PARTS

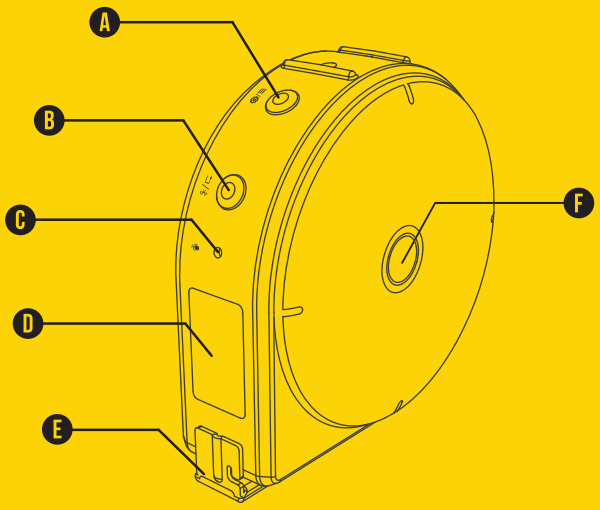

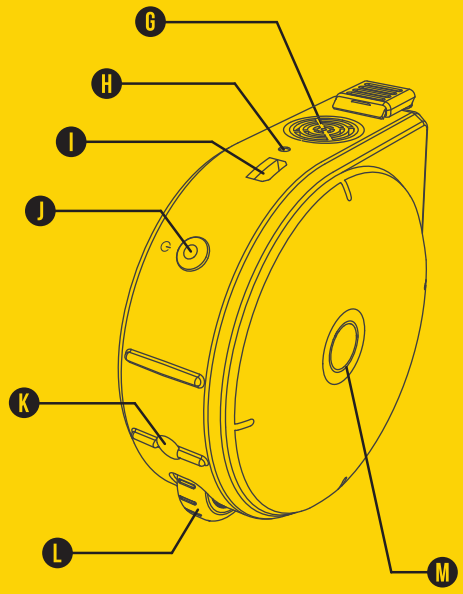

- A MODE/SETTINGS BUTTON
- B CANCEL/BLUETOOTH BUTTON
- C MICROPHONE
- D DISPLAY
- E HOOK/STRING
- F SAVE BUTTON
- G ULTRASONIC SENSOR
- H LASER GUIDE
- I CHARGING PORT
- J POWER BUTTON
- K WHEEL GUIDE
- L WHEEL
- M LED STATUS INDICATOR

BAGEL

THE WORLD'S SMARTEST TAPE MEASURE

USER GUIDE

MEASURING

Bagel has three modes of measurement: String, Wheel, and Remote.

1. Turn the device on by pressing the J POWER BUTTON
2. Select a measurement mode (String/Wheel/Remote)
   - → Press the A MODE/SETTINGS BUTTON to enter mode menu.
   - → Press the A MODE/SETTINGS BUTTON again to switch between modes.

String Mode: Pull out the E HOOK/STRING.

Wheel Mode: Roll the L WHEEL in the direction guided by the wheel guide laser.

Remote Mode: Point the G ULTRASONIC SENSOR at the target of measurement.

SAVING & VIEWING MEASUREMENTS

You can save your measurement with a simple button click.

1. Press the F SAVE BUTTON once to save the measurement shown on the digital display.
2. On the "Voice Memo?" screen, use the L WHEEL or A MODE/SETTINGS BUTTON to select "Yes" in order to record a voice memo.
3. Alternatively, select "No" to save without a voice memo.

Adding a voice tag to your measurement is optional and you can always add or edit tags through Bagel's mobile app.

To view your measurements on the device:

1. Press and hold the F SAVE BUTTON to view logs .
2. Use the L WHEEL or A MODE/SETTINGS BUTTON to scroll through saved measurements.
3. To delete a measurement, press the F SAVE BUTTON and select "Yes".
4. To delete all measurements, hold the F SAVE BUTTON and select "Yes".
5. You can leave the menu by clicking the B CANCEL/BLUETOOTH BUTTON .

Factory default time zone may differ from yours. You can sync Bagel's time zone to yours by pairing the device with a smartphone (Section 03).

SENDING DATA

To pair Bagel with your smartphone:

1. Download and install the Bagel Labs mobile app from http://www.bagel-labs.com.
2. Press and hold the B CANCEL/BLUETOOTH BUTTON to enter pairing mode on Bagel.
3. "Pairing..." should show up on the digital display.

After pairing is complete, we recommend running the app tutorial to learn how to pair and sync Bagel's data.

SETTINGS

Changing the Unit of Measure

1. Press and hold the A MODE/SETTINGS BUTTON to enter settings menu.
2. Scroll through menus using the L WHEEL or A MODE/SETTINGS BUTTON to highlight [Units].
3. Press the F SAVE BUTTON to enter.
4. Use the L WHEEL or A MODE/SETTINGS BUTTON to select [cm], [in], or [mm].
5. Press the F SAVE BUTTON to save and exit. Or, press the B CANCEL/BLUETOOTH BUTTON to return to settings menu without saving.

Turning Laser Guide ON/OFF

1. Press and hold the A MODE/SETTINGS BUTTON to enter settings menu.
2. Scroll through menus to highlight [Laser] and enter.
3. Select [On] or [Off].
4. Press the F SAVE BUTTON to save and exit. Or, press the B CANCEL/BLUETOOTH BUTTON to return to settings menu without saving.

Setting Inside/Outside Measurements

By default, Bagel's measurements start from 0 (Offset setting OFF). If you want to make inside measurements, e.g. length of window sill, you can set Bagel to offset mode (Offset setting ON). Then, Bagel's measurements will start from 8cm (3.15"), which is the diameter of Bagel.

1. Press and hold the A MODE/SETTINGS BUTTON to enter settings menu.
2. Scroll through menus to highlight [Offset] and enter.
3. Select [On] or [Off].
4. Press the F SAVE BUTTON to save and exit. Or, press the B CANCEL/BLUETOOTH BUTTON to return to return to settings menu without saving.

CHARGING

Charging the battery before use is recommended but not required.
Bagel ships pre-charged but initial charge will vary.

To charge Bagel, simply connect the included micro USB cable to the I CHARGING PORT.
The M LED STATUS INDICATOR should turn red while charging.

Bagel will display "Low battery" at 5%.

Full discharge of the battery can reset the Real Time Clock (RTC) and cause time inaccuracy. To resynchronize time, pair Bagel with its mobile app.

This device can be operated while charging.

NOTE: The micro USB port is for charging purpose only and does not support data transfer.

SPECIFICATION

Dimensions	80 x 80 x 30mm (L x W x H)
Weight	118g
Voltage	Input: 5V DC / Driving: 3.3V DC
Display	0.96" OLED (128x64)
Storage Capacity	32MB
Battery	Built-in rechargeable Li-Po (500mAh, 3.7V DC)
Wireless Connectivity	Bluetooth 4.0 BLE (Only)
Bluetooth Frequency	2.4GHz
Laser	Voltage: 3V DC / Current: <25mA Wavelength: 660nm Red / Class 2
Materials	Polycarbonate Casing / Dyneema String
Compatible OS	Android, iOS
Measurement Range	String: 0-290cm (0-9' 6'') Wheel: 0-999cm (0-32' 9'') Remote: 30cm-500cm (1'-16' 4'')
Measurement Accuracy	String: ±5mm * Wheel: ±0.5% Remote: ±0.5% + 1 digit **

* For measurements within 0.0 - 280cm (0.0 - 110in). Error may be larger for longer lengths.
** At -10˚C – 60 ˚C (14 ˚F - 140 ˚F) ; Effectual Angle: 45 ˚

SAFETY RULES (1)

Read all instructions. Failure to follow all instructions listed below may result in hazardous radiation exposure, electric shock, fire, choking and/or serious injury.
Use of controls or adjustments other than those specified herein may result in hazardous radiation exposure.

Have the device repaired only through qualified specialist using original spare parts.
This ensures that the safety of the device is maintained.

DO NOT use this device for any purpose other than those outlined in this manual.

DO NOT leave the device “ON” unattended in any normal operating mode.

DO NOT disassemble the device. There are no user serviceable parts inside.
Disassembling the device will void all warranties on the device.

DO NOT modify the device in any way. Modifying the device may result in hazardous laser radiation exposure.

SAFETY RULES (2)

LASER CLASSIFICATION:

This device produces visible laser beams, which are emitted from the instrument:
It is a Class 2 laser product in accordance with EN 60825-1: 2007 “Safety of Laser Product”.

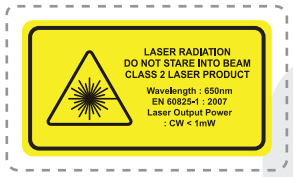

LASER CLASS 2 PRODUCTS:

Do not stare into the laser beam or direct it towards other people unnecessarily.
Eye protection is normally afforded by aversion responses including the blink reflex.

NEVER aim the beams at a workplace with a reflective surface. Bright shiny reflective sheet steel or similar reflective surfaces are not recommended for laser use.
Reflective surfaces could direct the beams back towards the operator.

DO NOT allow children to use the device without supervision.
The string can cause strangulation and children could unintentionally blind other persons.

The use of optical instruments with this device will increase eye hazards.

OPERATION & MAINTENANCE

DO NOT subject the device to extreme temperatures or variations in temperature.
Avoid heavy impact or falling of the device.
DO NOT use the string on sharp edges.
DO NOT expose the device to continuous vibration.
DO NOT expose the device to extremely hot or cold temperatures.
Always store the device indoors.
Always keep the device free of dust, water, and direct sunlight.
Clean the tool with a damp cloth.
Full discharge of the battery can reset the Real Time Clock (RTC) and cause time inaccuracy.

String mode accuracy can be influenced by the speed of pull and retraction. Avoid pulling the string too quickly or completely letting it go to ensure maximum accuracy. Pulling the string no faster than 50 cm/s (20 in/s) and retracting no faster than 10 cm/s (4 in/s) is required for accuracy.

DO NOT use excessive force to pull the string over 290cm (9’ 8”). This may permanently damage the device.

When you retract the string too quickly, Bagel will display "!", notifying that the measurement may be out of its accuracy range. In this case, you can press the A MODE/SETTINGS BUTTON to reset Bagel's measurement to zero.

In string mode, the digital display may sometimes malfunction due to string tension affecting Bagel's sensor. This is a temporary glitch and you can fix it by restarting the device.

REGULATORY NOTICE

FCC COMPLIANCE STATEMENT:
This device complies with Part 15 of the FCC Rules.
Operation is subject to the following two conditions:
(1) This device may not cause harmful interference, and (2) this device must accept any interference received, including interference that may cause undesired operation.

FCC ID : 2AJ8I-BAGEL001

INFORMATION TO USER:
This equipment has been tested and found to comply with the limits for a Class B digital device, pursuant to Part 15 of FCC Rules. These limits are designed to provide reasonable protection against harmful interference in a residential installation.
This equipment generates, uses, and can radiate radio frequency energy. If not installed and used in accordance with the instructions, it may cause harmful interference to radio communications. However, there is no guarantee that interference will not occur in a particular installation. If this equipment does cause harmful interference to radio or television reception, which can be determined by tuning the equipment off and on, the user is encouraged to try and correct the interference by one or more of the following measures:

- Reorient or relocate the receiving antenna.
- Increase the distance between the equipment and the receiver.
- Connect the equipment to outlet on a circuit different from that to which the receiver is connected.
- Consult the dealer or an experienced radio/TV technician for help.

WARNING:
Changes or modifications (including on the antenna) not expressly approved by the party responsible for compliance could void the user’s authority to operate the equipment.

LIMITED WARRANTY

Bagel Labs (“Seller”) warrants to the original purchaser only, that Bagel Smart Tape Measure will be free from defects in material or workmanship for a period of one (1) year from date of purchase.

SELLER’S SOLE OBLIGATION AND YOUR EXCLUSIVE REMEDY under this Limited Warranty and, to the extent permitted by law, any warranty or condition implied by law, shall be the repair of replacement of parts, without charge, which are defective in material or workmanship and which have not been misused, carelessly handled, or misrepaired by persons other than Seller or Authorized Service Center. To make a claim under this Limited Warranty, you must return the complete Bagel Smart Tape Measure, transportation prepaid, to any Seller’s Factory Service Center or Authorized Service Center. Please include a dated proof of purchase with your tool. For locations of service centers visit http://www.bagel-labs.com. THIS LIMITED WARRANTY DOES NOT APPLY TO OTHER ACCESSORY ITEMS AND RELATED ITEMS.

BAGEL LABS

www.bagel-labs.com

Building 3, 289 Street Pangyo-ro, Bundang-gu,
Seongnam-si, Gyeonggi-do, South Korea

BAGEL

THE WORLD’S SMARTEST TAPE MEASURE