**Not all features are shown in this drawing.
For more detailed information, please contact
your Fair-Rite representative.

UNCONTROLLED COPY WHEN PRINTED

SIZE	PART NO.	REV.
B	0461184851	~

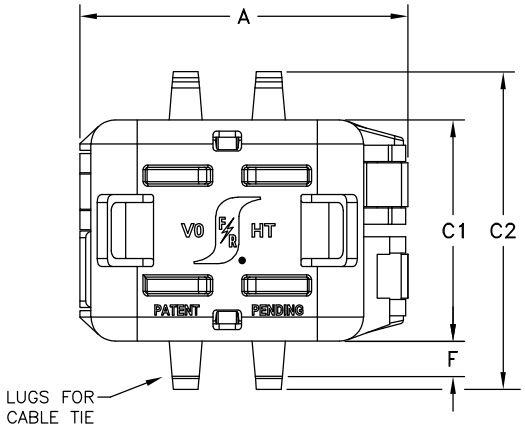

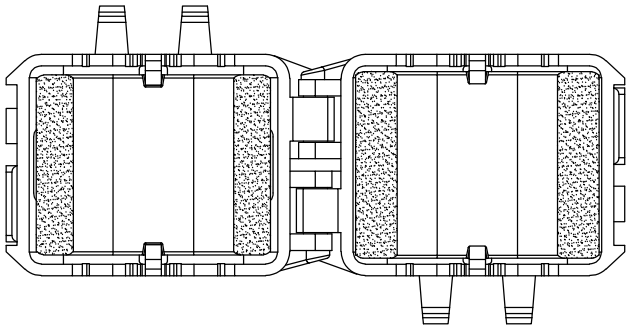

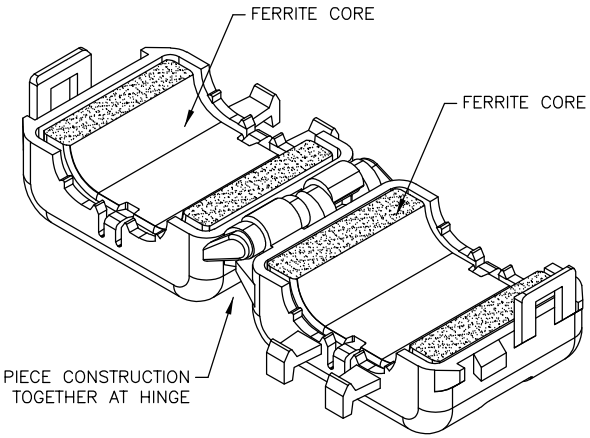

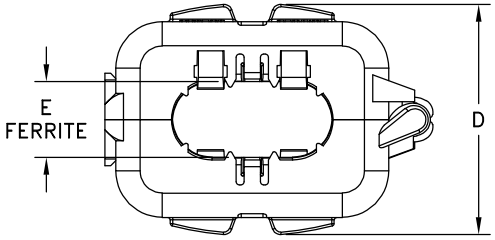

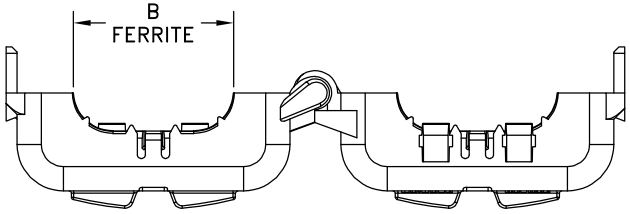

NOTES:

1 – COMPONENTS NEEDED FOR ASSEMBLY:
QTY: 2, FR#2661184855 FR#61 MATERIAL SPLIT CORE
QTY: 2, FR#0199184855 NYLON PA66 PLASTIC CASE
(UL94–V0)

A	B (MIN)	C1	C2
49.10/51.10	**24.50**	**32.8/34.8**	**47.50/49.50**
1.97	0.96	1.33	1.91

D	E (MIN)	F
34.17/36.17	**11.60**	**4.40/6.40**
1.38	0.46	0.21

ELECTRICAL SPECIFICATIONS

$\Sigma l/A(mm^{-1})$	$l_e(mm)$	$A_e(mm^2)$	$V_e(mm^3)$	$L_O(nH)/T^2$	IMPEDANCE (OHMS)		$A_L(nH)/T^2$
					100 MHz	250 MHz	100 KHz
0.546	91.9	168	15456	2.30	TBD Min.	TBD Min.	TBD Min.
					MEASURED ON E4991A/TF16092A		MEASURED WITH 5 TURNS

BOLD NUMBERS ARE IN MILLIMETERS,** LIGHT NUMBERS ARE IN INCHES.

FAIR–RITE PRODUCTS CORP.

TITLE: ASSEMBLY, SNAP–IT CASE

DRAWN BY	DATE	SIZE	PART NO.	REV.
J.CUSTY	04–22–25	B	0461184851	~
CHKD BY				
APPRVD BY		SCALE NONE	SHEET 1 of 1	