PS02/A0620/63 Datasheet

Product Name // Mains Filter Base Mount 6.3mm Tab Termination A0620 Filter (6A PS02/A L/C v2)

View Product Page



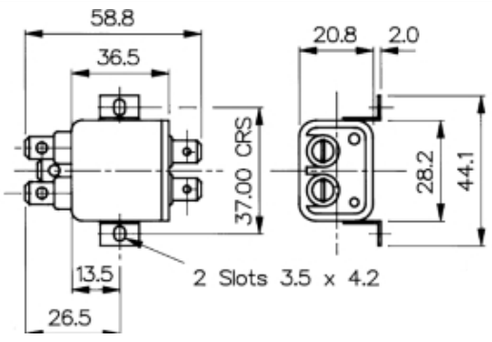

// Product Description:

- Standalone Mains Filter
- 6.3mm Tab Termination
- Choice of mounting type depending on part code:
- Part codes prefixed PS02/A: Base Mount
- Part codes prefixed PS03/A: Bulkhead Mount
- Choice of 1A, 3A, 6A, 10A current ratings and three alternative filter L/C circuits depending on part code starting /A - see data for details

// General Information:

Product Display Title:	Standalone Mains Filter
Product Family:	IEC Connectors
Product Series:	Mains Filters
Approvals:	CSA, ENEC, UL, VDE
Current Max:	6A
Filter Type:	6A PS02/A L/C v2
Flamability Rating:	UL94V-0
Function:	Mains Filter
Iec Filter Options:	A0620
Inlet Type:	IEC Inlet
Max Operating Temperature:	+85°C
Min Operating Temperature:	-25°C
Voltage Max:	250V

// Product PDF Links

Mains Filters product data

// Product 3D CAD Model Links

PS02/A0620/633D CAD Model