

DETAIL: A

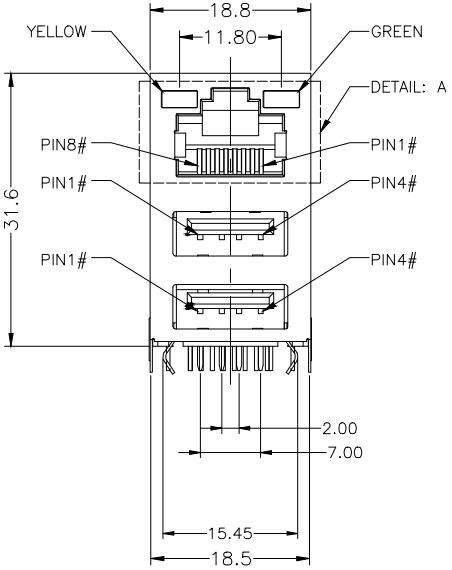

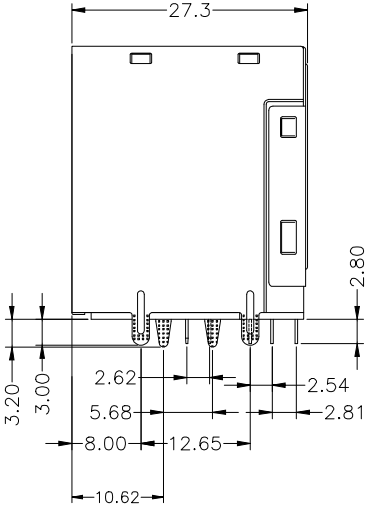

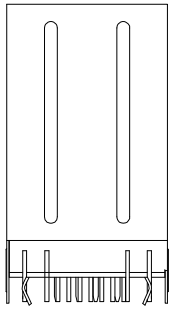

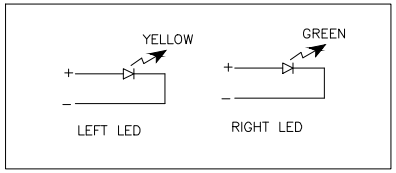

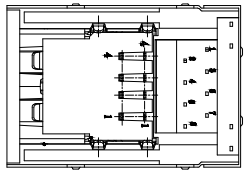

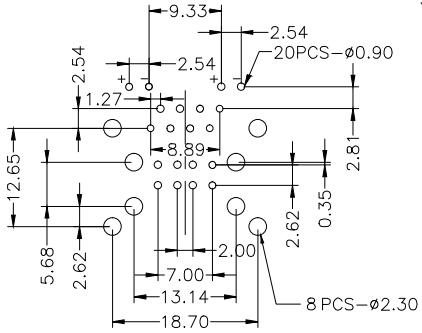

RECOMMENDED P.C.B LAYOUT(PCB THICKNESS: 1.6mm)
COMPONENT SIDE VIEW(TOLERANCE: ±0.05)

NOTES:
1. MATERIAL:
   1.1 HOUSING: PBT+30%G.F
   1.2 CONTACT
      1.2.1 USB MIDDLE SHEEL: SPCC,T=0.30±0.02mm
      1.2.2 USB CONTACT: BRASS C2680, T=0.25±0.02mm
      1.2.3 USB SHELL: SPCC, T=0.30±0.02mm
      1.2.4 RJ45 CONTACT: BRASS, C2680–H, T=0.30±0.02mm
      1.2.5 RJ SHELL: SPCC, T=0.30±0.02mm
2. PLATING:
   2.1 RJ45 SHELL:
      30u" Min. NICKEL PLATING OVER COPPER UNDERPLATING OVERALL
   2.2 USB SHELL:
      30u" Min. NICKEL PLATING OVER COPPER UNDERPLATING OVERALL
   2.3 USB AND RJ45 CONTACT:
      GOLD PLATING ON CONTACT AREA
      80u' MATTE TIN PLATING ON SOLDER TAIL AREA
      30u" NICKEL UNDERPLATING OVERALL
3. SPECIFICATION: (USB)
   3.1 CURRENT RATING: 1.5AMPS.
   3.2 VOLTAGE RATING: 30V AC.
   3.3 CONTACT RESISTANCE: 30mΩ MAX.
   3.4 INSULATION RESISTANCE: 1000MΩ MIN.
   3.5 DIELECTRIC WITHSTANDING VOLTAGE: 500V AC PER MINUTE
   3.6 DURABILITY: 1500 CYCLE.
   3.7 OPERATING TEMPERTATURE : –40°C TO +105°C.
4. SPECIFICATION: (RJ45)
   4.1 CURRENT RATE: 1.5 AMPS.
   4.2 VOLTAGE RATING: 30V AC.
   4.3 CONTACT RESISTANCE: 30mΩ MAX.
   4.4 INSULATOR RESISTANCE: 1000MΩ MIN. AT 500V DC.
   4.5 DIELECTRIC STRENGTH: 1000V PER MINUTE.
   4.6 DURABILITY: 750 CYCLE.
   4.7 OPERATION TEMPERATURE: –40°C TO +105°C.
5. NOTES:
   5.1 RESISTANCE TO SOLDERING HEAT: 265°C FOR 5 SECONDS, AND ONLY FOR WAVE SOLDERING PROCESS.

Order Code:

① A-MJU-8-RA-xTP-SGY1

K = Gold flash selective tin
P = 15u" Au/Sn
H = 30u" Au/Sn

RoHS compliant
Unit: mm

Scale	Free
TOLERANCE	
X.X	±0.30
X.XX	±0.20
X.XXX	±0.10
DIM	TOL
X.XX	±2°
X.X	±3°
Angle	TOL

Id.	Modification	Date	Name
②	Update	24.07.2024	Luca
①	Add new PNs for new plating	02.06.2021	Luca
⓪	Drawn	01.04.2019	Amy

	Date	Name
Drawn	01.04.2019	Amy
Approved	24.07.2024	Luca

ASSMANN WSW components
A company of BCS

Description: RJ45 Modular + USB 2.0 Type A Female / THT / R/A

ASSMANN WSW-No.
① A-MJU-8-RA-xTP-SGY1

Drawing-No.
ASS 8368 CO

rev02

Customer-No.

Sheet

CSV19010
SV5068