1 Description

The Coto 2300 series is designed to offer the densest packaging available in a multipole reed relay. The size and footprint of the 2300 series complement the 2200 & 2900 series relays. The 1 Form C model is constructed with individual switch capsules for the normally open and magnetically-biased normally closed contacts which are more reliable than the spring actuated 1 Form C reed switches. Custom pin-outs as well as custom designs are available to meet particular applications.

Device Packages

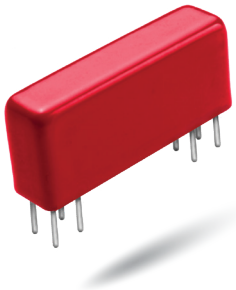

2 Features

- Multi-Pole Relay - Up to 3 Form A or 2 Form C Contacts
- Smallest Multi-pole Relay: 0.056 sq. inches/pole (3 pole relay)
- Potting technology to minimize internal component stress
- Magnetically Shielding Steel Shell
- High reliability, hermetically sealed contacts for long life
- High speed switching compared to electromechanical relays
- Optional Electrostatic Shield (on models 2332 &2341)
- RoHS compliant

3 Applications

- Automated Test Equipment
- Instrumentation
- Telecommunications

4 Dimensions

In Inches (Millimeters)

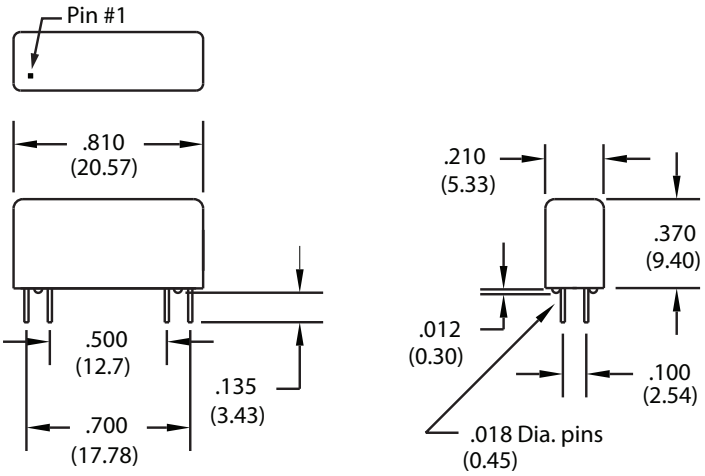

Schematics

(Top View)

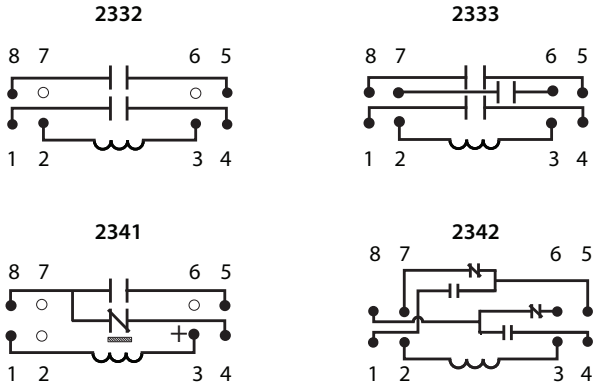

Note: Blank pins shown in the schematics are not physically present unless used for an Electrostatic Shield (connected to one pin) or a Coaxial Shield (connected to two pins). See the General Notes section under the Parameters Table for shield pin assignments.

5 Ordering Information

23XX-XX-0X0

Part Number

Model Number
2332 (2 Form A)
2333 (3 Form A)
2341 (1 Form C)
2342 (2 Form C)

Coil Voltage
05=5 volts
12=12 volts

Shielding Options[1]
0=No Shielding
1=Electrostatic Shield
2=Coaxial Shield

1 - Option 1 & 2 are available only on Models 2332 & 2341.

Copyright 2025. All rights reserved.

6 Parameters - Model Number 2300

Parameters	Test Conditions	Units	2332[1] 2 Form A	2333 3 Form A	2341[1,2,4] 1 Form C	2342 2 Form C
Coil Specs.						
Nom. Coil Voltage		VDC	5.0 12.0		5.0 12.0	5.0 12.0
Coil Resistance	+/- 10%, 25°C	Ω	175 1000		230 1000	175 1000
Operate Voltage	Must Operate By	VDC - Max.	3.8 9.0		3.8 9.0	3.8 9.0
Release Voltage	Must Operate By	VDC - Min.	0.4 1.0		0.4 1.0	0.4 1.0
Contact Ratings						
Switching Voltage	Max DC/Peak AC Resist.	Volts	200		200	100
Switching Current	Max DC/Peak AC Resist.	Amps	0.5		0.5	0.25
Carry Current	Max DC/Peak AC Resist.	Amps	1.5		1.5	0.5
Contact Rating	Max DC/Peak AC Resist.	Watts	10		10	3
Life Expectancy - Typical[3]	Signal Level 1.0V, 10mA	x 10^6 Ops.	500		500	100
Static Contact Resistance (Max. Init.)	50mV, 10mA	Ω	0.150		0.150	0.200
Dynamic Contact Resistance (Max. Init.)	0.5V, 50mA at 100Hz, 1.5msec.	Ω	0.200		0.200	0.250
Relay Specifications						
Insulation Resistance (Min.)	Between all Isolated Pins at 100V, 25°C, 40%RH	Ω	10^{12}	10^{12}	10^{12}	10^9
Capacitance - Typical Across Open Contacts	No Shield Shield Guarding	pF	0.8 0.2	0.8 N/A	1.7 0.7	2.0 N/A
Dielectric Strength (Min.)	Between Contacts Contacts to Shield Contacts/Shield to Coil	VDC/peak AC	250 1000 1000	250 N/A 1000	250 1000 1000	200 N/A 1000
Operate Time - Including Bounce - (Max.)	At Nominal Coil Voltage, 30Hz, Square Wave	msec.	0.5	0.5	0.5	1.5
Release Time - (Max.)		msec.	0.15	0.15	0.5	2.0

General Notes:

1. On Model 2332 and 2341, shielded versions are available. Electrostatic shield is connected to pin #6. Coaxial shield is connected to pins #6 and #7.
2. Break-before-make action on Form C Model 2341 is not guaranteed. Consult factory if break-before-make is required.
3. Consult factory for life expectancy at other switch loads.
4. Model 2341 is polarity sensitive. The positive terminal of the applied coil voltage must be connected to Pin #3.

Environmental Ratings:

Storage Temp: -35°C to +100°C; Operating Temp: -20°C to +85°C
Vibration: 20 G's to 2000 Hz; Shock: 50 G's
All electrical parameters measured at 25°C unless otherwise specified.

Copyright 2026. All rights reserved.

7 Package Information

Plastic Tube Dimensions

- 25 relays per tube

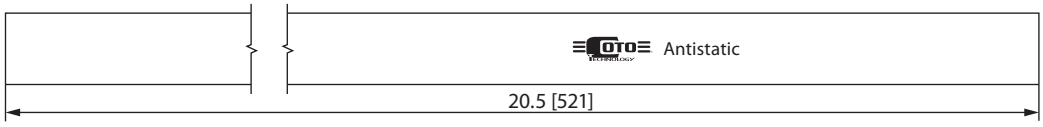

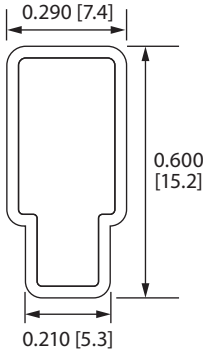

8 Relay Processing Notes

8.1 Soldering

Relays can be soldered by hand or by wave solder processing. Coto Technology recommends the maximum wave solder temperature (measured at the relay leads) as 270°C for 10 seconds. Temperature and time in excess of the recommended levels may result in damage to the relay. All our through-hole relays are compatible with either SAC alloy or eutectic soldering process.

8.2 Cleaning

2300 is designed and manufactured to provide an adequate seal from external conditions. However, caution must be taken during the cleaning process not to expose the relays to conditions that will allow moisture to permeate into the package. Caution should be taken with dwell time between reflow and cleaning, high pressure spraying, and time in cleaning solvent/aqueous solutions, as these cleaning process parameters can contribute to moisture permeation. Board level bake out may be required after wash to remove moisture that has been introduced during cleaning operations.

8.3 Relay Storage

Relay parametric specifications are specified at 25°C and 40% RH. Reduced relay performance may result if storage or use environments significantly exceed these conditions. If high insulation resistance is required, Coto Technology recommends that relay storage, processing, and use environments are adequate to achieve the desired results. Relays should be stored in similar environmental conditions as other high-reliability active and passive electronic components. Proper storage of relays is also important to maintain solderability over an extended period of time.

8.4 Handling

Relays should be handled with care. Dropping or mishandling relays may result in damage that can contribute to a direct failure or, even worse, a latent field failure. If relays are dropped, Coto Technology recommends that they should be discarded.

Coto Technology does not recommend use of ultrasonic activated equipment with relays. The use of ultrasonic equipment may change the characteristics of the relay and can contribute to failure.

Access our Technical Application Notes Section.

For recommendations and best practices for Form C relays click here:

Copyright 2025. All rights reserved.

9 IMPORTANT NOTICE AND DISCLAIMER

COTO TECHNOLOGY, INC. ("COTO") PROVIDES THIS DATA SHEET "AS IS" AND WITH ALL FAULTS, AND DISCLAIMS ANY AND ALL WARRANTIES, EXPRESS AND IMPLIED, WITH RESPECT TO INFORMATION SET FORTH HEREIN, INCLUDING, WITHOUT LIMITATION, ANY IMPLIED WARRANTIES OF ACCURACY, COMPLETENESS, MERCHANTABILITY, FITNESS FOR A PARTICULAR PURPOSE AND NON-INFRINGEMENT OF THIRD-PARTY INTELLECTUAL PROPERTY RIGHTS. Your receipt of this data sheet constitutes your acknowledgement and acceptance of, and agreement to, all of the terms, conditions, notes, notices, disclaimers and limitations set forth herein.

This data sheet is subject to change without notice. Coto reserves the right to make, from time to time, changes to specifications set forth herein as may be necessary or desirable to improve the performance, reliability and/or manufacturability of the products described herein. As such, before placing an order of any Coto product described herein, you must verify that the information set forth herein is current with respect to such product, and Coto assumes no responsibility for any damages which you may incur due to your failure to do so.

Coto grants you permission to use this data sheet only for information and reference purposes, and any other use of this data sheet by you is prohibited. No license to any intellectual property right of Coto or any third party is granted hereunder.
You are solely responsible for (1) deciding whether to purchase or use any Coto product, (2) selecting appropriate Coto products for your application, (3) designing, validating and testing your application incorporating or involving any Coto product and (4) ensuring that such application meets applicable safety, security, regulatory or other requirements or standards. Any purchase or use of any Coto product must fully comply with all applicable laws and regulations, including, without limitations, import and export regulations.

Coto products described herein have been designed, developed and manufactured to be used in the standard commercial applications similar to those shown herein ("Specific Applications"). Any application requiring measures of reliability, robustness, safety or certifications not shown or beyond those shown herein is at the user's risk and is not warranted or guaranteed by Coto. Therefore, you are advised to use Coto products described herein only in Specific Applications.

Your purchase and use of Coto products, including, without limitation, those products described herein, are subject to Coto's terms and conditions of sale and other applicable terms available on Coto's website or otherwise provided or made available in conjunction with such products. Unless such terms and conditions state otherwise, COTO PRODUCTS ARE PROVIDED "AS IS" AND WITH ALL FAULTS, AND ANY AND ALL WARRANTIES, EXPRESS AND IMPLIED, WITH RESPECT TO SUCH PRODUCTS, INCLUDING, WITHOUT LIMITATION, ANY IMPLIED WARRANTIES OF MERCHANTABILITY, FITNESS FOR A PARTICULAR PURPOSE AND NON-INFRINGEMENT OF THIRD-PARTY INTELLECTUAL PROPERTY RIGHTS, ARE DISCLAIMED. Coto's provision of this data sheet does not expand or otherwise alter Coto's applicable warranties or warranty disclaimers for Coto products.

Coto disclaims responsibility for, and you will fully defend, indemnify and hold harmless Coto, its affiliates and its and their respective equity holders, directors, officers, employees, representatives, agents, successors and assigns against and for, any and all claims, damages, costs, losses and liabilities arising out of your use of this data sheet or your purchase or use of any Coto product described herein.