Octal Buffer/Line Driver with 3-STATE Outputs

74AC244, 74ACT244

General Description

The AC/ACT244 is an octal buffer and line driver designed to be employed as a memory address driver, clock driver and bus−oriented transmitter/receiver which provides improved PC board density.

Features

- I_{CC} and I_{OZ} Reduced by 50%
- 3−STATE Outputs Drive Bus Lines or Buffer Memory Address Registers
- Outputs Source/Sink 24 mA
- ACT244 has TTL−Compatible Inputs

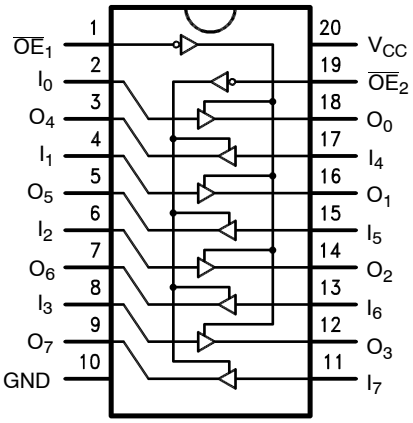

Figure 1. Connection Diagram

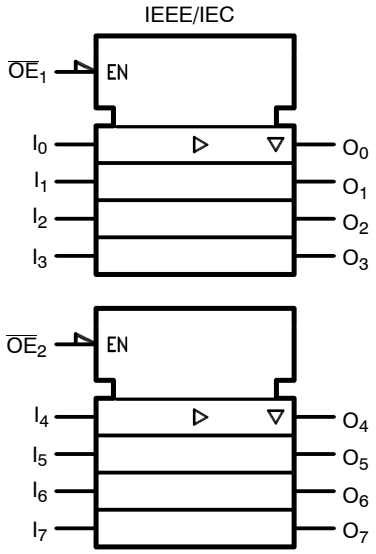

Figure 2. Logic Symbol

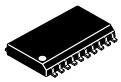

SOIC−20, 300 mils
CASE 751BJ

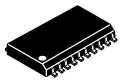

SOIC−20 WB
CASE 751D−05

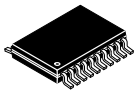

TSSOP−20 WB
CASE 948E

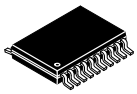

TSSOP20, 4.4 x 6.5
CASE 948AQ

MARKING DIAGRAMS

SOIC−20

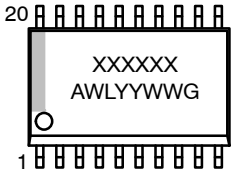

XXXXXX	= Specific Device Code
A	= Assembly Location
WL	= Wafer Lot
YY	= Year
WW	= Work Week
G	= Pb−Free Package

TSSOP−20

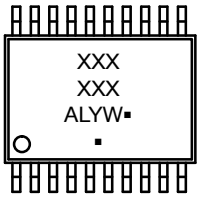

XXXXXX	= Specific Device Code
A	= Assembly Location
L	= Wafer Lot
Y	= Year
W	= Work Week
▪	= Pb−Free Package

(Note: Microdot may be in either location)

ORDERING INFORMATION

See detailed ordering and shipping information in the package dimensions section on page 6 of this data sheet.

© Semiconductor Components Industries, LLC, 1988

PIN DESCRIPTION

Pin Name	Description
$\overline{OE}_1$, $\overline{OE}_2$	3−STATE Output Enable Inputs
I_0−I_7	Inputs
O_0−O_7	Outputs

TRUTH TABLE

Inputs		Outputs
$\overline{OE}_1$	I_n	(Pins 12, 14, 16, 18)
L	L	L
L	H	H
H	X	Z

NOTE: X = Immaterial, Z = High Impedance

TRUTH TABLE (continued)

Inputs		Outputs
$\overline{OE}_2$	I_n	(Pins 3, 5, 7, 9)
L	L	L
L	H	H
H	X	Z

ABSOLUTE MAXIMUM RATINGS

Parameter	Symbol	Rating	Unit
Supply Voltage	V_{CC}	−0.5 to +6.5	V
DC Input Diode Current V_I = −0.5 V	I_{IK}	−20	mA
V_I = V_{CC} + 0.5		+20	
DC Input Voltage	V_I	−0.5 to V_{CC} + 0.5	V
DC Output Diode Current V_O = −0.5 V	I_{OK}	−20	mA
V_I = V_{CC} + 0.5 V		+20	
DC Output Voltage	V_O	−0.5 to V_{CC} + 0.5	V
DC Output Source or Sink Current	I_O	±50	mA
DC V_{CC} or Ground Current per Output Pin	I_{CC} or I_{GND}	±50	mA
Storage Temperature	T_{STG}	−65 to +150	°C
Junction Temperature	T_J	140	°C

Stresses exceeding those listed in the Maximum Ratings table may damage the device. If any of these limits are exceeded, device functionality should not be assumed, damage may occur and reliability may be affected.

RECOMMENDED OPERATING CONDITIONS

Parameter	Symbol	Rating	Unit
Supply Voltage AC	V_{CC}	2.0 to 6.0	V
ACT		4.5 to 5.5	
Input Voltage	V_I	0 to V_{CC}	V
Output Voltage	V_O	0 to V_{CC}	V
Operating Temperature	T_A	−40 to +85	°C
Minimum Input Edge Rate, AC Devices: V_{IN} from 30% to 70% of V_{CC}, V_{CC} @ 3.3 V, 4.5 V, 5.5 V	$\Delta V / \Delta t$	125	mV/ns
Minimum Input Edge Rate, ACT Devices: V_{IN} from 0.8 V to 2.0 V, V_{CC} @ 4.5 V, 5.5 V	$\Delta V / \Delta t$	125	mV/ns

Functional operation above the stresses listed in the Recommended Operating Ranges is not implied. Extended exposure to stresses beyond the Recommended Operating Ranges limits may affect device reliability.

Share Feedback
Your Opinion Matters

DC ELECTRICAL CHARACTERISTICS FOR AC

Symbol	Parameter	V_{CC}(V)	Conditions	T_A = +25°C		T_A = −55°C to +125°C	T_A = −40°C to +85°C	Unit
				Typ	Guaranteed Limits			
V_{IH}	Minimum HIGH Level Input Voltage	3.0	V_{OUT} = 0.1 V or V_{CC} − 0.1 V	1.5	2.1	2.1	2.1	V
		4.5		2.25	3.15	3.15	3.15	
		5.5		2.75	3.85	3.85	3.85	
V_{IL}	Maximum LOW Level Input Voltage	3.0	V_{OUT} = 0.1 V or V_{CC} − 0.1 V	1.5	0.9	0.9	0.9	V
		4.5		2.25	1.35	1.35	1.35	
		5.5		2.75	1.65	1.65	1.65	
V_{OH}	Minimum HIGH Level Output Voltage	3.0	I_{OUT} = −50 μA	2.99	2.9	2.9	2.9	V
		4.5		4.49	4.4	4.4	4.4	
		5.5		5.49	5.4	5.4	5.4	
		3.0	V_{IN} = V_{IL} or V_{IH}, I_{OH} = 12 mA		2.56	2.40	2.46	
		4.5	V_{IN} = V_{IL} or V_{IH}, I_{OH} = 24 mA		3.86	3.70	3.76	
		5.5	V_{IN} = V_{IL} or V_{IH}, I_{OH} = 24 mA (Note 1)		4.86	4.70	4.76	
V_{OL}	Maximum LOW Level Output Voltage	3.0	I_{OUT} = 50 μA	0.002	0.1	0.1	0.1	V
		4.5		0.001	0.1	0.1	0.1	
		5.5		0.001	0.1	0.1	0.1	
		3.0	V_{IN} = V_{IL} or V_{IH}, I_{OL} = 12 mA		0.36	0.50	0.44	
		4.5	V_{IN} = V_{IL} or V_{IH}, I_{OL} = 24 mA		0.36	0.50	0.44	
		5.5	V_{IN} = V_{IL} or V_{IH}, I_{OL} = 24 mA (Note 1)		0.36	0.50	0.44	
I_{IN} (Note 2)	Maximum Input Leakage Current	5.5	V_I = V_{CC}, GND		±0.1	±1.0	±1.0	μA
I_{OZ}	Maximum 3−STATE Leakage Current	5.5	V_I (OE) = V_{IL}, V_{IH}; V_I = V_{CC}, V_{GND}; V_O = V_{CC}, GND		±0.25	±5.0	±2.5	μA
I_{OLD}	Minimum Dynamic Output Current (Note 3)	5.5	V_{OLD} = 1.65 V Max.			50	75	mA
I_{OHD}		5.5	V_{OHD} = 3.85 V Min.			−50	−75	mA
I_{CC} (Note 2)	Maximum Quiescent Supply Current	5.5	V_{IN} = V_{CC} or GND		4.0	80.0	40.0	μA

1. All outputs loaded; thresholds on input associated with output under test.
2. I_{IN} and I_{CC} @ 3.0 V are guaranteed to be less than or equal to the respective limit @ 5.5 V V_{CC}.
3. Maximum test duration 2.0 ms, one output loaded at a time.

Share Feedback
Your Opinion Matters

DC ELECTRICAL CHARACTERISTICS FOR ACT

Symbol	Parameter	V_{CC}(V)	Conditions	T_A = +25°C		T_A = −55°C to +125°C	T_A = −40°C to +85°C	Unit
				Typ	Guaranteed Limits			
V_{IH}	Minimum HIGH Level Input Voltage	4.5	V_{OUT} = 0.1 V or V_{CC} − 0.1 V	1.5	2.0	2.0	2.0	V
		5.5		1.5	2.0	2.0	2.0	
V_{IL}	Maximum LOW Level Input Voltage	4.5	V_{OUT} = 0.1 V or V_{CC} − 0.1 V	1.5	0.8	0.8	0.8	V
		5.5		1.5	0.8	0.8	0.8	
V_{OH}	Minimum HIGH Level Output Voltage	4.5	I_{OUT} = −50 μA	4.49	4.4	4.4	4.4	V
		5.5		5.49	5.4	5.4	5.4	
		4.5	V_{IN} = V_{IL} or V_{IH}, I_{OH} = 24 mA		3.86	3.70	3.76	
		5.5	V_{IN} = V_{IL} or V_{IH}, I_{OH} = 24 mA (Note 4)		4.86	4.70	4.76	
V_{OL}	Maximum LOW Level Output Voltage	4.5	I_{OUT} = 50 μA	0.001	0.1	0.1	0.1	V
		5.5		0.001	0.1	0.1	0.1	
		4.5	V_{IN} = V_{IL} or V_{IH}, I_{OL} = 24 mA		0.36	0.50	0.44	
		5.5	V_{IN} = V_{IL} or V_{IH}, I_{OL} = 24 mA (Note 4)		0.36	0.50	0.44	
I_{IN}	Maximum Input Leakage Current	5.5	V_I = V_{CC}, GND		±0.1	±1.0	±1.0	μA
I_{OZ}	Maximum 3−STATE Leakage Current	5.5	V_I = V_{IL}, V_{IH}; V_O = V_{CC}, GND		±0.25	±5.0	±2.5	μA
I_{CCT}	Maximum I_{CC}/Input	5.5	V_I = V_{CC} − 2.1 V	0.6		1.6	1.5	mA
I_{OLD}	Minimum Dynamic Output Current (Note 5)	5.5	V_{OLD} = 1.65 V Max.			50	75	mA
I_{OHD}		5.5	V_{OHD} = 3.85 V Min.			−50	−75	mA
I_{CC}	Maximum Quiescent Supply Current	5.5	V_{IN} = V_{CC} or GND		4.0	80.0	40.0	μA

4. All outputs loaded; thresholds on input associated with output under test.
5. Maximum test duration 2.0 ms, one output loaded at a time.

Share Feedback
Your Opinion Matters

AC ELECTRICAL CHARACTERISTICS FOR AC

Symbol	Parameter	V_{CC} (V) (Note 6)	T_A = +25°C, C_L = 50 pF			T_A = −55°C to +125°C C_L = 50 pF		T_A = −40°C to +85°C C_L = 50 pF		Unit
			Min	Typ	Max	Min	Max	Min	Max	
t_{PLH}	Propagation Delay, Data to Output	3.3	2.0	6.5	9.0	1.0	12.5	1.5	10.0	ns
		5.0	1.5	5.0	7.0	1.0	9.5	1.0	7.5	
t_{PHL}	Propagation Delay, Data to Output	3.3	2.0	6.5	9.0	1.0	12.0	2.0	10.0	ns
		5.0	1.5	5.0	7.0	1.0	9.0	1.0	7.5	
t_{PZH}	Output Enable Time	3.3	2.0	6.0	10.5	1.0	11.5	1.5	11.0	ns
		5.0	1.5	5.0	7.0	1.0	9.0	1.5	8.0	
t_{PZL}	Output Enable Time	3.3	2.5	7.5	10.0	1.0	13.0	2.0	11.0	ns
		5.0	1.5	5.5	8.0	1.0	10.5	1.5	8.5	
t_{PHZ}	Output Disable Time	3.3	3.0	7.0	10.0	1.0	12.5	1.5	10.5	ns
		5.0	2.5	6.5	9.0	1.0	10.5	1.0	9.5	
t_{PLZ}	Output Disable Time	3.3	2.5	7.5	10.5	1.0	13.0	2.5	11.5	ns
		5.0	2.0	6.5	9.0	1.0	11.0	2.0	9.5	

6. Voltage range 3.3 is 3.3 V ± 0.3 V. Voltage range 5.0 is 5.0 V ± 0.5 V.

AC ELECTRICAL CHARACTERISTICS FOR ACT

Symbol	Parameter	V_{CC} (V) (Note 7)	T_A = +25°C, C_L = 50 pF			T_A = −55°C to +125°C C_L = 50 pF		T_A = −40°C to +85°C C_L = 50 pF		Unit
			Min	Typ	Max	Min	Max	Min	Max	
t_{PLH}	Propagation Delay, Data to Output	5.0	2.0	6.5	9.0	1.0	10.0	1.5	10.0	ns
t_{PHL}	Propagation Delay, Data to Output	5.0	2.0	7.0	9.0	1.0	10.0	1.5	10.0	ns
t_{PZH}	Output Enable Time	5.0	1.5	6.0	8.5	1.0	9.5	1.0	9.5	ns
t_{PZL}	Output Enable Time	5.0	2.0	7.0	9.5	1.0	11.0	1.5	10.5	ns
t_{PHZ}	Output Disable Time	5.0	2.0	7.0	9.5	1.0	11.0	1.5	10.5	ns
t_{PLZ}	Output Disable Time	5.0	2.0	7.5	10.0	1.0	11.5	2.0	10.5	ns

7. Voltage range 5.0 is 5.0 V ± 0.5 V.

CAPACITANCE

Symbol	Parameter	Conditions	Typ	Unit
C_{IN}	Input Capacitance	V_{CC} = OPEN	4.5	pF
C_{PD}	Power Dissipation Capacitance	V_{CC} = 5.0 V	45.0	pF

Share Feedback
Your Opinion Matters

ORDERING INFORMATION

Order Number	Marking	Package	Shipping†
74AC244SC	AC244	SOIC−20	38 / Tube
74AC244SCX	AC244	SOIC−20	1000 / Tape & Reel
74AC244MTC	AC 244	TSSOP−20	75 / Tube
74AC244MTCX	AC 244	TSSOP−20	2500 / Tape & Reel
74ACT244SC	ACT244	SOIC−20	38 / Tube
74ACT244SCX	ACT244	SOIC−20	1000 / Tape & Reel
74ACT244MTC	ACT 244	TSSOP−20	75 / Tube
74ACT244MTCX	ACT 244	TSSOP−20	2500 / Tape & Reel

†For information on tape and reel specifications, including part orientation and tape sizes, please refer to our Tape and Reel Packaging Specifications Brochure, BRD8011/D

Share Feedback
Your Opinion Matters

SOIC−20, 300 mils
CASE 751BJ
ISSUE O

DATE 19 DEC 2008

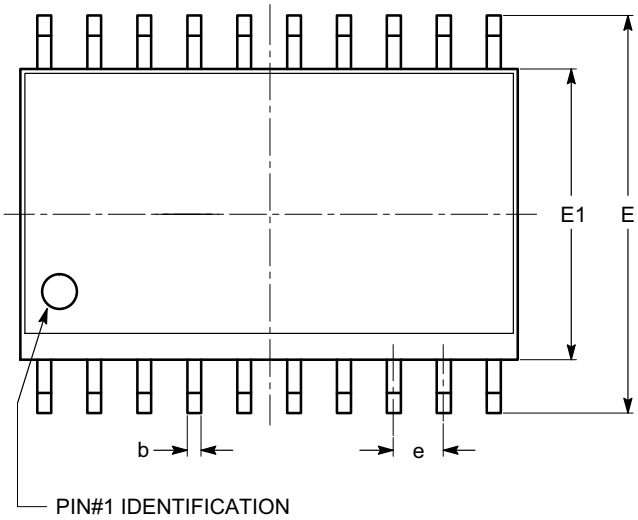

TOP VIEW

SYMBOL	MIN	NOM	MAX
A	2.36	2.49	2.64
A1	0.10		0.30
A2	2.05		2.55
b	0.31	0.41	0.51
c	0.20	0.27	0.33
D	12.60	12.80	13.00
E	10.01	10.30	10.64
E1	7.40	7.50	7.60
e	1.27 BSC		
h	0.25		0.75
L	0.40	0.81	1.27
θ	0º		8º
θ1	5º		15º

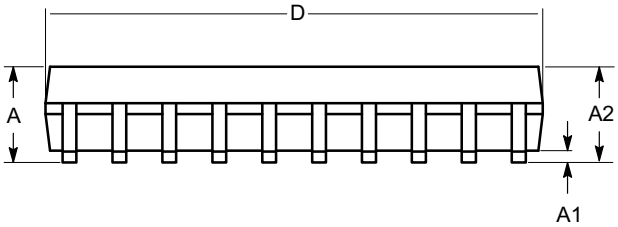

SIDE VIEW

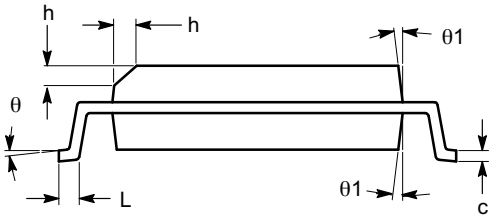

END VIEW

Notes:
(1) All dimensions are in millimeters. Angles in degrees.
(2) Complies with JEDEC MS-013.

DOCUMENT NUMBER:	98AON34287E	Electronic versions are uncontrolled except when accessed directly from the Document Repository. Printed versions are uncontrolled except when stamped "CONTROLLED COPY" in red.
DESCRIPTION:	SOIC−20, 300 MILS	PAGE 1 OF 1

onsemi and onsemi are trademarks of Semiconductor Components Industries, LLC dba **onsemi** or its subsidiaries in the United States and/or other countries. **onsemi** reserves the right to make changes without further notice to any products herein. **onsemi** makes no warranty, representation or guarantee regarding the suitability of its products for any particular purpose, nor does **onsemi** assume any liability arising out of the application or use of any product or circuit, and specifically disclaims any and all liability, including without limitation special, consequential or incidental damages. **onsemi** does not convey any license under its patent rights nor the rights of others.

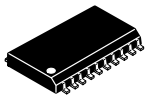

SCALE 1:1

SOIC−20 WB
CASE 751D−05
ISSUE H

DATE 22 APR 2015

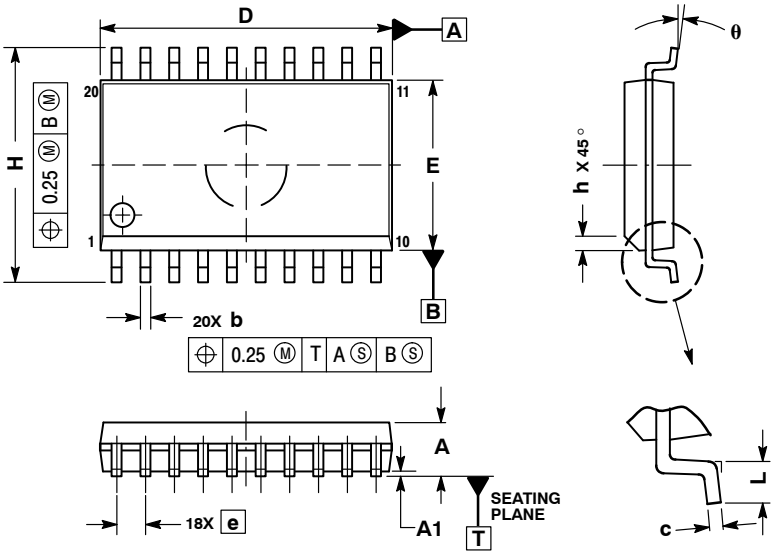

NOTES:
1. DIMENSIONS ARE IN MILLIMETERS.
2. INTERPRET DIMENSIONS AND TOLERANCES PER ASME Y14.5M, 1994.
3. DIMENSIONS D AND E DO NOT INCLUDE MOLD PROTRUSION.
4. MAXIMUM MOLD PROTRUSION 0.15 PER SIDE.
5. DIMENSION B DOES NOT INCLUDE DAMBAR PROTRUSION. ALLOWABLE PROTRUSION SHALL BE 0.13 TOTAL IN EXCESS OF B DIMENSION AT MAXIMUM MATERIAL CONDITION.

	MILLIMETERS	
DIM	MIN	MAX
A	2.35	2.65
A1	0.10	0.25
b	0.35	0.49
c	0.23	0.32
D	12.65	12.95
E	7.40	7.60
e	1.27 BSC	
H	10.05	10.55
h	0.25	0.75
L	0.50	0.90
θ	0°	7°

RECOMMENDED SOLDERING FOOTPRINT*

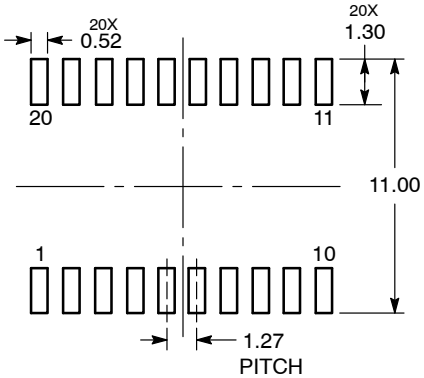

DIMENSIONS: MILLIMETERS

*For additional information on our Pb−Free strategy and soldering details, please download the **onsemi** Soldering and Mounting Techniques Reference Manual, SOLDERRM/D.

GENERIC MARKING DIAGRAM*

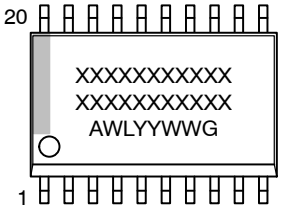

XXXXX = Specific Device Code
A = Assembly Location
WL = Wafer Lot
YY = Year
WW = Work Week
G = Pb−Free Package

*This information is generic. Please refer to device data sheet for actual part marking. Pb−Free indicator, "G" or microdot "▪", may or may not be present. Some products may not follow the Generic Marking.

DOCUMENT NUMBER:	98ASB42343B	Electronic versions are uncontrolled except when accessed directly from the Document Repository. Printed versions are uncontrolled except when stamped "CONTROLLED COPY" in red.
DESCRIPTION:	SOIC−20 WB	PAGE 1 OF 1

onsemi and onsemi are trademarks of Semiconductor Components Industries, LLC dba **onsemi** or its subsidiaries in the United States and/or other countries. **onsemi** reserves the right to make changes without further notice to any products herein. **onsemi** makes no warranty, representation or guarantee regarding the suitability of its products for any particular purpose, nor does **onsemi** assume any liability arising out of the application or use of any product or circuit, and specifically disclaims any and all liability, including without limitation special, consequential or incidental damages. **onsemi** does not convey any license under its patent rights nor the rights of others.

TSSOP20, 4.4x6.5
CASE 948AQ
ISSUE A

DATE 19 MAR 2009

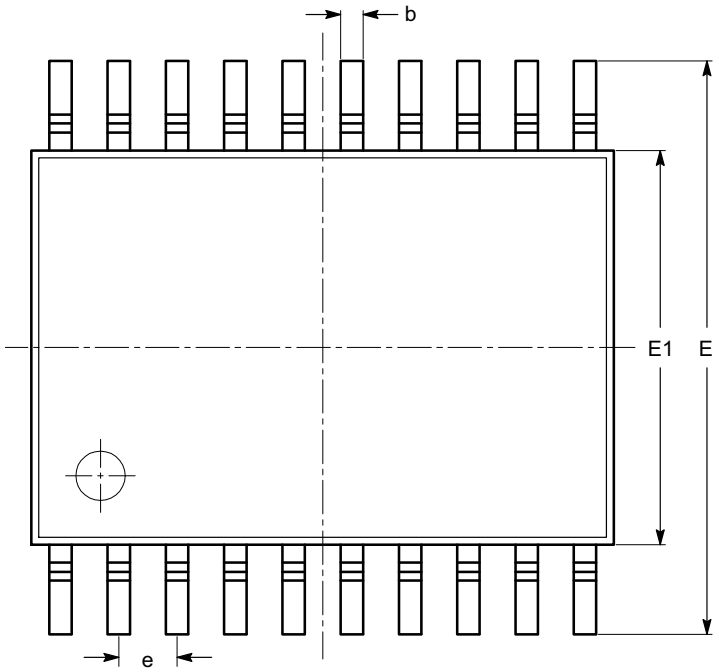

TOP VIEW

SYMBOL	MIN	NOM	MAX
A			1.20
A1	0.05		0.15
A2	0.80		1.05
b	0.19		0.30
c	0.09		0.20
D	6.40	6.50	6.60
E	6.30	6.40	6.50
E1	4.30	4.40	4.50
e		0.65 BSC	
L	0.45	0.60	0.75
L1		1.00 REF	
θ	0º		8º

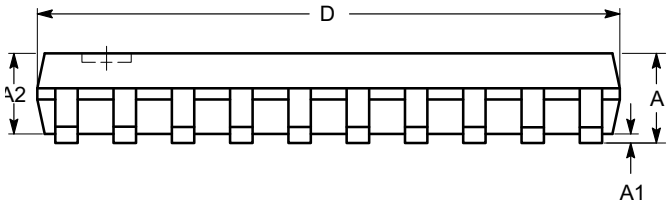

SIDE VIEW

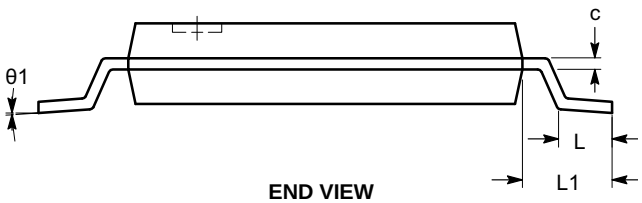

END VIEW

Notes:
(1) All dimensions are in millimeters. Angles in degrees.
(2) Complies with JEDEC MO-153.

DOCUMENT NUMBER:	**98AON34453E**	Electronic versions are uncontrolled except when accessed directly from the Document Repository. Printed versions are uncontrolled except when stamped "CONTROLLED COPY" in red.
DESCRIPTION:	**TSSOP20, 4.4X6.5**	**PAGE 1 OF 1**

onsemi and onsemi are trademarks of Semiconductor Components Industries, LLC dba **onsemi** or its subsidiaries in the United States and/or other countries. **onsemi** reserves the right to make changes without further notice to any products herein. **onsemi** makes no warranty, representation or guarantee regarding the suitability of its products for any particular purpose, nor does **onsemi** assume any liability arising out of the application or use of any product or circuit, and specifically disclaims any and all liability, including without limitation special, consequential or incidental damages. **onsemi** does not convey any license under its patent rights nor the rights of others.

onsemi, onsemi, and other names, marks, and brands are registered and/or common law trademarks of Semiconductor Components Industries, LLC dba "**onsemi**" or its affiliates and/or subsidiaries in the United States and/or other countries. **onsemi** owns the rights to a number of patents, trademarks, copyrights, trade secrets, and other intellectual property. A listing of **onsemi**'s product/patent coverage may be accessed at www.onsemi.com/site/pdf/Patent−Marking.pdf. **onsemi** reserves the right to make changes at any time to any products or information herein, without notice. The information herein is provided "as−is" and **onsemi** makes no warranty, representation or guarantee regarding the accuracy of the information, product features, availability, functionality, or suitability of its products for any particular purpose, nor does **onsemi** assume any liability arising out of the application or use of any product or circuit, and specifically disclaims any and all liability, including without limitation special, consequential or incidental damages. Buyer is responsible for its products and applications using **onsemi** products, including compliance with all laws, regulations and safety requirements or standards, regardless of any support or applications information provided by **onsemi**. "Typical" parameters which may be provided in **onsemi** data sheets and/or specifications can and do vary in different applications and actual performance may vary over time. All operating parameters, including "Typicals" must be validated for each customer application by customer's technical experts. **onsemi** does not convey any license under any of its intellectual property rights nor the rights of others. **onsemi** products are not designed, intended, or authorized for use as a critical component in life support systems or any FDA Class 3 medical devices or medical devices with a same or similar classification in a foreign jurisdiction or any devices intended for implantation in the human body. Should Buyer purchase or use **onsemi** products for any such unintended or unauthorized application, Buyer shall indemnify and hold **onsemi** and its officers, employees, subsidiaries, affiliates, and distributors harmless against all claims, costs, damages, and expenses, and reasonable attorney fees arising out of, directly or indirectly, any claim of personal injury or death associated with such unintended or unauthorized use, even if such claim alleges that **onsemi** was negligent regarding the design or manufacture of the part. **onsemi** is an Equal Opportunity/Affirmative Action Employer. This literature is subject to all applicable copyright laws and is not for resale in any manner.

ADDITIONAL INFORMATION

TECHNICAL PUBLICATIONS:
Technical Library: www.onsemi.com/design/resources/technical−documentation
onsemi Website: www.onsemi.com

ONLINE SUPPORT: www.onsemi.com/support
For additional information, please contact your local Sales Representative at
www.onsemi.com/support/sales