SMD Full-Band GNSS Ceramic Band-Pass Filter



AFII-LC-0081

Request Samples | Check Inventory

3.2 x 2.5 x 1.75 mm
RoHS Compliant
MSL Level = 1

Description

Designed for next-generation positioning systems, this high-performance GNSS filter offers full-band & multi-constellation support for GPS, GLONASS, BEIDOU, and GALILEO. Its compact 3.2 x 2.5 x 1.75 mm package delivers exceptional RF performance with a 550 MHz bandwidth, low 0.85 dB insertion loss, and high out-of-band rejection exceeding 25 dB. With 50-ohm impedance, 6W power handling, and critical MSL Level 1 compliance for reliable manufacturing, it is the ideal solution for automotive telematics, UAV navigation, asset tracking, and precision agriculture systems requiring robust, accurate signal integrity.

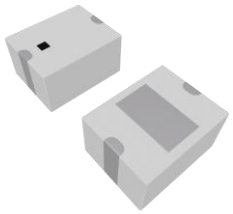

Features

- GPS/GLONASS/BEIDOU/GALILEO Support
- GNSS Full Band Support
- Bandwidth 550 MHz
- Compact in Size 3.2 x 2.5 x 1.75 mm
- Low Insertion Loss: 0.85 dB
- High Out-of-Band Rejection: > 25 dB
- Internal DC Blocking Capacitor at Input & Output
- 50-ohm Single-Ended Input and Output
- Maximum DC Voltage: 10 V
- Maximum Input Power: 6W
- RoHS Compliant | MSL Level 1

Applications

- RF Modules
- RTK Systems
- Automotive Transportation & Telematics
- Asset Tracking / Fleet Management
- UAVs, Robotics & Autonomous Vehicles
- Micro-Mobility Solutions
- Precision Agriculture

Ordering Information

Part Number	Description
AFII-LC-0081	SMD Full-Band GNSS Ceramic Band-Pass Filter on Cut Tape
AFII-LC-0081-T	SMD Full-Band GNSS Ceramic Band-Pass Filter on Tape & Reel

Note: Other options not listed may be available upon request via Abracon online support

ABRACON

12117 Bee Caves Rd, Bldg-3, Suite 200 Bee Cave, TX 78738
Phone: 512-371-6159 | Fax: 512-351-8858
For terms and conditions of sales, please visit: www.abracon.com

REVISED: 10-08-26

ABRACON IS ISO9001-2015 CERTIFIED

SMD Full-Band GNSS Ceramic Band-Pass Filter



AFII-LC-0081

Request Samples | Check Inventory

3.2 x 2.5 x 1.75 mm
RoHS Compliant
MSL Level = 1

GNSS Frequency Bands Covered

GPS	L1 1575.42MHz	L2 1227.6MHz	L5 1176.45MHz	
	■	■	■	
GLONASS	G1 1598.06-1609.31MHz	G2 1242.93-1251.68MHz	G3 1202.025MHz	
	■	■	■	
Galileo	E1 1575.42MHz	E5a 1176.45MHz	E5b 1201.5MHz	E6 1278.75MHz
	■	■	■	■
BeiDou	B1I 1561MHz	B2 1207.14MHz	B3 1268.52MHz	
	■	■	■	
QZSS	L1 1575.42MHz	L2 1227.6MHz	L5 1176.45MHz	L6 1278.75MHz
	■	■	■	■
IRNSS/NAVIC			L5 1176.45MHz	
			■	
SBAS	L1/E1/B1 1575.42MHz		L5/B2a/E5a 1176.45MHz	
	■		■	

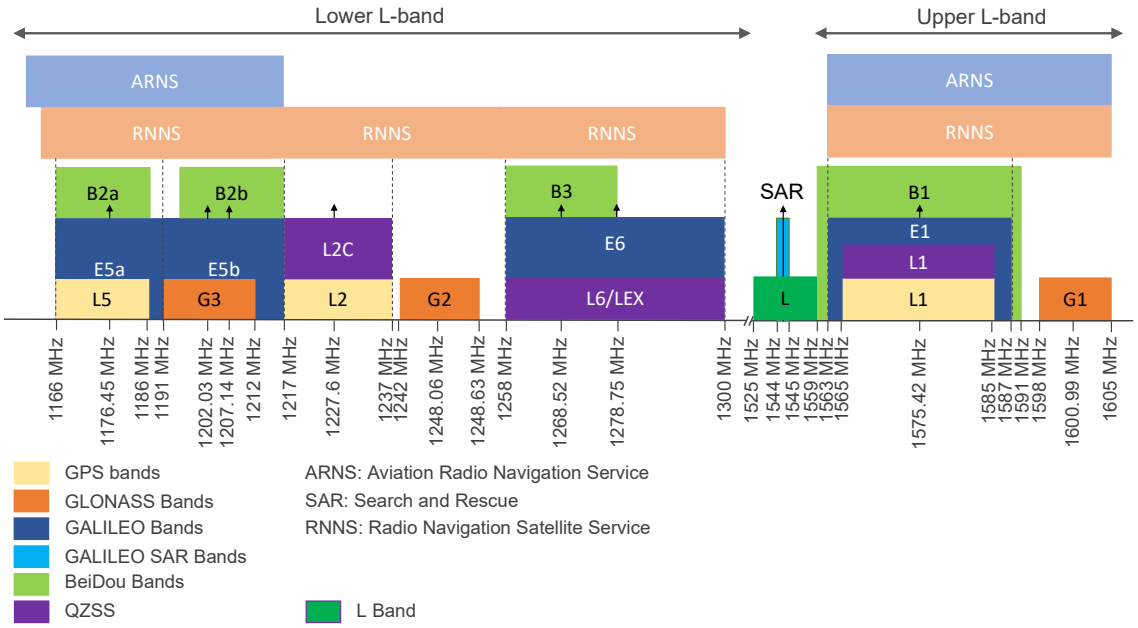

Frequency allocation: GNSS systems, upper L bands and lower L bands

ABRACON

12117 Bee Caves Rd, Bldg-3, Suite 200 Bee Cave, TX 78738
Phone: 512-371-6159 | Fax: 512-351-8858
For terms and conditions of sales, please visit:
www.abracon.com

REVISED: 10-08-26

ABRACON IS ISO9001-2015 CERTIFIED

SMD Full-Band GNSS Ceramic Band-Pass Filter

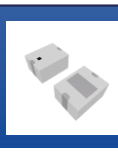

AFII-LC-0081

Request Samples | Check Inventory

3.2 x 2.5 x 1.75 mm
RoHS Compliant
MSL Level = 1

Electrical Specification

Parameters	Minimum	Typical	Maximum	Units	Notes
Center Frequency (fc)	-	1400	-	MHz	-
VSWR	-	1.2	1.5	:1	1125~1675 MHz
Insertion Loss	-	0.85	1.9	dB	1125~1675 MHz
Amplitude Ripple	-	0.2	1.3	dB	1125~1675 MHz
Attenuation (Reference level from 0 dB)	40	-	-	dB	DC - 900 MHz
	25	-	-		900- 1002 MHz
	35	-	-		2000 - 2500 MHz
	27	-	-		2500 - 5950 MHz
Group Delay (+25 °C)	-	1.89	4.36	ns	1125~1675 MHz
Group Delay Ripple (+25 °C)	-	0.58	2.47	ns	1125~1675 MHz
Source Impedance (1) (single ended)	-	50	-	Ω	-
Load Impedance (1) (single ended)	-	50	-	Ω	-
Maximum DC Voltage (2) at Input & Output	-	-	10	V	-
Input Power Level (2)	-	-	6	W	-

Notes: (1) A matching network is unnecessary (refer to the Measurement Circuits section).
(2) The power handling test was conducted at 125°C by applying 3.75 W (125% of the rated maximum power) continuously for 96 hours.

Mechanical Specification

Parameters	Specifications
Filter Dimension	3.2 x 2.5 x 1.75 mm
Mounting Type	Surface Mount
Additional Resources	Download STEP File, Package Drawing, 3D PDF

Environmental Specification

Parameters	Specifications
Operating & Storage Temperature (Unpackaged Component)	-45ºC ~ +85ºC
Storage Temperature in Packaging	-10ºC ~ +40ºC
Packaging Storage Relative Humidity	70% (Max.)
Moisture Sensitivity Level	1

ABRACON

12117 Bee Caves Rd, Bldg-3, Suite 200 Bee Cave, TX 78738
Phone: 512-371-6159 | Fax: 512-351-8858
For terms and conditions of sales, please visit:
www.abracon.com

REVISED: 10-08-26

ABRACON IS ISO9001-2015 CERTIFIED

SMD Full-Band GNSS Ceramic Band-Pass Filter



AFII-LC-0081

Request Samples | Check Inventory

3.2 x 2.5 x 1.75 mm
RoHS Compliant
MSL Level = 1

Product Dimensions

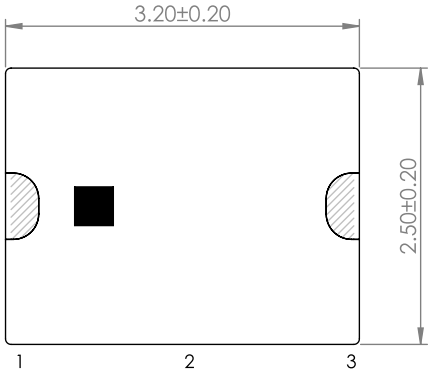

TOP VIEW



FRONT VIEW

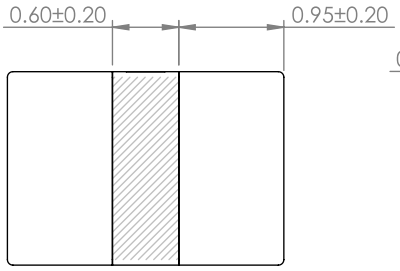

SIDE VIEW

RECOMMENDED LAND PATTERN

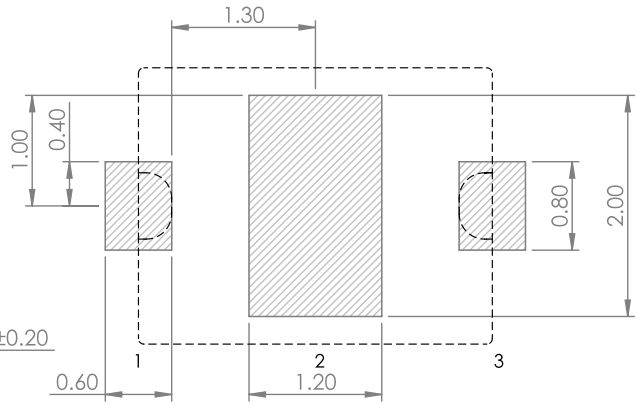

Pin#	FUNCTION
1	IN
2	GND
3	OUT

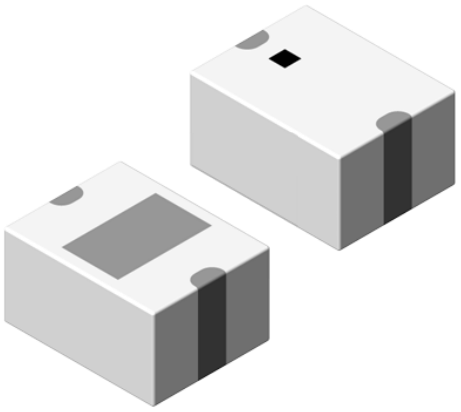

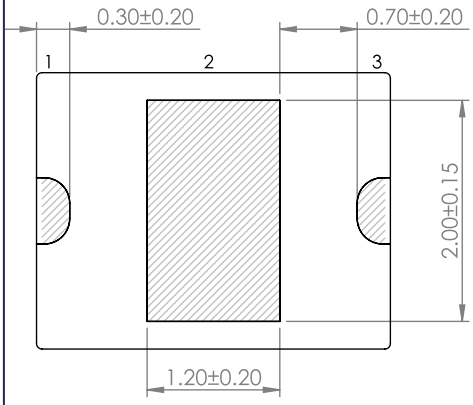

BOTTOM VIEW

Unit: mm

ABRACON

12117 Bee Caves Rd, Bldg-3, Suite 200 Bee Cave, TX 78738
Phone: 512-371-6159 | Fax: 512-351-8858
For terms and conditions of sales, please visit:
www.abracon.com

REVISED: 10-08-26

ABRACON IS ISO9001-2015 CERTIFIED

SMD Full-Band GNSS Ceramic Band-Pass Filter



AFII-LC-0081

Request Samples Check Inventory

3.2 x 2.5 x 1.75 mm
RoHS Compliant
MSL Level = 1

Measurement Circuit

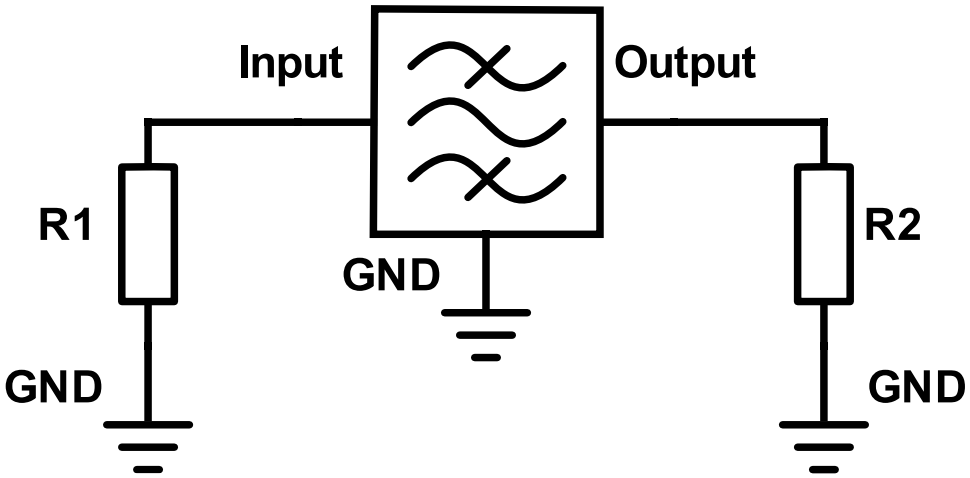

Port	Matching Component
Input (1)	R1: 50Ω
Output (3)	R2: 50Ω

ABRACON

12117 Bee Caves Rd, Bldg-3, Suite 200 Bee Cave, TX 78738
Phone: 512-371-6159 | Fax: 512-351-8858
For terms and conditions of sales, please visit:
www.abracon.com

REVISED: 10-08-26

ABRACON IS ISO9001-2015 CERTIFIED

SMD Full-Band GNSS Ceramic Band-Pass Filter



AFII-LC-0081

Request Samples | Check Inventory

3.2 x 2.5 x 1.75 mm
RoHS Compliant
MSL Level = 1

Frequency Characteristics

S21 narrow band

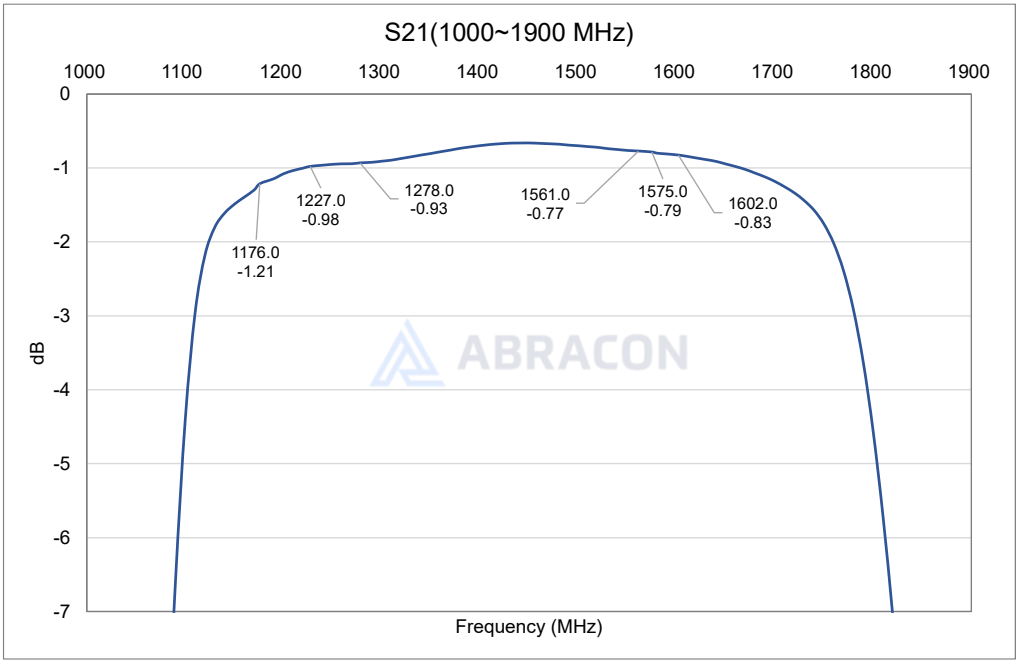

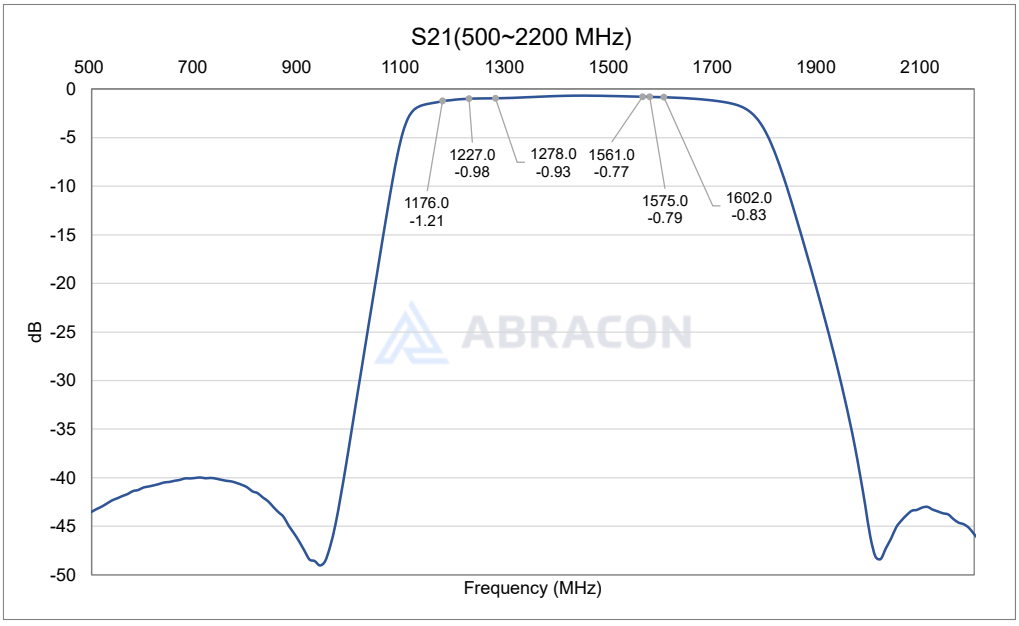

ABRACON

12117 Bee Caves Rd, Bldg-3, Suite 200 Bee Cave, TX 78738
Phone: 512-371-6159 | Fax: 512-351-8858
For terms and conditions of sales, please visit:
www.abracon.com

REVISED: 10-08-26

ABRACON IS ISO9001-2015 CERTIFIED

SMD Full-Band GNSS Ceramic Band-Pass Filter



AFII-LC-0081

Request Samples | Check Inventory

3.2 x 2.5 x 1.75 mm
RoHS Compliant
MSL Level = 1

S21 wide band

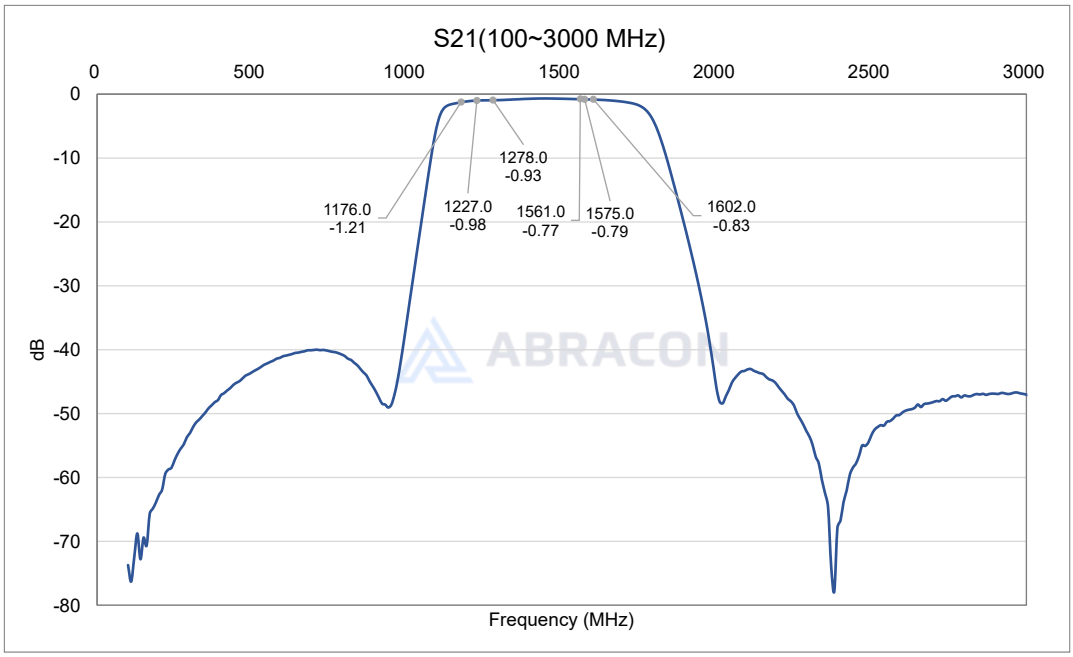

Group Delay

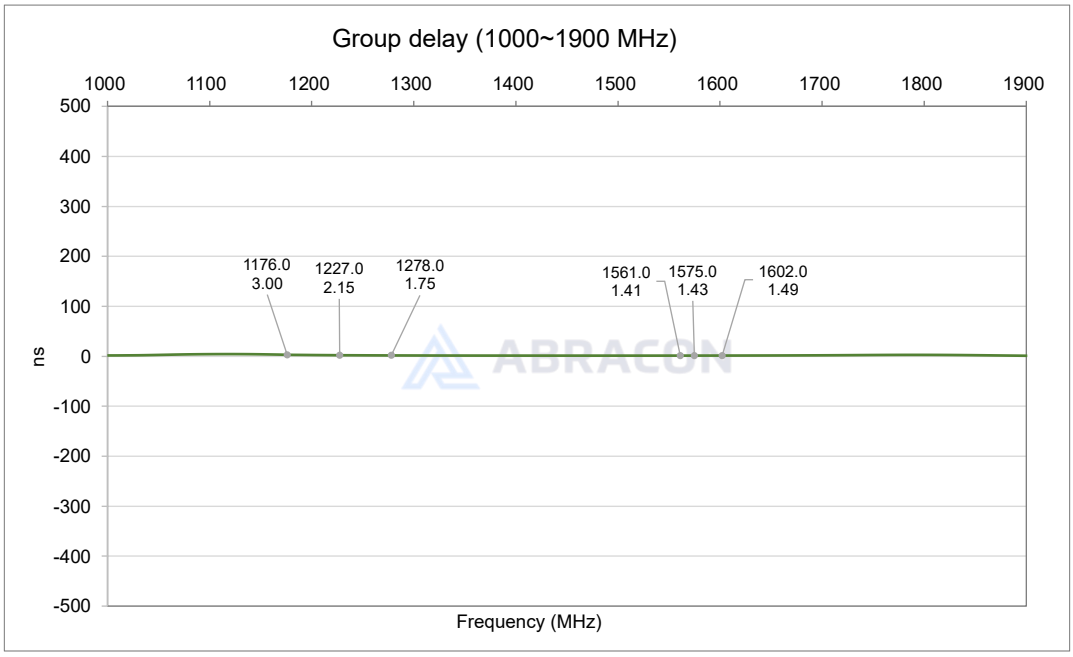

ABRACON

12117 Bee Caves Rd, Bldg-3, Suite 200 Bee Cave, TX 78738
Phone: 512-371-6159 | Fax: 512-351-8858
For terms and conditions of sales, please visit:
www.abracon.com

REVISED: 10-08-26

ABRACON IS ISO9001-2015 CERTIFIED

SMD Full-Band GNSS Ceramic Band-Pass Filter



AFII-LC-0081

Request Samples | Check Inventory

3.2 x 2.5 x 1.75 mm
RoHS Compliant
MSL Level = 1

VSWR (S11 & S22)

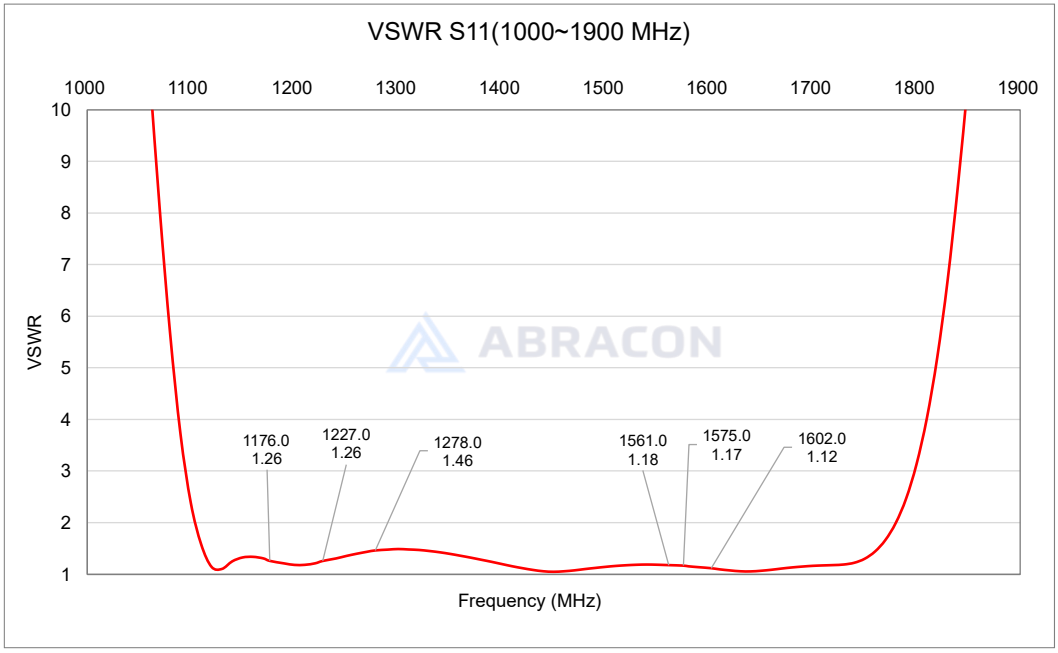

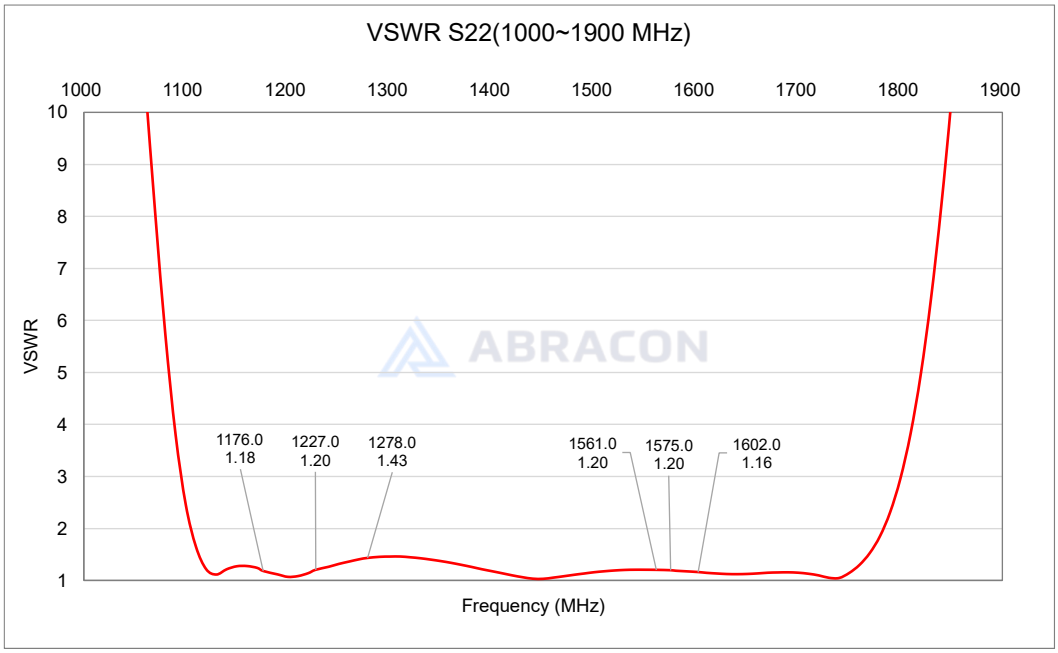

ABRACON

12117 Bee Caves Rd, Bldg-3, Suite 200 Bee Cave, TX 78738
Phone: 512-371-6159 | Fax: 512-351-8858
For terms and conditions of sales, please visit:
www.abracon.com

REVISED: 10-08-26

ABRACON IS ISO9001-2015 CERTIFIED

SMD Full-Band GNSS Ceramic Band-Pass Filter



AFII-LC-0081

Request Samples | Check Inventory

3.2 x 2.5 x 1.75 mm
RoHS Compliant
MSL Level = 1

Smith chart S11 (1120~1680MHz)

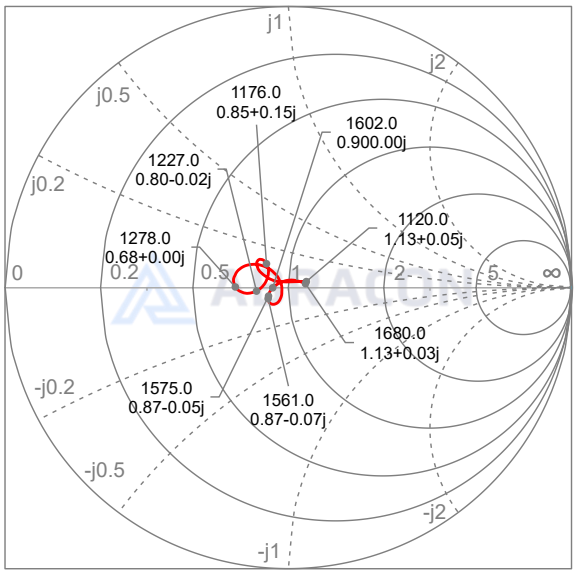

Smith chart S22 (1120~1680MHz)

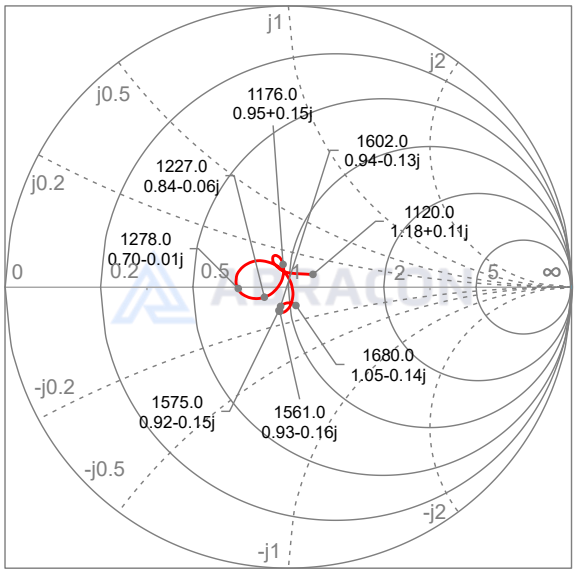

ABRACON

12117 Bee Caves Rd, Bldg-3, Suite 200 Bee Cave, TX 78738
Phone: 512-371-6159 | Fax: 512-351-8858
For terms and conditions of sales, please visit:
www.abracon.com

REVISED: 10-08-26

ABRACON IS ISO9001-2015 CERTIFIED

SMD Full-Band GNSS Ceramic Band-Pass Filter



AFII-LC-0081

Request Samples | Check Inventory

3.2 x 2.5 x 1.75 mm
RoHS Compliant
MSL Level = 1

Reflow Profile [JEDEC J-STD-020]

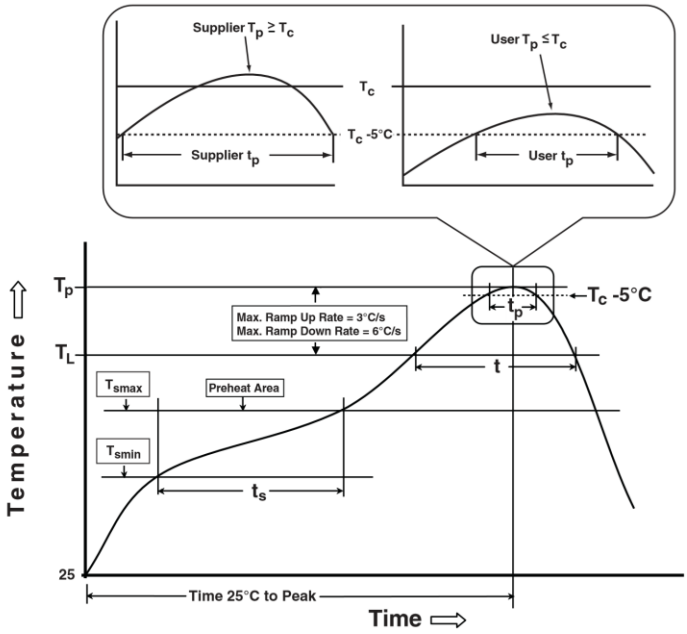

Table 1

SnPb Eutectic Process Classification Temperatures (T_c)		
Package Thickness	**Volume mm³ <350**	**Volume mm³ ≧350**
<2.5mm	235°C	220°C
≧2.5mm	220°C	220°C

Table 2

Pb-Free Process Classification Temperatures (T_c)			
Package Thickness	**Volume mm³ <350**	**Volume mm³ 350-2000**	**Volume mm³ >2000**
<1.6mm	260°C	260°C	260°C
1.6mm - 2.5mm	260°C	250°C	245°C
>2.5mm	250°C	245°C	245°C

Profile Feature	Sn-Pb Eutectic Assembly	Pb-Free Assembly
Preheat / soak		
Temperature minimum (T_{smin})	100°C	150°C
Temperature maximum (T_{smax})	150°C	180°C
Time (T_{smin} to T_{smax}) (t_s)	60 – 120 sec.	60 – 90 sec.
Average ramp-up rate (T_{smax} to T_p)	3°C/sec. max	3°C/sec. max
Liquidous temperature (T_L)	183°C	220°C
Time at Liquidous (T_L)	60 – 150 sec.	50 – 80 sec.
Peak package body temperature (T_p)*	**See Table 1**	**See Table 2**
Time (T_p)** within 5°C of the specified classification temperature (T_c)	20 sec.	20 ~ 40 sec.
Ramp-down rate (T_p to T_{smax})	6°C/sec. max	6°C/sec. max
Time 25°C to peak temperature	6 min. max	8 min. max
Reflow cycles	2 max	2 max

*Tolerance for peak profile temperature (T_p) is defined as a supplier minimum and a user maximum.
**Tolerance for time at peak profile temperature (t_p) is defined as a supplier minimum and a user maximum.

ABRACON

12117 Bee Caves Rd, Bldg-3, Suite 200 Bee Cave, TX 78738
Phone: 512-371-6159 | Fax: 512-351-8858
For terms and conditions of sales, please visit:
www.abracon.com

REVISED: 10-08-26

ABRACON IS ISO9001-2015 CERTIFIED

SMD Full-Band GNSS Ceramic Band-Pass Filter



AFII-LC-0081

Request Samples | Check Inventory

3.2 x 2.5 x 1.75 mm
RoHS Compliant
MSL Level = 1

Packaging

Tape & Reel Dimension

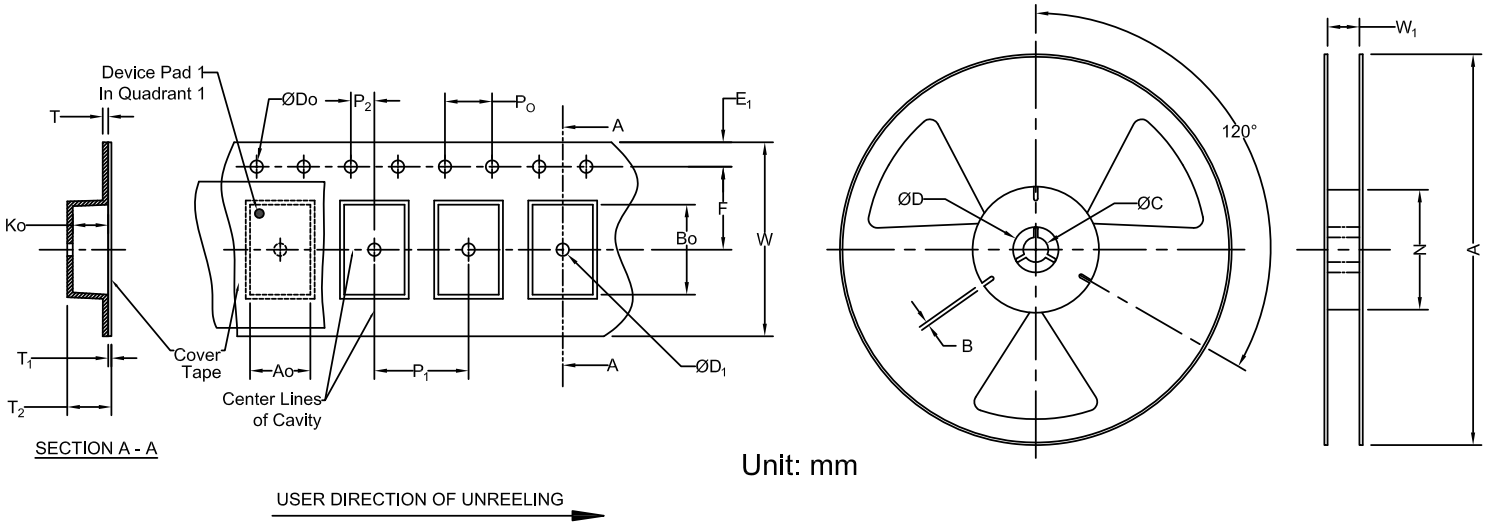

Carrier Tape Specifications (mm)											
Do	E_1	P_0	P_2	T	F	P_1	W	A_0	B_0	K_0	Reel Qty
1.50 ± 0.1	1.75 ± 0.1	4.0 ± 0.1	2.0 ± 0.05	0.27 Max.	3.5 ± 0.05	4.0 ± 0.1	8.0 ± 0.3	2.85 ± 0.1	3.50 ± 0.1	1.95 ± 0.05	2,000

Reel Specifications (mm)				
A	W_1	N	C	B
178.0 ± 1.0	8.4 +1.5/-0.0	58.0 ± 0.2	13.5 ± 0.2	2.45 ± 0.2

ATTENTION: Abracon LLC's products are Commercial-Off-The-Shelf ('COTS'), which are designed, intended, and validated for use in commercial, industrial, and automotive applications. The customer is responsible for testing and verifying the performance of an Abracon solution to meet their system-level requirements.

ABRACON

12117 Bee Caves Rd, Bldg-3, Suite 200 Bee Cave, TX 78738
Phone: 512-371-6159 | Fax: 512-351-8858
For terms and conditions of sales, please visit:
www.abracon.com

REVISED: 10-08-26

ABRACON IS ISO9001-2015 CERTIFIED