FOR-1755 Rev.1.3

未注公差/General tolerances(mm)														
0 ~ 3	>3 ~ 6	>6 ~ 10	>10 ~ 18	>18 ~ 30	>30 ~ 50	>50 ~ 80	>80 ~ 120	>120 ~ 180	>180 ~ 250	>250 ~ 315	>315 ~ 400	>400 ~ 500	>500	0.1/10
±0.12	±0.18	±0.22	±0.26	±0.31	±0.37	±0.57	±0.80	±0.93	±1.05	±1.15	±1.60	±2.20	±2.50	±2°

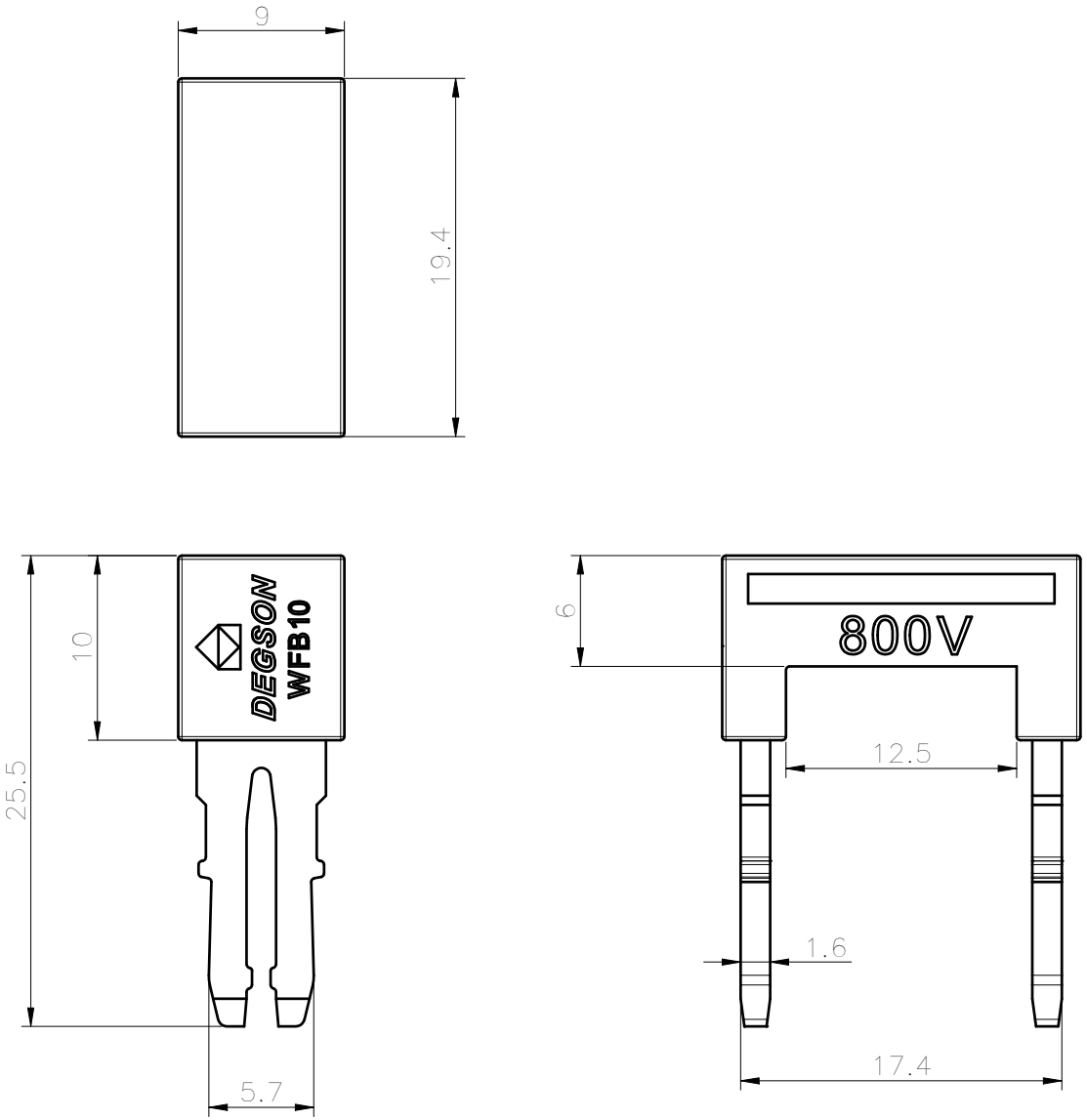

Please refer to the 3D model for those unmarked dimensions

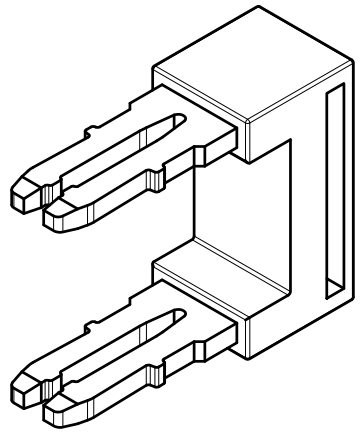

使用温度范围/Operating temperature(°C)	-40~+105
符合 RoHS 环保要求/Conform to RoHS	Yes
阻燃等级/Flame class	UL94V-0

DEGSON

MATERIAL:	SURFACE:	
MAT NO./REV: 92119900580-1 / 00	MAT STATUS: work	
APPD: 李根劳	2021.08.10	NAME
CHKD: 马恩开	2021.08.10	WFB10-01P-11-00L(H)
DRFT: 张君	2021.08.10	
A4	mm (inch)	

DRAWING NO.	TYPE	DRAWING STATUS	SCALE	SHEET
200008193	CUSTOMER DRAWING	work	2:1	1/1

REV	ECN	DESCRIPTION	DRFT	DATE
00		NEW DRAWING	张君	2021.08.10

Transfer or duplication of this document as well as the utilization or communication of its contents are prohibited unless explicit authorization is granted. Violations will be liable for compensation. All rights reserved for patent, utility model or designs registrations. 非给予明确授权，否则禁止转让、复制、利用、交流本文件的内容。侵犯者将负赔偿责任。本公司保留对涉及发明、实用新型和外观专利的所有权利。