No. CD114-STD-E

November 17, 2025

Product Specification

Chip Multilayer Band Pass Filter
WiFi5G

for 4900-5840 MHz

size : 1.6x0.8mm

P/N : LFB185G37CF2D114

All the technical data and Information contained herein are subject to change without prior notice.

Part Number : LFB185G37CF2D114

1. General information

Operating Temperature	-40 ~ +85 °C
Power Capacity	1W 50Ω Load
RoHS compliance	YES (RoHs-Y)
MSL	1

2. Electrical Characteristics (at -40 ~ +85 °C)

Nominal Characteristics Impedance	50 Ω (Nominal)
Nominal Center Frequency	5370.0 MHz
Pass Band Range (BW)	fo ± 470.0 MHz
Insertion Loss in BW	1.5 dB max.at 25° C 1.7 dB max at -40 ~ + 85 °C
Insertion Loss in 5840-5925MHz	1.65 dB max.at 25° C 1.85 dB max at -40 ~ + 85 °C
Attenuation (Absolute value)	14.0 dB min. at 6900.0-7000.0 MHz 15.0 dB min. at 7000.0-7200.0 MHz 15.0 dB min. at 7200.0-7800.0 MHz 33.0 dB min. at100.0-2170.0 MHz 29.0 dB min. at2170.0-2500.0 MHz 32.0 dB min. at 9800.0-12000.0 MHz
V.S.W.R. in BW	2.00 max.
V.S.W.R. in 5840.00~5925.00MHz	2.46 max.

All the technical data and Information contained herein are subject to change without prior notice.

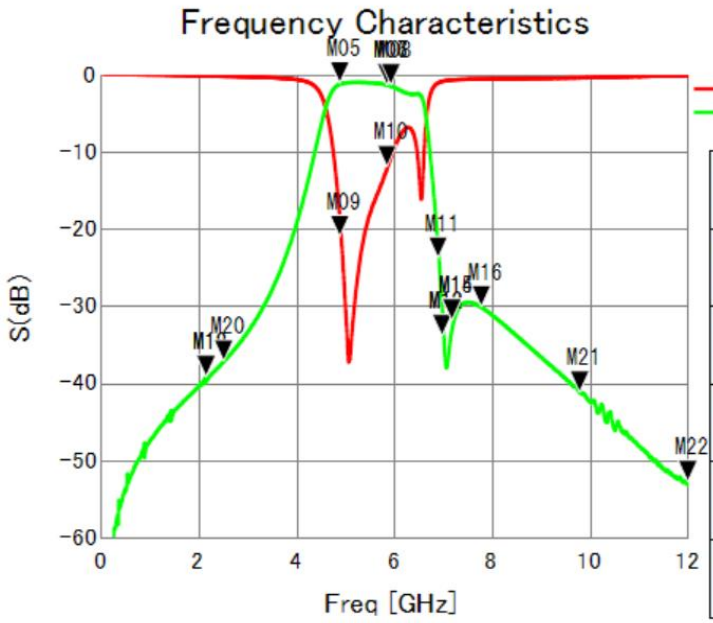

M05 : S(2,1) Freq 4.900G Hz S(dB) −1.103	M06 : S(2,1) Freq 5.840G Hz S(dB) −1.293
M07 : S(2,1) Freq 5.840G Hz S(dB) −1.293	M08 : S(2,1) Freq 5.925G Hz S(dB) −1.441
M09 : S(1,1) Freq 4.900G Hz S(dB) −21.064	M10 : S(1,1) Freq 5.840G Hz S(dB) −12.040
M11 : S(2,1) Freq 6.900G Hz S(dB) −23.816	M12 : S(2,1) Freq 7.000G Hz S(dB) −34.004
M13 : S(2,1) Freq 7.000G Hz S(dB) −34.004	M14 : S(2,1) Freq 7.200G Hz S(dB) −31.929
M15 : S(2,1) Freq 7.200G Hz S(dB) −31.929	M16 : S(2,1) Freq 7.800G Hz S(dB) −30.200
	M18 : S(2,1) Freq 2.170G Hz S(dB) −39.099
M19 : S(2,1) Freq 2.170G Hz S(dB) −39.099	M20 : S(2,1) Freq 2.500G Hz S(dB) −37.083
M21 : S(2,1) Freq 9.800G Hz S(dB) −41.159	M22 : S(2,1) Freq 12.000G Hz S(dB) −52.819

All the technical data and Information contained herein are subject to change without prior notice.

3. Construction, Dimensions & Marking

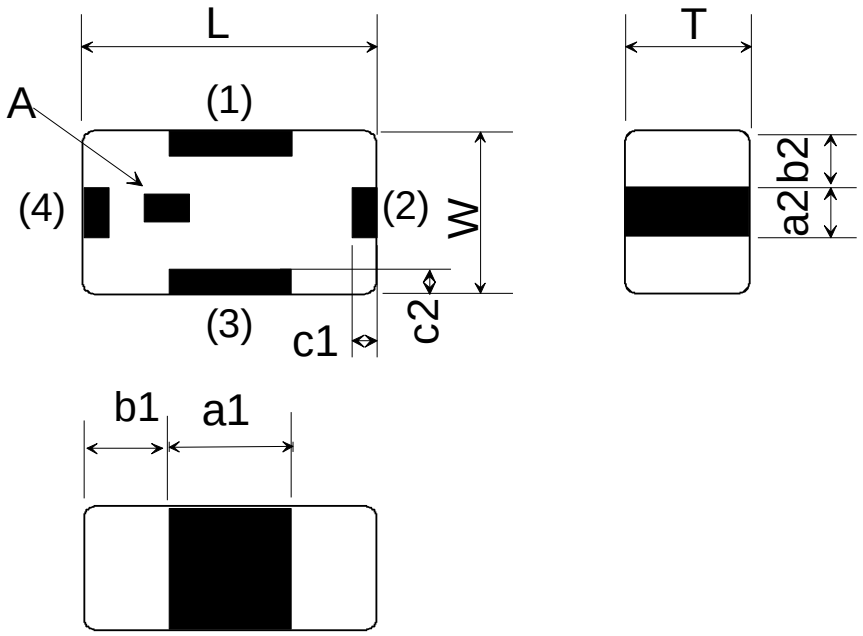

(in mm)

Mark	Meaning
A	Directional Input Mark

Mark	Dimension	Mark	Dimension
L	1.6 ± 0.1	b1	0.45±0.15
W	0.8 ± 0.2	b2	0.25±0.15
T	0.65 max.	c1	0.20±0.15
a1	0.70 ± 0.15	c2	0.20±0.15
a2	0.30 ± 0.15	-	-

TERMINAL CONFIGURATION

Terminal No.	Terminal Name	Terminal No.	Terminal Name
(1)	GND	(3)	GND
(2)	OUT	(4)	IN

All the technical data and Information contained herein are subject to change without prior notice.

4. Land Pattern

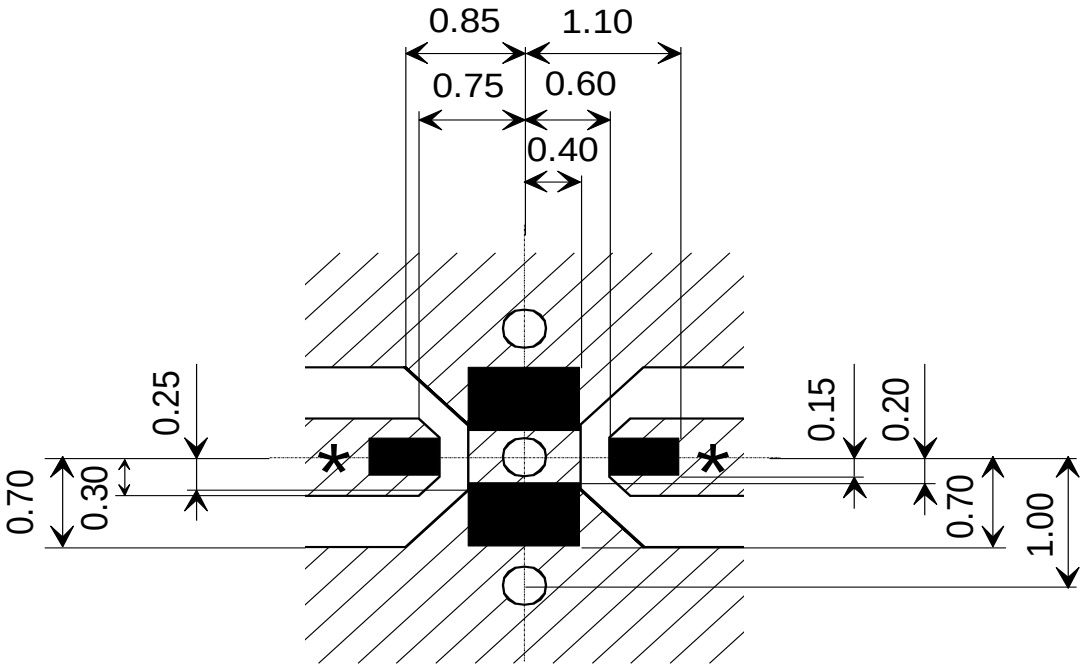

(in mm)

Land

Solder resist

No pattern
Solder resist

Through Hole ϕ 0.30

* Line width to be designed to match 50 ohm characteristic impedance,
Depending on PCB material and thickness.

Strongly recommended to keep the through hole position
in order to reproduce the performance of specification.

All the technical data and Information contained herein are subject to change without prior notice.

5.Tape and Reel Packing

(1) Dimensions of Tape (Paper tape)

∗1 Cumulative tolerance of max. ± 0.3 every 10 pitches

∗2 Reference value

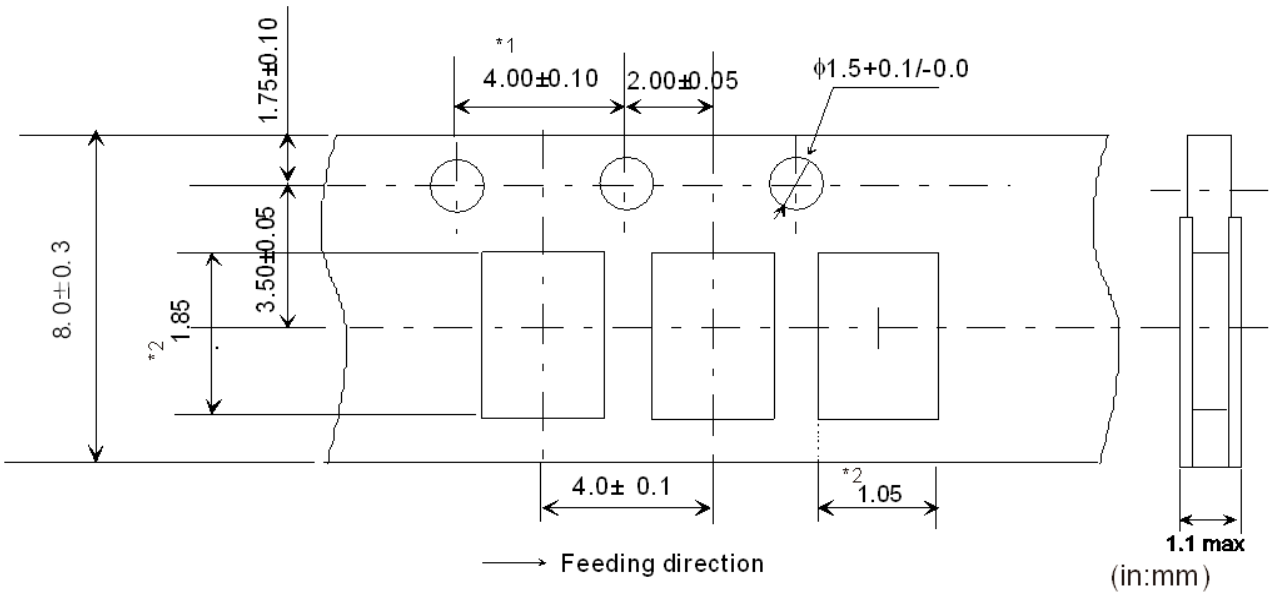

(2) Dimensions of Reel

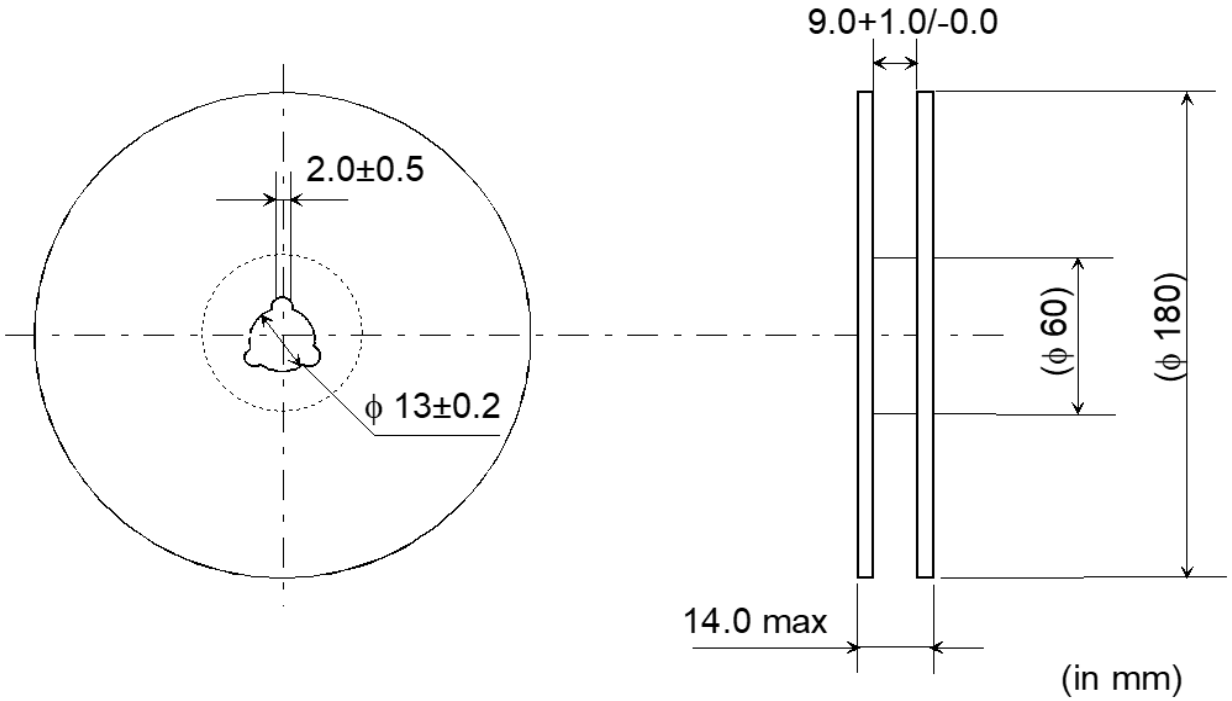

All the technical data and Information contained herein are subject to change without prior notice.

(3) Taping Diagrams

[1] Feeding Hole : As specified in (1)

[2] Hole for chip : As specified in (1)

[3] Top tape : 50 μm in thickness

[4] Base tape : As specified in (1)

[5] Bottom Tape : 50 μm in thickness

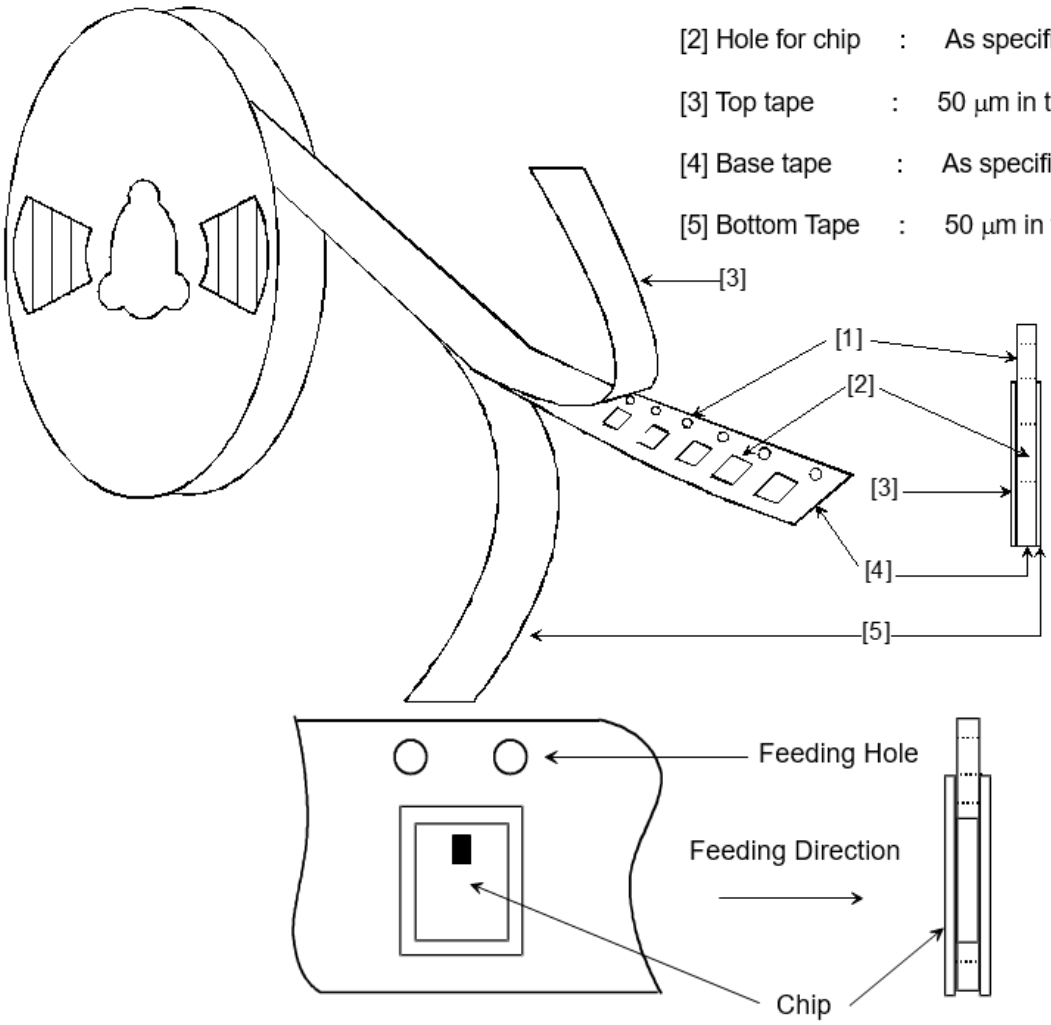

(4) Leader and Tail tape

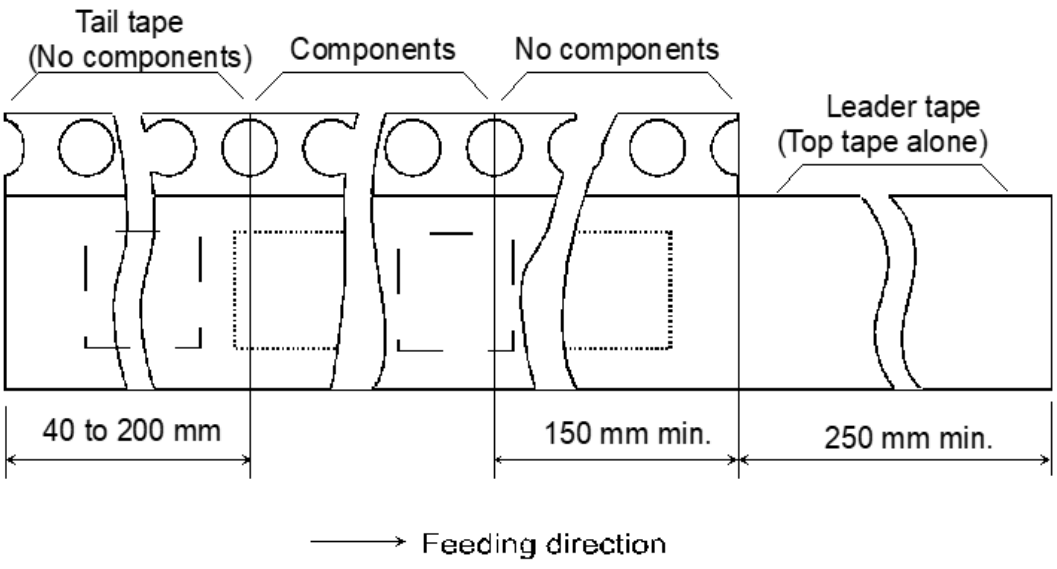

All the technical data and Information contained herein are subject to change without prior notice.

(5) The tape for chips are wound clockwise, the feeding holes to the right side as the tape is pulled toward the user.

(6) The top tape and bottom tape shall not protrude the edges of the tape, and shall not cover sprocket holes.

(7) The top tape and base tape are not adhered at no components area for 250 mm min.

(8) Tear off strength against pulling of top tape and bottom tape : 5N min.

(9) Packaging unit : 4000 pcs. / reel

(10) Material : Base tape .....Paper
Reel .....Plastic

(11) Peeling of force : in the direction of peeling as shown below.
Peeling speed : 300mm/min ± 10mm/min

Tape width	Peeling of force (max)
8mm	1.0N

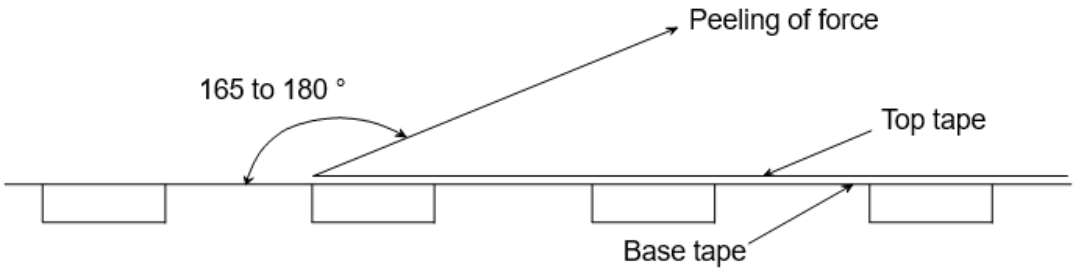

All the technical data and Information contained herein are subject to change without prior notice.

⚠ CAUTION

PLEASE READ THIS NOTICE BEFORE USING OUR PRODUCTS.

Please make sure that your product has been evaluated and confirmed from the aspect of the fitness for the specifications of our product when our product is mounted to your product.
All the items and parameters in this product specification/datasheet/catalog have been prescribed on the premise that our product is used for the purpose, under the condition and in the environment specified in this specification. You are requested not to use our product deviating from the condition and the environment specified in this specification.
Please note that the only warranty that we provide regarding the products is its conformance to the specifications provided herein. Accordingly, we shall not be responsible for any defects in products or equipment incorporating such products, which are caused under the conditions other than those specified in this specification.

WE HEREBY DISCLAIMS ALL OTHER WARRANTIES REGARDING THE PRODUCTS, EXPRESS OR IMPLIED, INCLUDING WITHOUT LIMITATION ANY WARRANTY OF FITNESS FOR A PARTICULAR PURPOSE, THAT THEY ARE DEFECT-FREE, OR AGAINST INFRINGEMENT OF INTELLECTUAL PROPERTY RIGHTS.

The product shall not be used in any application listed below which requires especially high reliability for the prevention of such defect as may directly cause damage to the third party's life, body or property. You acknowledge and agree that, if you use our products in such applications, we will not be responsible for any failure to meet such requirements.
Furthermore, YOU AGREE TO INDEMNIFY AND DEFEND US AND OUR AFFILIATES AGAINST ALL CLAIMS, DAMAGES, COSTS, AND EXPENSES THAT MAY BE INCURRED, INCLUDING WITHOUT LIMITATION, ATTORNEY FEES AND COSTS, DUE TO THE USE OF OUR PRODUCTS IN SUCH APPLICATIONS.

- Aircraft equipment.
- Aerospace equipment
- Undersea equipment.
- Power plant control equipment
- Medical equipment.
- Transportation equipment (vehicles, trains, ships, elevator, etc.).
- Traffic signal equipment.
- Disaster prevention / crime prevention equipment.
- Burning / explosion control equipment
- Application of similar complexity and/ or reliability requirements to the applications listed in the above.

We expressly prohibit you from analyzing, breaking, Reverse-Engineering, remodeling altering, and reproducing our product. Our product cannot be used for the product which is prohibited from being manufactured, used, and sold by the regulations and laws in the world.

We do not warrant or represent that any license, either express or implied, is granted under any our patent right, copyright, mask work right, or our other intellectual property right relating to any combination, machine, or process in which our products or services are used. Information provided by us regarding third-party products or services does not constitute a license from us to use such products or services or a warranty or endorsement thereof. Use of such information may require a license from a third party under the patents or other intellectual property of the third party, or a license from us under our patents or other intellectual property.

Please do not use our products, our technical information and other data provided by us for the purpose of developing of mass-destruction weapons and the purpose of military use.
Moreover, you must comply with "foreign exchange and foreign trade law", the "U.S. export administration regulations", etc.

Please note that we may discontinue the manufacture of our products, due to reasons such as end of supply of materials and/or components from our suppliers.

Customer acknowledges that Murata will, if requested by you, conduct a failure analysis for defect or alleged defect of Products only at the level required for consumer grade Products, and thus such analysis may not always be available or be in accordance with your request (for example, in cases where the defect was caused by components in Products supplied to Murata from a third party).

By signing on specification sheet or approval sheet, you acknowledge that you are the legal representative for your company and that you understand and accept the validity of the contents herein.
When you are not able to return the signed version of specification sheet or approval sheet within 90 days from receiving date of specification sheet or approval sheet, it shall be deemed to be your consent on the content of specification sheet or approval sheet.

Customer acknowledges that engineering samples may deviate from specifications and may contain defects due to their development status.
We reject any liability or product warranty for engineering samples.
In particular we disclaim liability for damages caused by
・the use of the engineering sample other than for evaluation purposes, particularly the installation or integration in the product to be sold by you,
・deviation or lapse in function of engineering sample,
・improper use of engineering samples.
We disclaims any liability for consequential and incidental damages.

If you can't agree the above contents, you should inquire our sales.

Change History

Revision No.	Date	Comment
-	2025/11/17	Initial

All the technical data and Information contained herein are subject to change without prior notice.