# **SERIES:** VFM-30-W | **DESCRIPTION:** DC POWER LINE FILTER

### FEATURES

- compact
- high efficiency 98%
- meet IEC/EN61000-4 standard
- CISPR22/EN55022 compliant
- DIP, Chassis and DIN Rail mounting version
- input voltage protection



RoHS

## SPECIFICATIONS

| parameter | conditions/description | min | typ | max | units |
|---|---|---|---|---|---|
| input voltage | | 18 | 48 | 75 | Vdc |
| output power | | | | 30 | W |
| no load input current | at 48 Vdc | | | 10 | mA |
| efficiency | at 48 Vdc, full load | | 98 | | % |
| isolation voltage | +Vin to GND, -Vin to GND, at 1 minute and leakage current 5 mA max | | | 500 | Vac |
| conducted emissions | CISPR22/EN55022, 150 kHz ~ 30 MHz class B | | | | |
| radiated emissions | CISPR22/EN55022, 30 MHz ~ 1 GHz class B | | | | |
| ESD | IEC/EN61000-4-2, air ±8 kV, contact ± 6kV, class B | | | | |
| radiated immunity | IEC/EN61000-4-3, 10 V/m, class A | | | | |
| EFT/burst | IEC/EN61000-4-4, ±4 kV(5 kHz, 100 kHz), class B | | | | |
| surge | IEC/EN61000-4-5, ±2 kV (1.2μs/50μs 2Ω)/±4 kV (1.2 μs/50 μs 12 Ω), class B | | | | |
| conducted immunity | IEC/EN61000-4-6, 10 Vr.m.s, class A | | | | |
| MTBF | as per MIL-HDBK-217F, 40°C | | 1,000,000 | | hours |
| RoHS | yes | | | | |
| operating temperature | | -40 | | 85 | °C |
| storage temperature | | -55 | | 125 | °C |
| storage humidity | non-condensing | 5 | | 95 | % |

Notes: 1. All specifications are measured at Ta=25°C, humidity < 75%, nominal input voltage, and rated load, unless otherwise specified.

## PART NUMBER KEY

**VFM-30-W - X**

Base Number

Mounting Style:
D = board mount
T = chassis mount
DIN = DIN-rail mount



Please read our datasheet & drawing disclaimer here.

## SOLDERABILITY[2]

| parameter | conditions/description | min | typ | max | units |
|---|---|---|---|---|---|
| hand soldering | for 3~5 seconds | 350 | 360 | 370 | °C |
| wave soldering | see wave soldering profile | | | 260 | °C |

Note: 2. For board mount models only.

### *WAVE SOLDERING PROFILE*

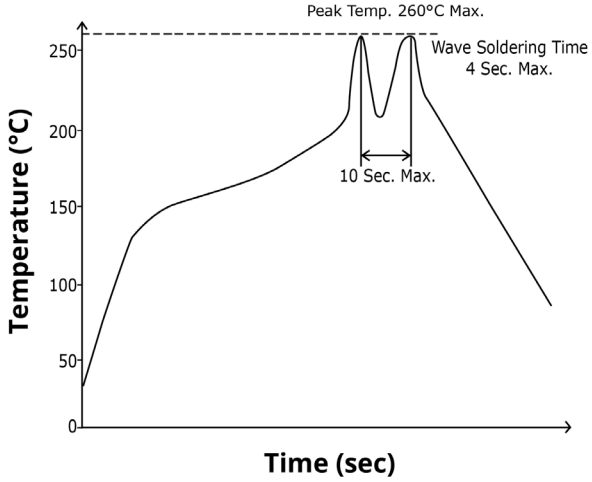


## MECHANICAL

| parameter | conditions/description | min | typ | max | units |
|---|---|---|---|---|---|
| dimensions | board mount: 53.80 x 28.80 x 19.00 [2.118 x 1.134 x 0.748 inch] | | | | mm |
| | chassis mount: 76.00 x 31.50 x 27.80 [2.992 x 1.240 x 1.094 inch] | | | | mm |
| | DIN-Rail mount: 76.00 x 31.50 x 32.40 [2.992 x 1.240 x 1.276 inch] | | | | mm |
| case material | black flame-retardant heat-proof epoxy resin (UL94V-0) | | | | |
| weight | board mount | | 50 | | g |
| | chassis mount | | 70 | | g |
| | DIN-rail mount | | 90 | | g |

## MECHANICAL DRAWING (BOARD MOUNT)

units: mm [inch]
tolerance: ±0.50[±0.020]
pin diameter tolerance: ±0.10[±0.004]

| PIN CONNECTIONS | |
|---|---|
| PIN | Function |
| 1 | GND |
| 2 | -Vin |
| 3 | +Vin |
| 4 | +Vout |
| 5 | -Vout |

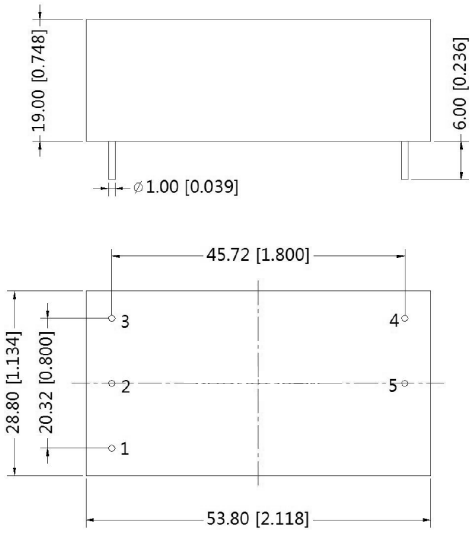


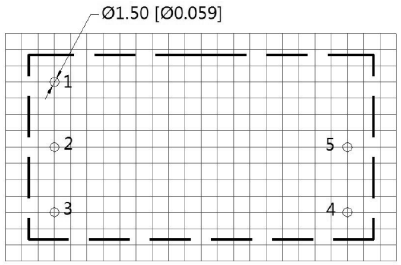


Note : Grid 2.54*2.54mm
Recommended PCB Layout
Top View

## MECHANICAL DRAWING (CHASSIS MOUNT)

units: mm [inch]
tolerance: ±0.50[±0.020]

wire range: 24~12 AWG
tightening torgue: 0.4 N*m max

| PIN CONNECTIONS | |
|---|---|
| PIN | Function |
| 1 | GND |
| 2 | -Vin |
| 3 | +Vin |
| 4 | +Vout |
| 5 | -Vout |

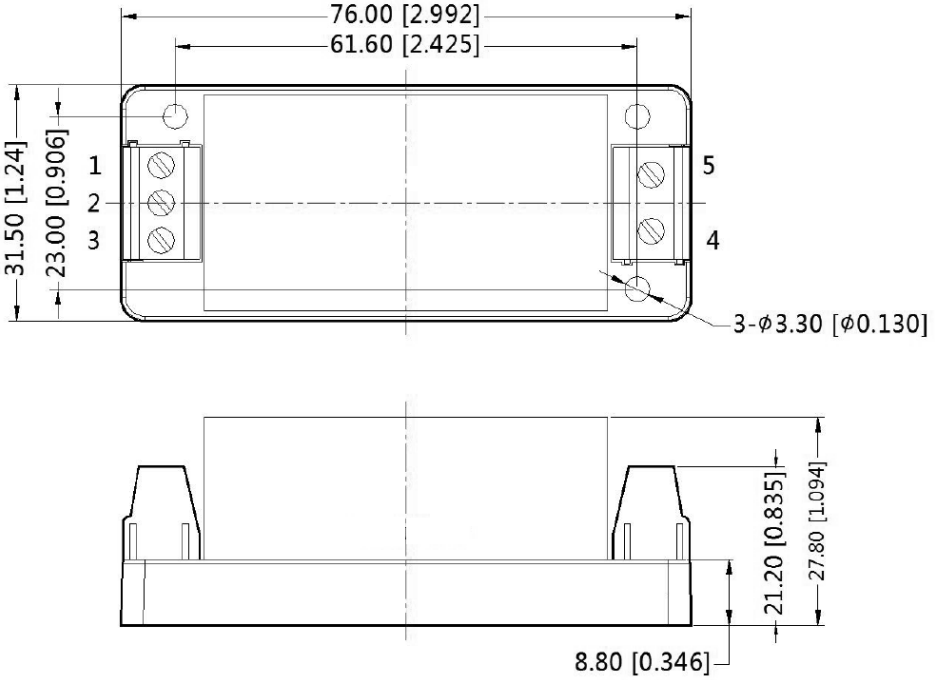


## MECHANICAL DRAWING (DIN-RAIL MOUNT)

units: mm [inch]
tolerance: ±0.50[±0.020]

installed on DIN rail TS35
wire range: 24~12 AWG
tightening torgue: 0.4 N*m max

| PIN CONNECTIONS | |
|---|---|
| PIN | Function |
| 1 | GND |
| 2 | -Vin |
| 3 | +Vin |
| 4 | +Vout |
| 5 | -Vout |

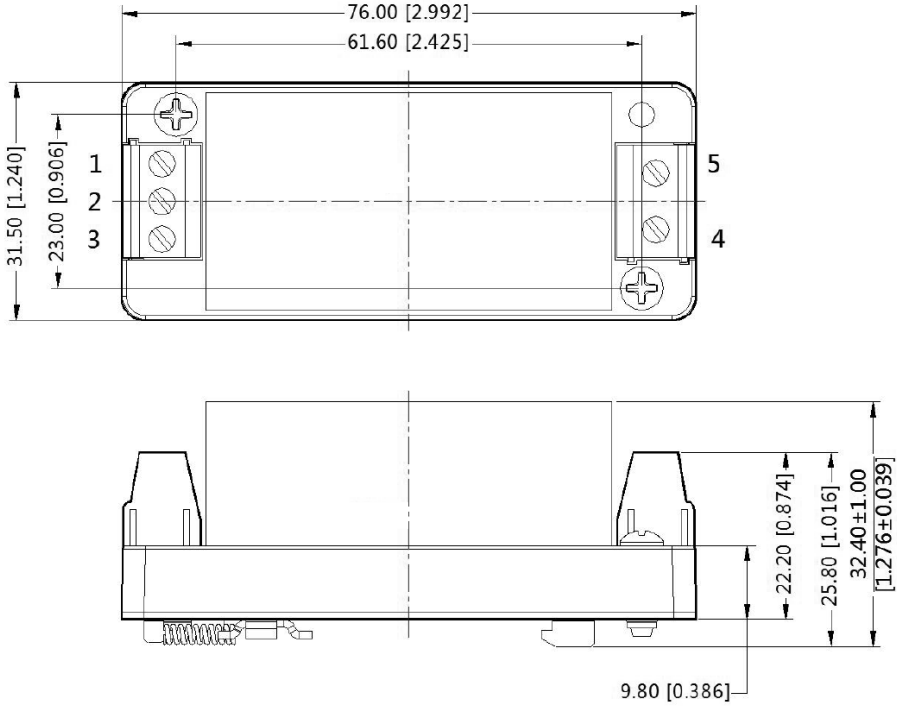

## APPLICATION CIRCUIT

Figure 1
Application Circuit

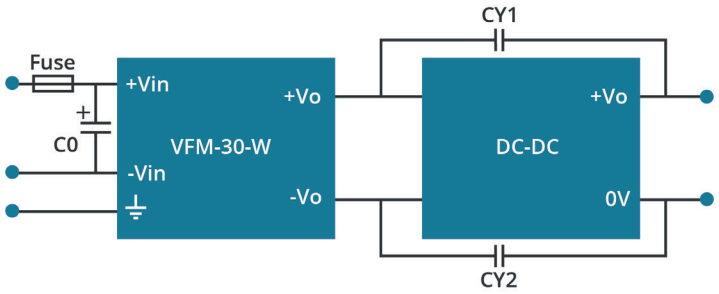


| Recommended External Circuit Components | |
|---|---|
| FUSE | choose according to power module datasheet |
| C0 | 400 µF / 200 V, electrolytic |
| CY1, CY2 | 1 nF / 2 kV |

Figure 2
Non-supported Application for Module

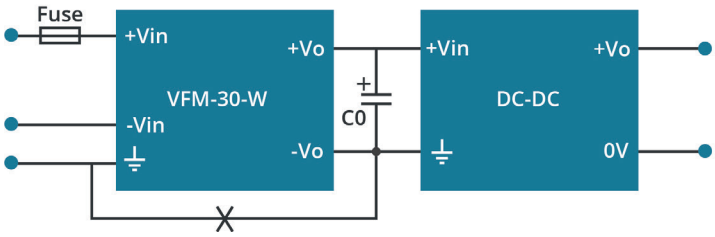


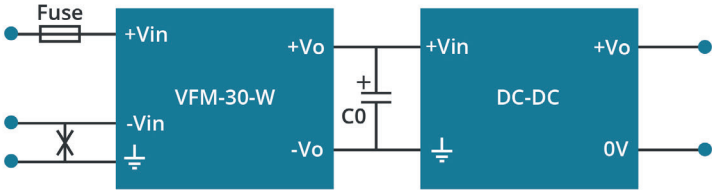

## REVISION HISTORY

| rev. | description | date |
|---|---|---|
| 1.0 | initial release | 12/17/2018 |
| 1.01 | packaging removed | 05/14/2021 |
| 1.02 | circuit figures updated | 01/14/2022 |

The revision history provided is for informational purposes only and is believed to be accurate.

CUI INC
a bel group

**Headquarters**
20050 SW 112th Ave.
Tualatin, OR 97062
**800.275.4899**

Fax 503.612.2383
**cui**.com
techsupport@cui.com

CUI offers a two (2) year limited warranty. Complete warranty information is listed on our website.

CUI reserves the right to make changes to the product at any time without notice. Information provided by CUI is believed to be accurate and reliable. However, no responsibility is assumed by CUI for its use, nor for any infringements of patents or other rights of third parties which may result from its use.

CUI products are not authorized or warranted for use as critical components in equipment that requires an extremely high level of reliability. A critical component is any component of a life support device or system whose failure to perform can be reasonably expected to cause the failure of the life support device or system, or to affect its safety or effectiveness.