DS73US-120T/G



- Hybrid Technology (Multi-MOV+GSG)
- UL1449 Type 1 LISTED
- 75kA Surge Current Rating per module
- Visual fault indicator and remote contacts
- 10-Year warranty

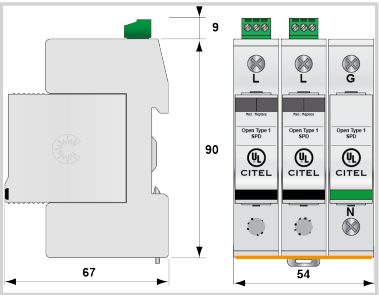

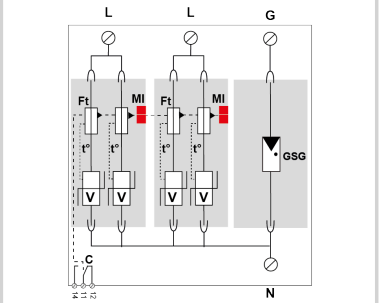

V: High-energy varistor
Ft: Thermal fuse
C: Remote signal contact
t°: Thermal disconnection system
MI: Disconnection indicator

Electrical Characteristics		
POWER SPD TYPE		UL1449 TYPE 1 LISTED
VOLTS	(V)	240/120
AC/DC/DC PV/RF		AC
PHASE	(PH)	1S
AMPS	(A)	N/A
AMBIENT MIN	(C)	-40
AMBIENT MAX	(C)	+85
MODES		L-L, L-N, L-G, N-G
VPR	(V)	1200/800/1500/1200
MCOV	(V)	320/320/255
IN *15 impulses 8/20µs*	(kA)	20
SCCR	(kA)	200
IMAX *8/20µs*	(kA)	75
RELATIVE HUMIDITY	(%)	95%
Mechanical Characteristics		
TECHNOLOGY		Multi-MOV+GSG
NETWORK CONFIGURATION		1PH, 3W+G, Split Phase
CONNECTION METHOD		SPD-Screw Terminal (8-12AWG), Terminal blocks 6AWG
MOUNTING		Din Rail
MATERIAL		Thermoplastic UL94-V0
NEMA RATING (IP RATING)		NEMA 2 (IP20)
FAIL-SAFE BEHAVIOR		Disconnection via fuse-link
REAL-TIME DIAGNOSTICS		Visual indicator and remote contacts
DIMENSIONS		See diagram
Standards		
Environmental standards		EU RoHS
UL STANDARD		UL1449 5th Edition
UL CATEGORY		VZCA, VZCA7
UL FILE NUMBER		E326289
STANDARDS		IEC61643-11/EN61643-11, NOM-003-SCFI-2014, NOM-001-SCFI-1993
Part number		
32273355		