DIP Switch KHS Series

DIP Slide | SMD | 1,2,4,6,8,10 Poles

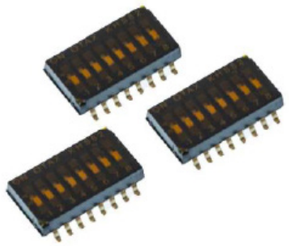

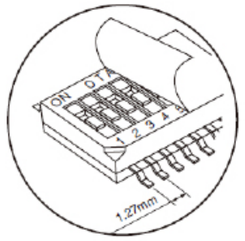

■ Structure

Outline of the Series

This is a half-pitch surface-mount DIP slide switch developed by OTAX ahead of the rest of the world.
It is available with either gull-wing or J-lead terminals.

Features of the Series

1. Achieves ultra-miniaturization with a half-pitch (P = 1.27 mm) by significantly reducing the size of the internal mechanism.
2. Enables high-density mounting (41.9% of our conventional product footprint for 8 poles).
3. Gold-plated contacts are provided as standard.
4. Two terminal shapes are available: gull-wing type and J-lead type.
5. Supports automated mounting by SMT mounters, reflow soldering, and cleaning (via tape seal). Tape reel and magazine packaging are also available for automated mounting.

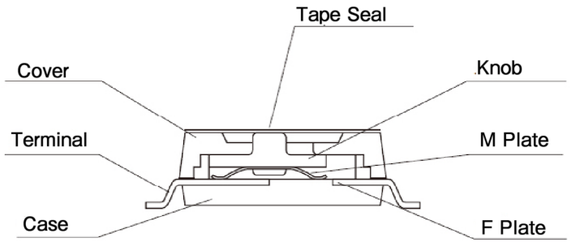

Gull-wing

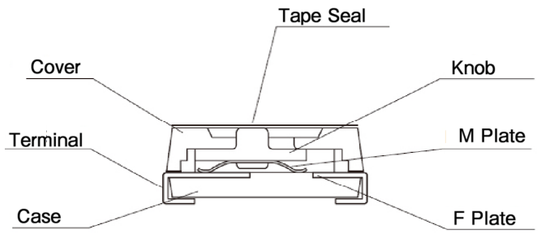

J-lead

Common Specifications

Ratings	DC24V 25mA
Contact Resistance	100 mΩ Max. (initial value))
Withstanding Voltage	AC300V 1 Minute
Insulating Resistance	Min. 100MΩ
Electrical Life	1,000 times
Operating Temperature Range	-30℃～+85℃
Storage Temperature Range	-40℃～+85℃
Operating Force	4.9N Max.
Number of Re-flow	2 times Max.

Specifications of Materials

Part Name	Materials	Finish
Knob	LCP	White
Cover	PPS	Black
Case	PPS	Black
Terminals (except contact-parts)	Copper Alloy	Gold Flash
Movable Plate (Movable Contact)	Copper Alloy	Gold Plating
Fixed Plate (Fixed Contact)	Copper Alloy	Gold Plating

* For products other than those listed above or for custom items, please contact us.

OTAX Co., Ltd.
1215, Nippacho, Kohoku-ward,
Yokohama, Kanagawa, 223-8558 Japan
TEL: +81-45-543-5621 (Representative)
Mail: sales@otax.co.jp
HP: https://www.otax-en.com/

DIP Switch KHS Series

DIP Slide | SMD | 1,2,4,6,8,10 Poles

Product Designations

Series Name		Shape of Operational-part	Poles		Type of Terminals	Package and contained number	Tape-seal
K	H	S	8	2		E	

Shape of Operationa-part	Symbol
Slide	S

Poles	Symbol
1	12
2	22
4	42
6	62
8	82
10	102

Type of Terminals	Symbol
Gull-wing	-
J-lead	L

※ For J-lead, 1 Pole is not available.

Package	Symbol
Magazine (Gull-wing)	C
Magazine (J-lead)	L
Tape-reel (2,000 pcs/reel)	E
Tape-reel (100pcs/reel)	E100
Tape-reel (500pcs/reel)	EF

tape-seal	Symbol
With	-
Without	-2

Standard Dimensions (Gull-wing)

Gull-wing KHS □□□□

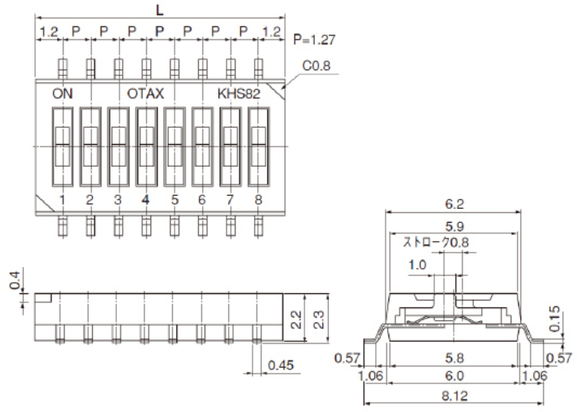

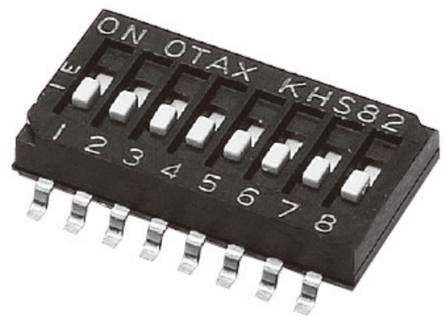

Mounting Land Dimensions

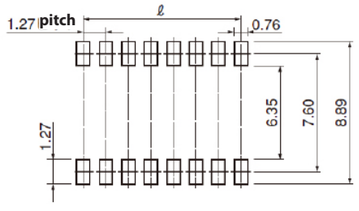

Product Names and Dimensions

Product Name	Poles	L (mm)	ℓ (mm)
KHS12 □□	1	2.40	0.00
KHS22 □□	2	3.67	1.27
KHS42 □□	4	6.21	3.81
KHS62 □□	6	8.75	6.35
KHS82 □□	8	11.29	8.89
KHS102 □□	10	13.83	11.43

* For products other than those listed above or for custom items, please contact us.

OTAX Co., Ltd.
1215, Nippacho, Kohoku-ward,
Yokohama, Kanagawa, 223-8558 Japan
TEL: +81-45-543-5621 (Representative)
Mail: sales@otax.co.jp
HP: https://www.otax-en.com/

DIP Switch | KHS Series | DIP Slide | SMD | 1,2,4,6,8,10 Poles

Standard Dimensions（J-lead）

J-lead KHS □□ L □□

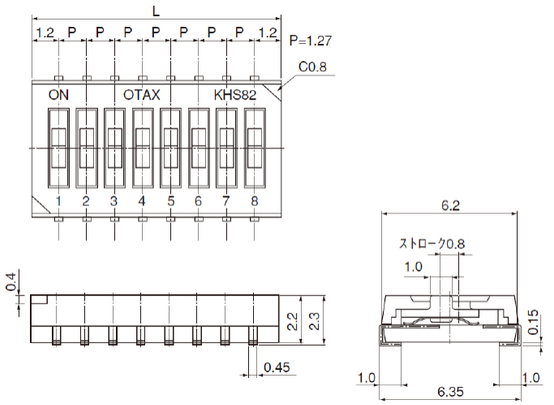

Mounting Land Dimensions

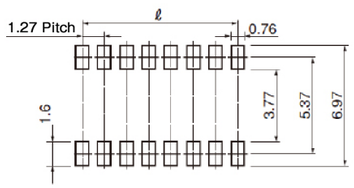

Product Names and Dimensions

Product Name	Poles	L (mm)	ℓ (mm)
KHS22L □□	2	3.67	1.27
KHS42L □□	4	6.21	3.81
KHS62L □□	6	8.75	6.35
KHS82L □□	8	11.29	8.89
KHS102L □□	10	13.83	11.43

Soldering Conditions

＊ Regarding the Soldering Conditions, please refer to the separate data sheet.（Hand Soldering Condition is B.）

Cautions on Handling Products

1. Cleaning agents such as alcohol-based, petroleum-based, ketone-based, and chlorine-based solvents can be used.
2. The conditions for reflow soldering may vary depending on the dimensions of the printed circuit board and the assembly density in the actual production process. Please refer to the temperature profile in the separate datasheet in advance, and confirm the surface temperature and soldering condition of the mounted product before use.

* For products other than those listed above or for custom items, please contact us.

OTAX Co., Ltd.
1215, Nippacho, Kohoku-ward,
Yokohama, Kanagawa, 223-8558 Japan
otax
TEL: +81-45-543-5621（Representative）
Mail: sales@otax.co.jp
HP: https://www.otax-en.com/

DIP Switch | KHS Series | DIP Slide | SMD | 1,2,4,6,8,10 Poles

Details of Quantity in each Package

Poles	Q'ty per 1 Magazine (pcs)	Q'ty of Magazine per 1 Box (sticks)	Total Q'ty per one box
1	195	100	19,500
2	125	100	12,500
4	70	100	7,000
6	50	100	5,000
8	40	100	4,000
10	30	100	3,000

Specifications of Tape-reel Packages

Gull-wing Terminals

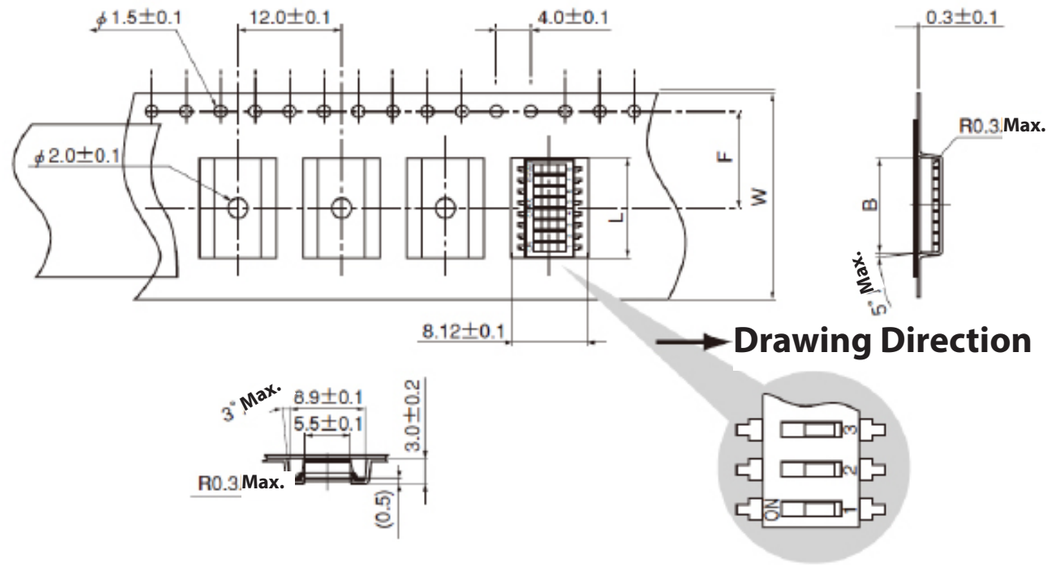

Poles	W±0.3	F±0.1	B±0.1	L±0.5
1	16.0	7.5	3.18	2.40
2			4.45	3.67
4			7.00	6.21
6			9.55	8.75
8	24.0	11.5	12.10	11.29
10			14.60	13.83

Applied Standards

JIS C 0806
TB0804～TB2420
EIA-481-A
16, 24mm Embossed Tape

* For products other than those listed above or for custom items, please contact us.

OTAX Co., Ltd.
1215, Nippacho, Kohoku-ward,
Yokohama, Kanagawa, 223-8558 Japan
otax
TEL: +81-45-543-5621（Representative）
Mail: sales@otax.co.jp
HP: https://www.otax-en.com/

J-lead Terminals

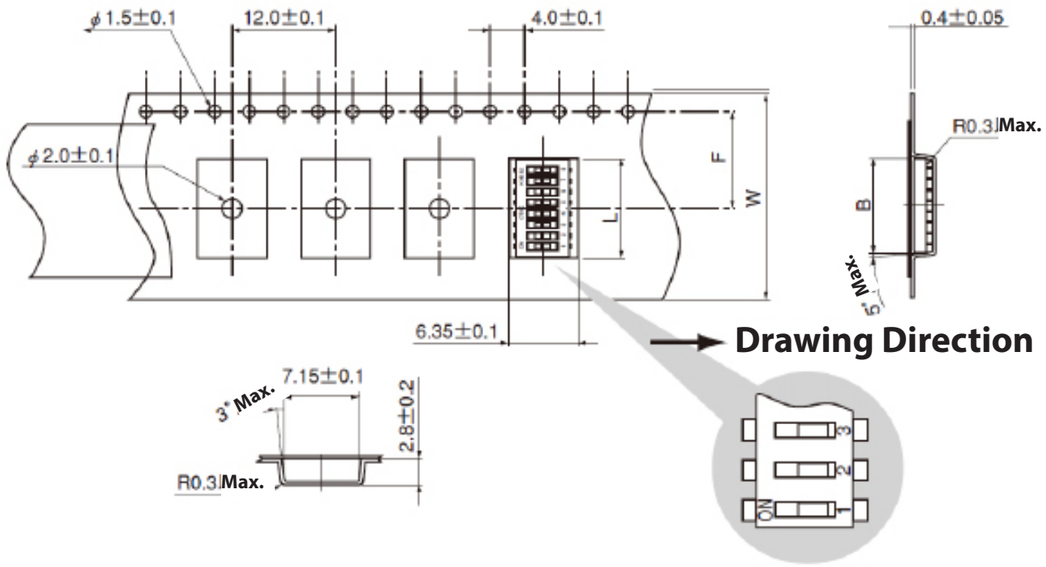

Poles	W±0.3	F±0.1	B±0.1	L±0.5
2	16.0	7.5	4.45	3.67
4			7.00	6.21
6			9.55	8.75
8	24.0	11.5	12.10	11.29
10			14.60	13.83

Applied Standards

JIS C 0806
TB0804 ～ TB2420
EIA-481-A
16, 24mm Embossed Tape

* For products other than those listed above or for custom items, please contact us.

OTAX Co., Ltd.
1215, Nippacho, Kohoku-ward,
Yokohama, Kanagawa, 223-8558 Japan
TEL: +81-45-543-5621（Representative）
Mail: sales@otax.co.jp
HP: https://www.otax-en.com/

DIP Switch | KHS Series | DIP Slide | SMD | 1,2,4,6,8,10 Poles

Tips for Switches

Pull-up and Pull-down of a microprocessor

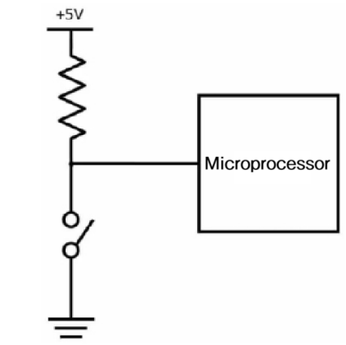

Pull-up Circuit

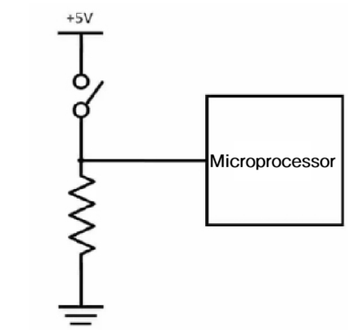

Pull-down Circuit

As a fundamental concept of microprocessors, one of the common stumbling blocks when first creating circuits using a microprocessor is understanding pull-up and pull-down resistors. As you may know, microprocessors operate using digital control with two values: High (1) and Low (0). Typically, the High level is connected to a power supply voltage known as Vdd (e.g., 5V, 3.3V, 1.7V, etc.). On the other hand, assuming that an unconnected pin will naturally be Low (0) is, in a sense, incorrect. This is because when a microprocessor's pin is left unconnected, it is said to be "floating" or in a "Hi-Z (high impedance)" state, which is electrically unstable and prone to noise and interference.

Therefore, it is standard practice to connect each pin to either the power supply (Vdd) or ground (Vss) through a resistor. When connected to Vdd, this is called a "pull-up" (which sets the default state to High), and when connected to Vss, it is called a "pull-down" (which sets the default state to Low). This approach electrically forces each pin into either the High or Low state.

Incidentally, in the case of a pull-up configuration, if a DIP switch is connected, turning the switch ON connects the line to ground, resulting in a digital Low (0). When the switch is OFF, the line remains pulled up to High (1).

* For products other than those listed above or for custom items, please contact us.

OTAX Co., Ltd.
1215, Nippacho, Kohoku-ward,
Yokohama, Kanagawa, 223-8558 Japan
TEL: +81-45-543-5621（Representative）
Mail: sales@otax.co.jp
HP: https://www.otax-en.com/