XR81111

Universal Clock - High Frequency LVPECL Clock Synthesizer

General Description

The XR81111-CA04 is a clock synthesizer with Integer divider, LVPECL driver, 3.3V/2.5V supply, taking a 25MHz Xtal input and providing one of four selectable output frequencies. The device is optimized for use with a 25MHz crystal (or system clock) and generates a selection of output frequencies - 156.25MHz for 10GE/XAUI, 150MHz for SAS, 125MHz for GE and 100MHz for PCIe applications.

The application diagram below shows a typical synthesizer configuration with any standard crystal oscillating in fundamental mode. Internal load capacitors are optionally available to minimize/eliminate external crystal loads. A system clock can also be used to overdrive the oscillator for a synchronous timing system.

The typical phase noise plot below shows the jitter integrated over the 12KHz to 20MHz range that is widely used in WAN systems. Most LAN applications however use the integration range of 1.875MHz to 20MHz. These clock devices show a very good high frequency noise floor below -150dB.

The XR81111 is a family of Universal Clock synthesizer devices in QFN-10 packages that are footprint compatible with industry standard 5mm x 7mm oscillators. The devices generate ANY frequency in the range of 100 MHz to 1.5GHz by utilizing a highly flexible delta sigma modulator and a wide ranging VCO. The high clock frequency LVPECL outputs have very low phase noise jitter of sub 0.6ps, while consuming extremely low power. These devices can be used with standard crystals or external system clock and can be configured to select from four different frequency multiplier settings to support a wide variety of applications. This family of products have an extremely low power PLL block with core power consumption less than 40% of the equivalent devices from competition. By second sourcing several of the existing sockets, these devices provides a very compelling power efficiency value benefit across all market segments.

Other clock multiplier and/or driver configurations are possible in this clock family and can be requested from the factory

The product (or products) mentioned in this data sheet are no longer being manufactured and may not be offered (OBS)

FEATURES

- XR81111-CA04: Factory Configured
- Footprint compatible with 5mm x 7mm differential oscillators
- One differential LVPECL output pair
- Crystal oscillator interface which can also be overdriven using a single-ended reference clock
- Output frequency range: 100MHz - 156.25MHz
- Crystal/input frequency: 25MHz, parallel resonant crystal
- VCO range: 2GHz - 3GHz
- RMS phase jitter @ 156.25MHz, 12kHz - 20MHz: <0.60ps
- Full 3.3V or 2.5V operating supply
- -40°C to 85°C ambient operating temperature
- Lead-free (RoHS 6) package

APPLICATIONS

- 10GE, GE LAN/WAN
- 2.5G/10G SONET/SDH/OTN
- xDSL, PCIe
- Low-jitter Clock Generation
- Synchronized clock systems

Ordering Information – page 12

Typical Application

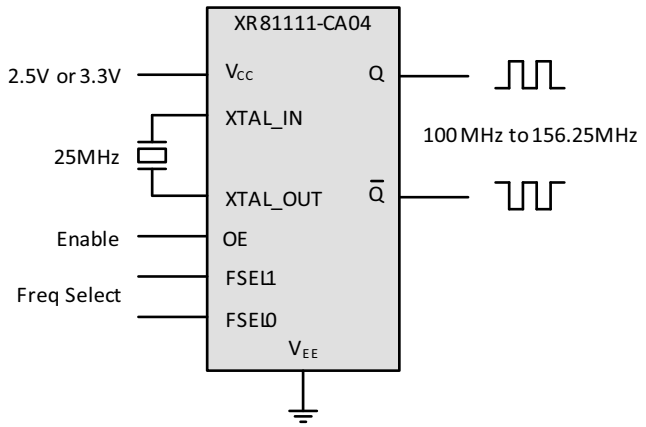

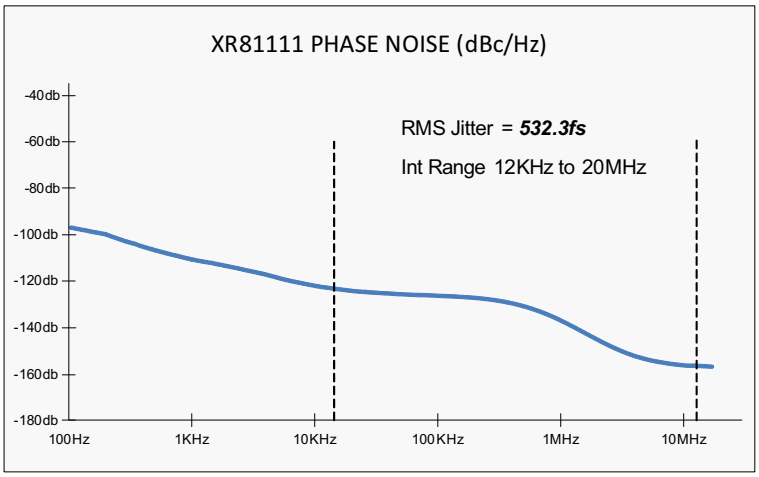

© 2014 Exar Corporation

Absolute Maximum Ratings

Stresses beyond those listed under Absolute Maximum Ratings may cause permanent damage to the device. Exposure to any Maximum Rating condition for extended periods may affect device reliability and lifetime.

Supply Voltage.....+4.2V

Input Voltage.....-0.5V to VCC + 0.5V

Output Voltage.....-0.5V to VCC + 0.5V

Reference Frequency/Input Crystal.....10MHz to 60MHz

Storage Temperature.....-55°C to +125°C

Lead Temperature (Soldering, 10 sec).....300°C

ESD Rating (HBM - Human Body Model).....2kV

Operating Conditions

Operating Temperature Range.....-40°C to +85°C

The product (or products) mentioned in this data sheet are no longer being manufactured and may not be ordered (OBS)

Electrical Characteristics

Unless otherwise noted: T_A = -40°C to +85°C, V_{CC} = 3.3V±5% or 2.5V±5%, V_{EE} = 0V

Symbol	Parameter	Conditions	*	Min	Typ	Max	Units
3.3V Power Supply DC Characteristics							
V_{CC}	Power Supply Voltage		•	3.135	3.3	3.465	V
I_{EE}	Power Supply Current	Measured at 156.25MHz and includes the output load current			68		mA
2.5V Power Supply DC Characteristics							
V_{CC}	Power Supply Voltage		•	2.375	2.5	2.625	V
I_{EE}	Power Supply Current	Measured at 156.25MHz and includes the output load current			58		mA

Symbol	Parameter	Conditions	*	Min	Typ	Max	Units
LVCMOS/LVTTL DC Characteristics							
V_{IH}	Input High Voltage	V_{CC} = 3.465V	•	2.42		V_{CC} + 0.3	V
		V_{CC} = 2.625V	•	1.83		V_{CC} + 0.3	V
V_{IL}	Input Low Voltage	V_{CC} = 3.465V	•	-0.3		1.03	V
		V_{CC} = 2.625V	•	-0.3		0.785	V
I_{IH}	Input High Current (OE, FSEL[1:0])	V_{IN} = V_{CC} = 3.465V or 2.625V	•			15	µA
I_{IL}	Input Low Current (OE, FSEL[1:0])	V_{IN} = 0V, V_{CC} = 3.465V or 2.625V	•	-10			µA
LVPECL DC Characteristics							
V_{OH}	Output High Voltage		•	V_{CC} - 1.3		V_{CC} - 0.4	V
V_{OL}	Output Low Voltage		•	V_{CC} - 2.0		V_{CC} - 1.6	V
V_{SWING}	Peak-to-Peak Output Voltage Swing		•	0.6		1.2	V
Crystal Characteristics							
X_{Mode}	Mode of Oscillations			Fundamental			
X_f	Frequency				25		MHz
ESR	Equivalent Series Resistance					50	Ω
C_S	Shunt Capacitance					7	pF
AC Characteristics							
f_{OUT}	Output Frequency	See Table 1.		100		156.25	MHz

The product (or products) mentioned in this data sheet are no longer being manufactured and may not be ordered (OBS)

©2014 Exar Corporation

Symbol	Parameter	Conditions	*	Min	Typ	Max	Units
$t_{jit}(\phi)$	RMS Phase Jitter	156.25MHz Integration Range 12kHz-20MHz			0.6		pS
		150MHz Integration Range 12kHz-20MHz			0.6		pS
		125MHz Integration Range 12kHz-20MHz			0.6		pS
		100MHz Integration Range 12kHz-20MHz			0.6		pS
t_{jit}(cc)	Cycle-to-Cycle Jitter	Using 25MHz, 18pF resonant crystal	•			10	pS
t_R/t_F	Output Rise/Fall Time	20% to 80%	•	100		450	pS
Odc	Output Duty Cycle		•	48		52	%

* Limits applying over the full operating temperature range are denoted by a "•".

The Product (or products) mentioned in this data sheet are no longer being manufactured and may not be ordered (OBS)

Pin Configuration

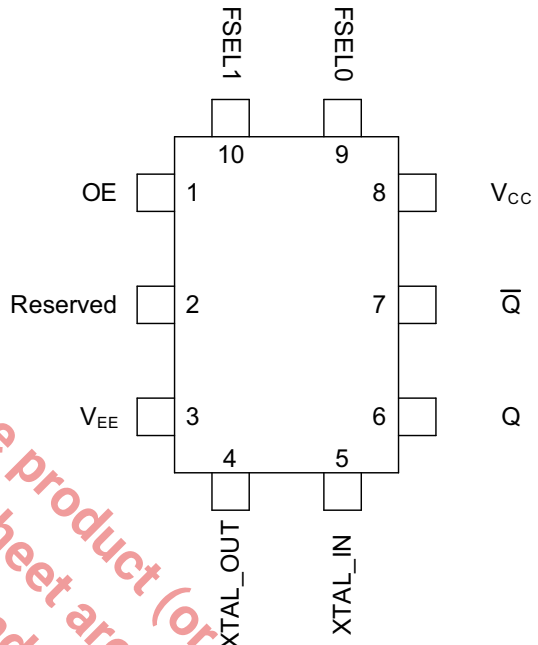

The product (or products) mentioned in this data sheet are no longer being manufactured and may not be ordered (OBS)

Pin Assignments

Pin No.	Pin Name	Type	Description
1	OE	Input (900KΩ pull-up)	Output enable pin - LVCMOS/LVTTL active high input. Outputs are enabled when OE = high. Outputs are disabled when OE = low.
2	Reserved		Reserved, leave this pin unconnected.
3	V_{EE}	Supply	Negative supply pin.
4	XTAL_OUT	Output	Crystal oscillator output.
5	XTAL_IN	Input	Crystal oscillator input.
6	Q	Output	Positive LVPECL output.
7	$\overline{Q}$	Output	Inverted LVPECL output.
8	V_{CC}	Supply	Power supply pin.
9	FSEL0	Input (900KΩ pull-dwn)	Output frequency select pin, LSB (LVCMOS/LVTTL input).
10	FSEL1	Input (900KΩ pull-dwn)	Output frequency select pin, MSB (LVCMOS/LVTTL input).

© 2014 Exar Corporation

Functional Block Diagram

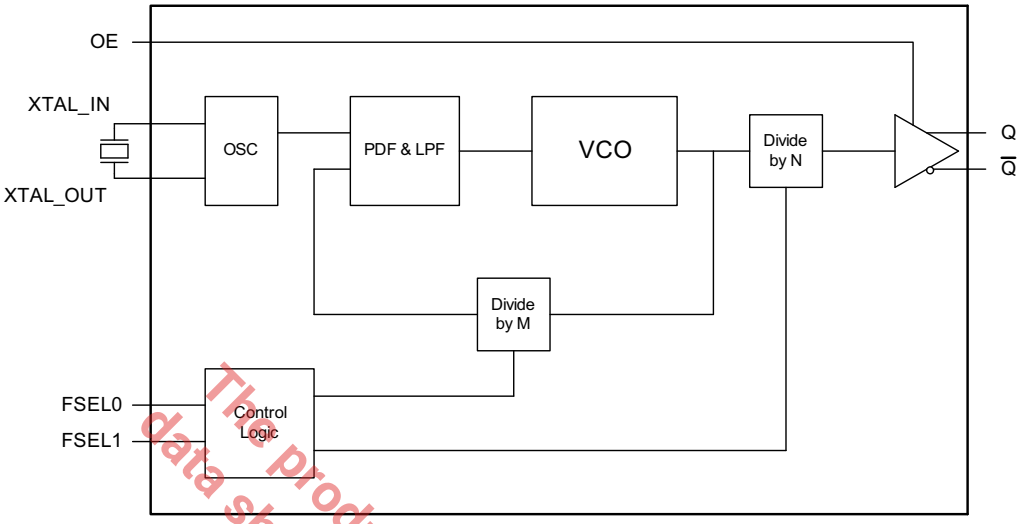

The product (or products) mentioned in this data sheet are no longer being manufactured and may not be ordered (OBS)

Typical Performance Characteristics

Figures 1,2,3 and 4 show typical phase noise performance plots for 156.25 MHz, 150MHz, 125M, and 100MHz clock outputs respectively. The data was taken using the industry standard Agilent E5052B instrument. The integration range is the widely referenced 12KHz to 20MHz range most often used in WAN applications.

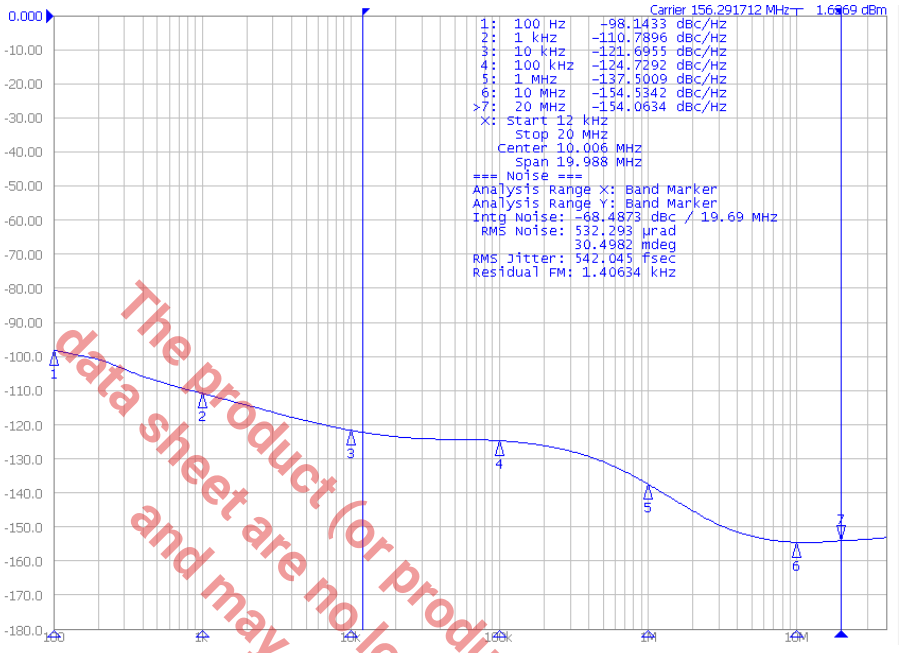

Figure 1: 156.25MHz Operation, Phase Noise at 3.3V

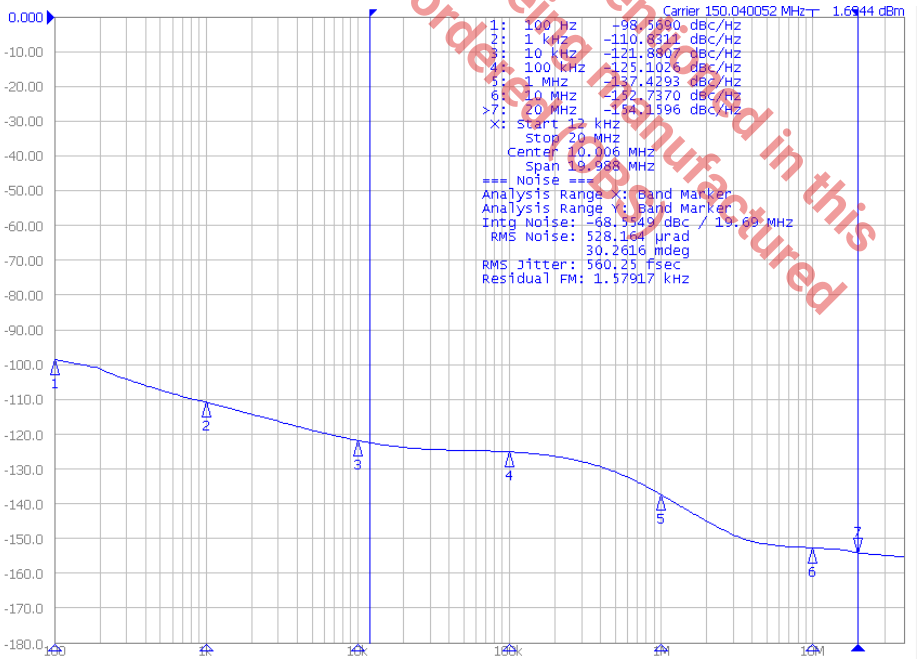

Figure 2: 150MHz Operation, Phase Noise at 3.3V)

The product (or products) mentioned in this data sheet are no longer being manufactured and may not be ordered.

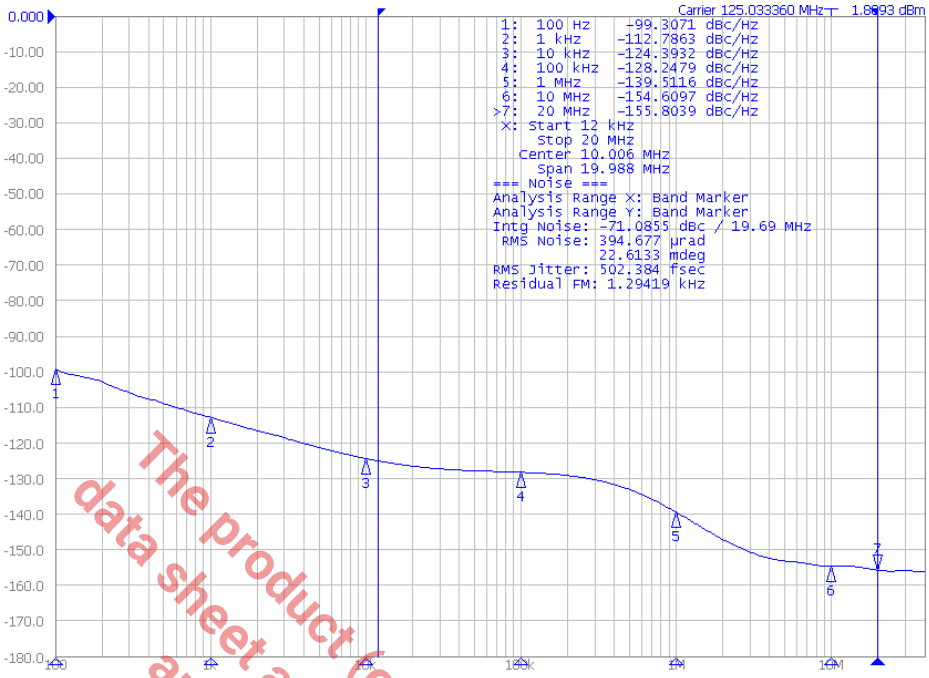

Figure 3: 125MHz Operation, Phase Noise at 3.3V

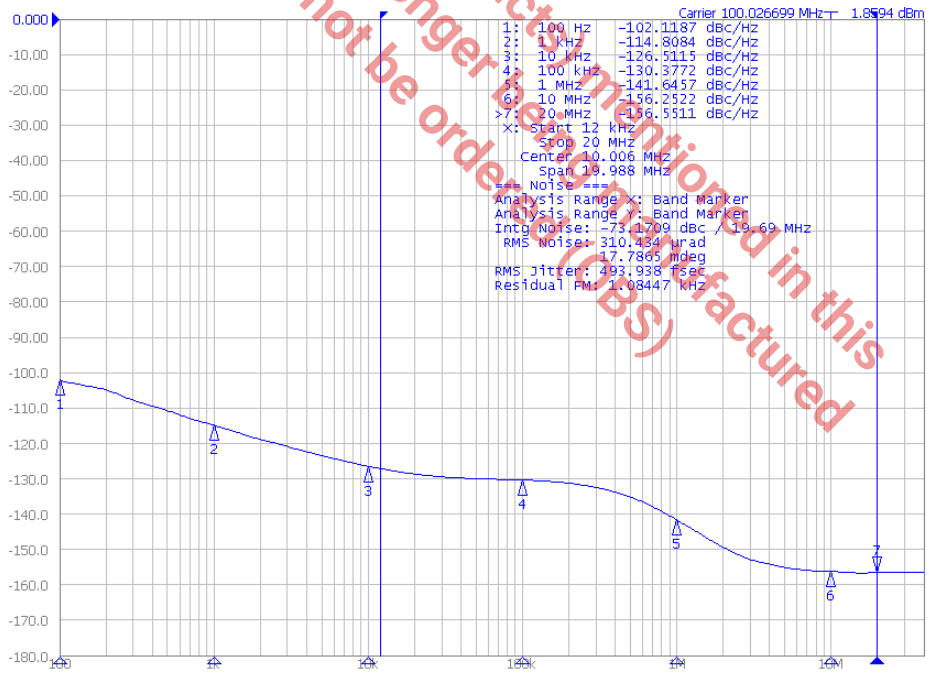

Figure 4: 100MHz Operation, Phase Noise at 3.3V

The product (or Product mentioned in this data sheet are no longer being manufactured and may not be ordered (OBS)

Application Information

Functional Truth Table

The XR81111-CA04 has two frequency select pins, FSLEL[1:0], that determine the output frequency from the device. With the two FSEL inputs, one of 4 different clock rates can be selected. This allows the XR81111-CA04 to support a variety of applications such as PCI Express, Ethernet, SAS and 10GE for example. If the FSEL pins are left floating, the XR81111-CA04 will default (with internal pull-down resistors on the FSEL inputs) to the 100MHz output configuration.

Table 1: Output Frequency Selection

FSEL[1:0]	XTAL (MHz)	Output Frequency (MHz)	Applications
00	25	100	PCI Express
01	25	125	Ethernet
10	25	150	SAS
11	25	156.25	10GE, XAUI

Termination for LVPECL Outputs

The termination schemes shown in Figure 5 and Figure 6 are typical for LVPECL outputs. Matched impedance layout techniques should be used for the LVPECL output pairs to minimize any distortion that could impact your maximum operating frequency. Figure 7 is an alternate termination scheme that uses a Y-termination approach.

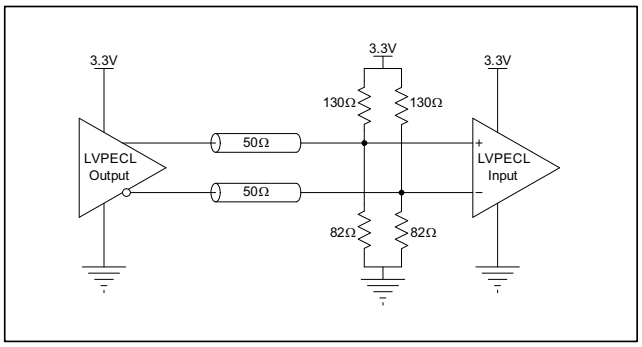

Figure 5: XR81111 3.3V LVPECL Output Termination

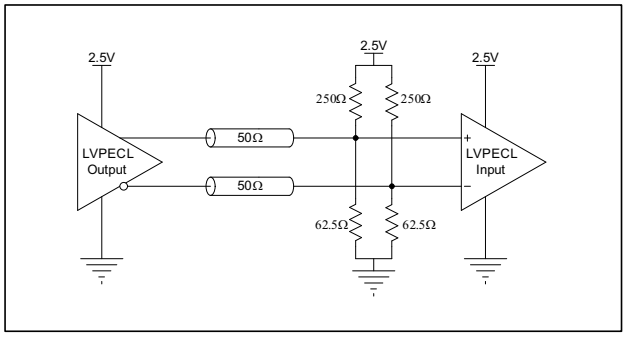

Figure 6: XR81111 2.5V LVPECL Output Termination

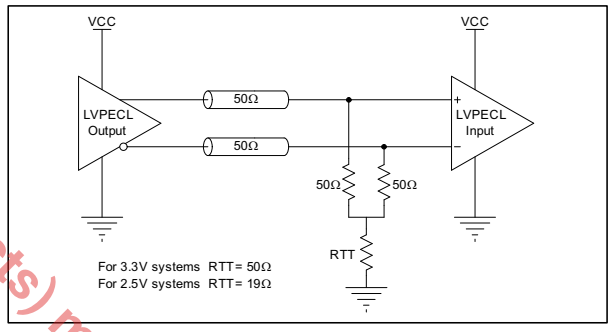

Figure 7: XR81111 Alternate LVPECL Output Termination Using Y-termination

Output Signal Timing Definitions

The following diagrams clarify the common definitions of the AC timing measurements.

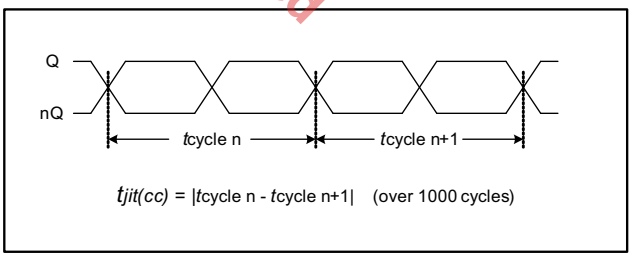

Figure 8: Cycle-to-Cycle Jitter

The product (or products) mentioned in this data sheet are no longer being manufactured and may not be ordered (OBS)

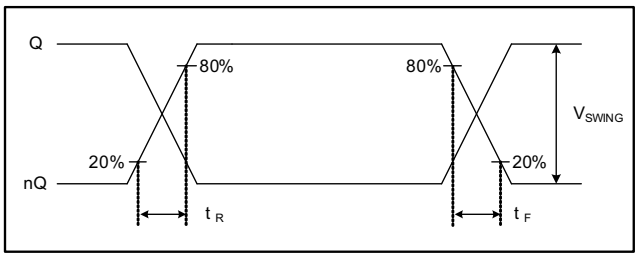

Figure 9: Output Rise/Fall Time and Swing

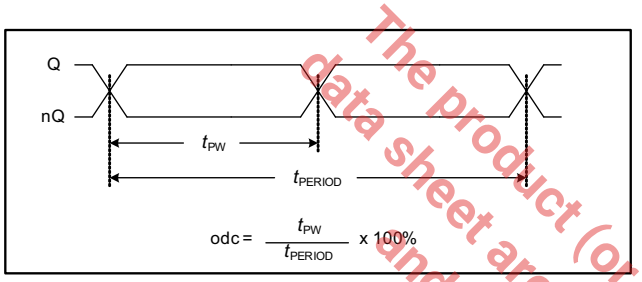

Figure 10: Output Period and Duty Cycle

The product (or products) mentioned in this data sheet are no longer being manufactured and may not be ordered (OBS)

Mechanical Dimensions

10-Pin QFN

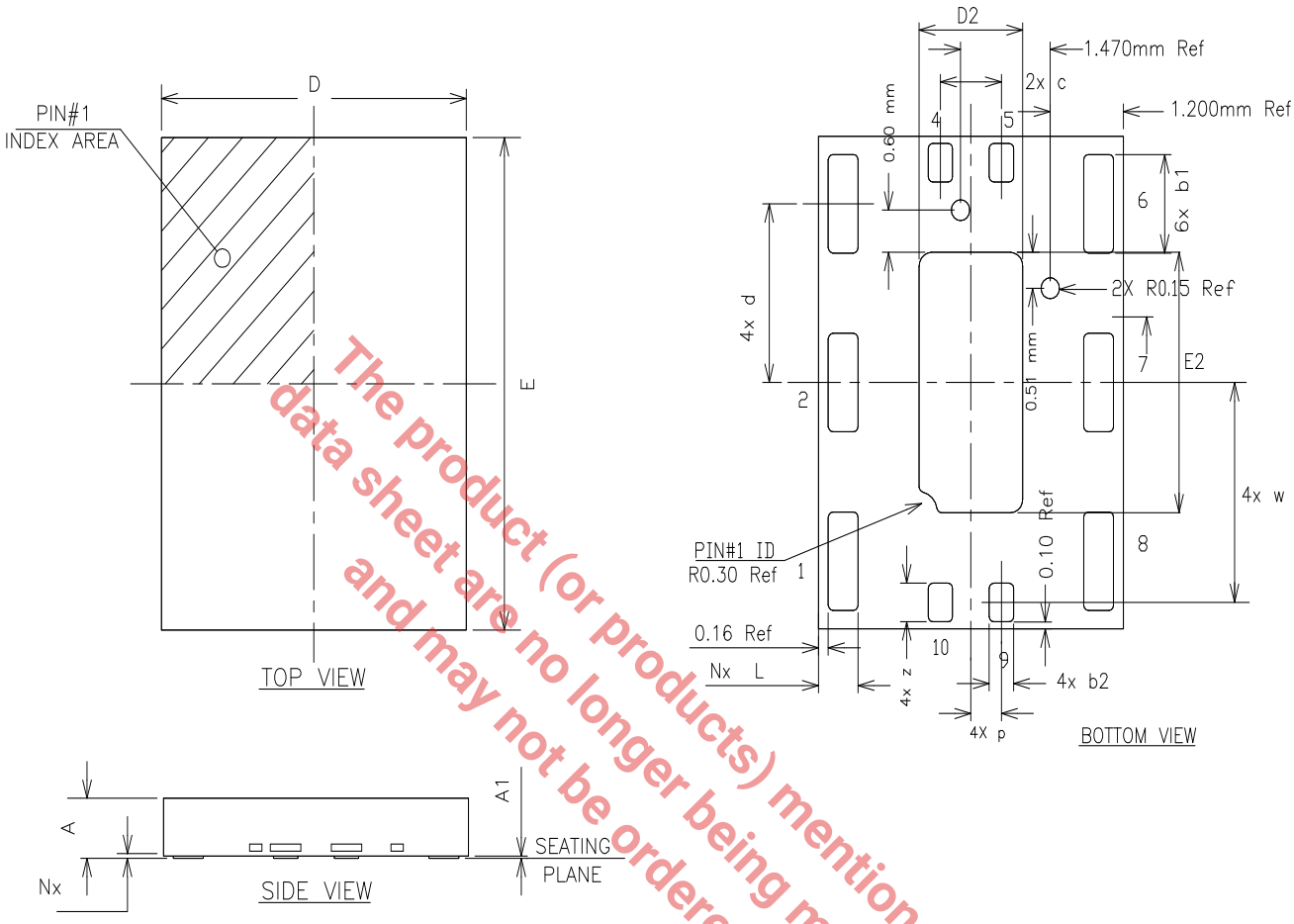

The product (or products) mentioned in this data sheet are no longer being manufactured and may not be ordered (OBS)

10LD 5x7mm QFN 1.00/2.54 PITCH						
SYMBOLS	DIMENSIONS IN MM (Control Unit)			DIMENSIONS IN INCH (Reference Unit)		
	MIN	NOM	MAX	MIN	NOM	MAX
A	0.80	0.90	1.00	0.031	0.035	0.039
A1	0.00	0.02	0.05	0.000	0.001	0.002
b1	1.35	1.40	1.45	0.053	0.055	0.057
b2	0.35	0.40	0.45	0.014	0.016	0.018
c		1.00 REF			0.039 REF	
d		2.54 REF			0.100 REF	
D		5.00 BSC			0.200 BSC	
E		7.00 BSC			0.280 BSC	
D2	1.55	1.70	1.80	0.061	0.067	0.071
E2	3.55	3.70	3.80	0.140	0.146	0.150
L	0.55	0.65	0.75	0.022	0.026	0.030
w		3.125 REF			0.123 BSC	
p		0.50 REF			0.020 BSC	
z		0.55 REF			0.022 BSC	
N		10			10	
ND		2			2	
NE		3			3	

© 2014 Exar Corporation

Ordering Information

Part Number	Package	Green	Operating Temperature Range	Shipping Packaging	Marking
XR81111-CA04-F	10-pin QFN	Yes	-40°C to +85°C	Tube/Tray	T111
XR81111-CA04TR-F	10-pin QFN	Yes	-40°C to +85°C	Tape & Reel	T111
XR81111EVB	Eval Board	N/A	N/A	N/A	N/A

Revision History

Revision	Date	Description
1A	April 2014	Initial release.
1B	April 28, 2014	Updates to general description and package drawing. [ECN1421-15 I 05/25/2014]

The product (or products) mentioned in this data sheet are no longer being manufactured and may not be ordered (OBS)

For Further Assistance:

Email: commtechsupport@exar.com

Exar Technical Documentation: http://www.exar.com/techdoc/

Exar Corporation Headquarters and Sales Offices
48720 Kato Road
Fremont, CA 95438 - USA
Tel: +1 (510) 668-7000
Fax: +1 (510) 668-7001

A New Direction in Mixed-Signal

NOTICE

EXAR Corporation reserves the right to make changes to the products contained in this publication in order to improve design, performance or reliability. EXAR Corporation assumes no responsibility for the use of any circuits described herein, conveys no license under any patent or other right, and makes no representation that the circuits are free of patent infringement. Charts and schedules contained herein are only for illustration purposes and may vary depending upon a user's specific application. While the information in this publication has been carefully checked; no responsibility, however, is assumed for inaccuracies.

EXAR Corporation does not recommend the use of any of its products in life support applications where the failure or malfunction of the product can reasonably be expected to cause failure of the life support system or to significantly affect its safety or effectiveness. Products are not authorized for use in such applications unless EXAR Corporation receives, in writing, assurances to its satisfaction that: (a) the risk of injury or damage has been minimized; (b) the user assumes all such risks; (c) potential liability of EXAR Corporation is adequately protected under the circumstances.

Reproduction, in part or whole, without the prior written consent of EXAR Corporation is prohibited.