DS44S-320/G

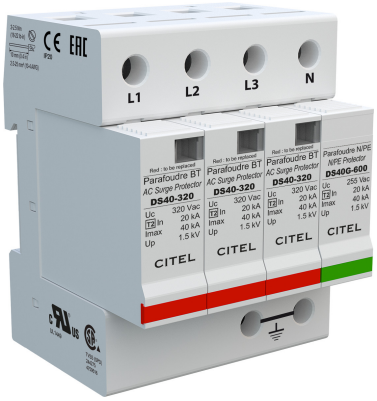

- MOV Technology
- UL1449 Type 4CA
- 40kA Surge Current Rating
- Visual fault indicator and remote contacts
- 10-Year warranty

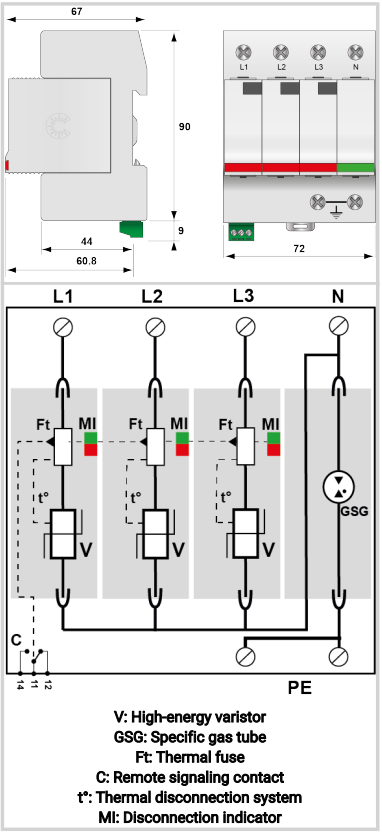

V: High-energy varistor
GSG: Specific gas tube
Ft: Thermal fuse
C: Remote signaling contact
t°: Thermal disconnection system
MI: Disconnection indicator

Electrical Characteristics		
Network		230/400V
Nominal line voltage	Un	230 Vac
Max. AC operating voltage	Uc	320 Vac
Max. discharge current *max. withstand @ 8/20 µs by pole*	Imax	40 kA
Total Maximum discharge current *max. total withstand @ 8/20 µs*	Imax Total	40 kA
Connection mode(s)		L/N and N/PE
Protection mode(s)		Common/Differential mode
Protection level L/N *@ In (8/20µs)*	Up L/N	1.5 kV
Protection level N/PE *@ In (8/20µs)*	Up N/PE	1.5 kV
POWER SPD TYPE		UL1449 5th Ed. TYPE 4CA
VOLTS	(V)	120/208/240
AC/DC/DC PV/RF		AC
PHASE	(PH)	3Y
AMPS	(A)	N/A
AMBIENT MIN	(C)	-40
AMBIENT MAX	(C)	+85
MODES		L-L, L-N, L-G, N-G
MLV	(V)	2720/1590/2280/1170
MCOV	(V)	600/320/320/255
IN *15 impulses 8/20µs*	(kA)	20
SCCR	(kA)	n/a
IMAX *8/20µs*	(kA)	40
Mechanical Characteristics		
Technology		MOV+GDT
Connection to Network		By screw terminals: 2.5-25mm² / by bus
Format		Plug-in modular box
Mounting		Symmetrical rail 35 mm (EN 60715)
Operating temperature	Tu	-40/+85°C
Protection rating		IP20
Failsafe mode		Disconnection from AC network
TECHNOLOGY		MOV+GSG
NETWORK CONFIGURATION		3PH, 4W+G, Wye
CONNECTION METHOD		SPD-Screw Terminal (8-12AWG), Terminal blocks 6AWG
MOUNTING		Wall mount
MATERIAL		Thermoplastic UL94-V0
NEMA RATING (IP RATING)		NEMA 2 (IP20)
FAIL-SAFE BEHAVIOR		Disconnection via fuse-link
REAL-TIME DIAGNOSTICS		Visual indicator and remote contacts
DIMENSIONS		See diagram
WEIGHT		1.20 lbs
SPARE PART		DSM40-320, DSM40G-600
Standards		
Certification		cRUus
Environmental standards		EU RoHS
UL STANDARD		UL1449 5th Edition
UL CATEGORY		VZCA2, VZCA8
UL FILE NUMBER		E326289
STANDARDS		NOM-003-SCFI-2014, NOM-001-SCFI-1993
Part number		
461932		