PMR209MC6220M220R19T0

Aliases (P409CP224M250LH221)

Not for New Design

PMR209, Film, Metallized Paper, Resistor/Capacitor, 0.22 uF, 20%, 630 VDC, 85°C, 20.3 mm

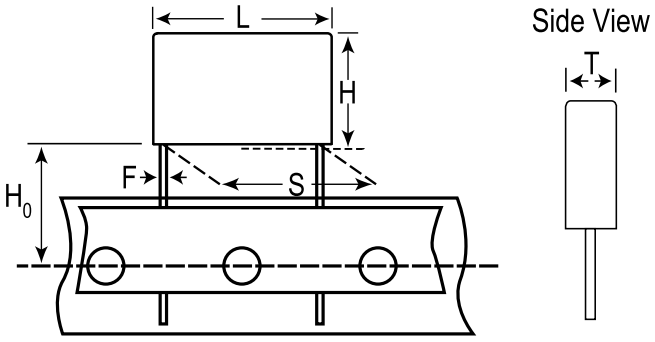

Click here for the 3D model.

General Information	
Series	PMR209
Dielectric	Metallized Paper
Style	Radial
Features	RC Unit approved
RoHS	Yes
Termination	Tinned Wire
Lead	Wire Leads
Qualifications	ENEC, UL, cUL
Construction	Molded
Typical Component Weight	6.3 g
Miscellaneous	Resistor= 220 Ohms.
Notes	Not For New Design, Please Use The New P409 Series @ 275 VAC.

Dimensions	
L	24mm MAX
H	16.5mm MAX
T	11.3mm MAX
S	20.3mm +0.6/-0.1mm
H0	18.5mm +/-0.5mm
F	0.8mm +/-0.05mm

Packaging Specifications	
Packaging	T&R
Packaging Quantity	180

Specifications	
Capacitance	0.22 uF
Tolerance	20%
Voltage DC	630 VDC
Voltage AC	250 VAC
Temperature Range	-40/+85°C
Rated Temperature	85°C
Insulation Resistance	3 GOhms
Safety Class	X2

Statements of suitability for certain applications are based on our knowledge of typical operating conditions for such applications, but are not intended to constitute - and we specifically disclaim - any warranty concerning suitability for a specific customer application or use. This Information is intended for use only by customers who have the requisite experience and capability to determine the correct products for their application. Any technical advice inferred from this Information or otherwise provided by us with reference to the use of our products is given gratis, and we assume no obligation or liability for the advice given or results obtained.

© 2006 - 2026 YAGEO