FLLD3007AMHT3

Aliases (LLD3007AMHT3)

Obsolete

EMI Filters, KEMET, FLLD3-MH, Chassis Mount, Noise Suppression, 160x40x70mm

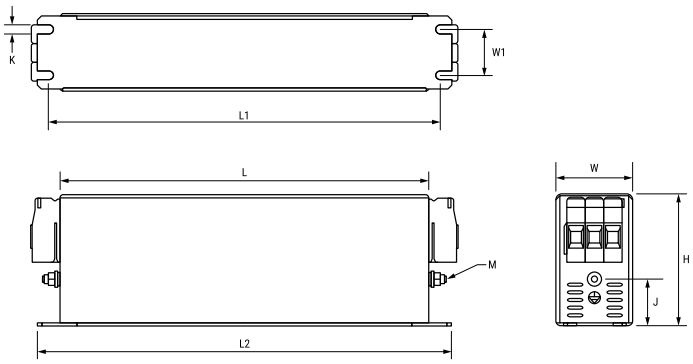

Click here for the 3D model.

General Information	
Series	FLLD3-MH
Style	Chassis Mount
Description	EMI Filter, Chassis Mount, Motor Drives
Features	Three Phase, High Performance, High Voltage
Phase	Three-phase
RoHS	Yes
Qualifications	IEC/EN 60939, UL 1283
Lead	Threaded Studs M5
Terminal Type	Threaded Studs M5

Dimensions	
L	160mm NOM
W	40mm NOM
H	70mm NOM
L1	180mm NOM
L2	190mm NOM
W1	20mm NOM
J	22mm NOM
K	4.5mm NOM
M (Earth)	Threaded Studs M5
Lead	Threaded Studs M5

Packaging Specifications	
Packaging	Bulk
Packaging Quantity	1
Typical Component Weight	500 g

Specifications	
Voltage AC	530 VAC, 305 VAC
Rated Frequency	50-60 Hz
Rated Current	7 A (50°C)
Ripple Current	7 A (50°C)
Rated Temperature	50°C
Temperature Range	-25/+100°C
Climate Category	25/100/21
Test Voltage DC (P to P)	2250 VDC
Test Voltage DC (P to E)	3000 VDC
Max Power Loss	4 W (25°C 50 Hz)
Leakage Current	3.1 mA

Statements of suitability for certain applications are based on our knowledge of typical operating conditions for such applications, but are not intended to constitute - and we specifically disclaim - any warranty concerning suitability for a specific customer application or use. This Information is intended for use only by customers who have the requisite experience and capability to determine the correct products for their application. Any technical advice inferred from this Information or otherwise provided by us with reference to the use of our products is given gratis, and we assume no obligation or liability for the advice given or results obtained.

© 2006 - 2026 YAGEO