# 14.2GHz Surface Mount Bandpass Filter
## B142LA2S

www.knowlescapacitors.com

### DESCRIPTION

DLI's surface mount bandpass filters utilize DLI's low loss temperature stable materials which offer small size and minimal performance variation over temperature. The catalog BPF's are offered in a variety of frequency bands, which offers a drop in solution with highly repeatable performance.

### FEATURES

- Small Size
- Fully Shielded Component
- Solder Surface Mount Package
- Moisture Sensitivity Level: MSL1
- Frequency Stable over Temperature
- Operating & Storage Temp: -55˚C to +125˚C
- Characteristic Impedance: 50Ω

### Packaging and Ordering Information:

To request tape and reel packaging, please order part number B142LA2S-T, see additional data on page 5.

### SPECIFICATIONS*

| Parameter | Frequency Range (GHz) | Min | Typ. | Max |
|---|---|---|---|---|
| **Insertion Loss (dB)** | 14.0 - 14.5 | | 4.0 | 4.25 |
| **Return Loss (dB)** | | 10.0 | 15.0 | |
| **Low Side Rejection (dB)** | DC - 13.4 | 40.0 | 45.0 | |
| **High Side Rejection (dB)** | 15.25 - 23.5 | 40.0 | 45.0 | |
| **CW Input Power** (W)** | | | | 5 |
| $\theta_{JC}$ $\left(\frac{°C}{W}\right)$ | 15 | | | |
| **Size (L x W x H)** | 0.575 x 0.200 x 0.093 in<br>14.61 x 5.08 x 2.11 mm | | | |

*Electrical specifications based on typical probed performance at room temperature. Insertion loss shall vary ±0.5dB over temperature.

**Power rating assumes the component will be mounted to a PCB with good thermally conducting ground vias as outlined in the recommended PCB layout that are connected to an adequate heat sink. Max power is based on 125°C base temperature.

Information in this document is for informational and guideline purposes only. All information regarding the Product described in this datasheet is subject to change from time to time at Knowles Precision Devices' sole discretion. It is the customer's sole responsibility to evaluate the suitability of the Product in the customer's particular application. Knowles Precision Devices assumes no responsibility or liability for the use of the information contained within.

2777 Route 20 East, Cazenovia, NY 13035| Ph.: (315)655-8710

To Order Contact KCCSales@knowles.com | For Technical Inquiries Contact DLIengineering@knowles.com

## Typical Measured Performance

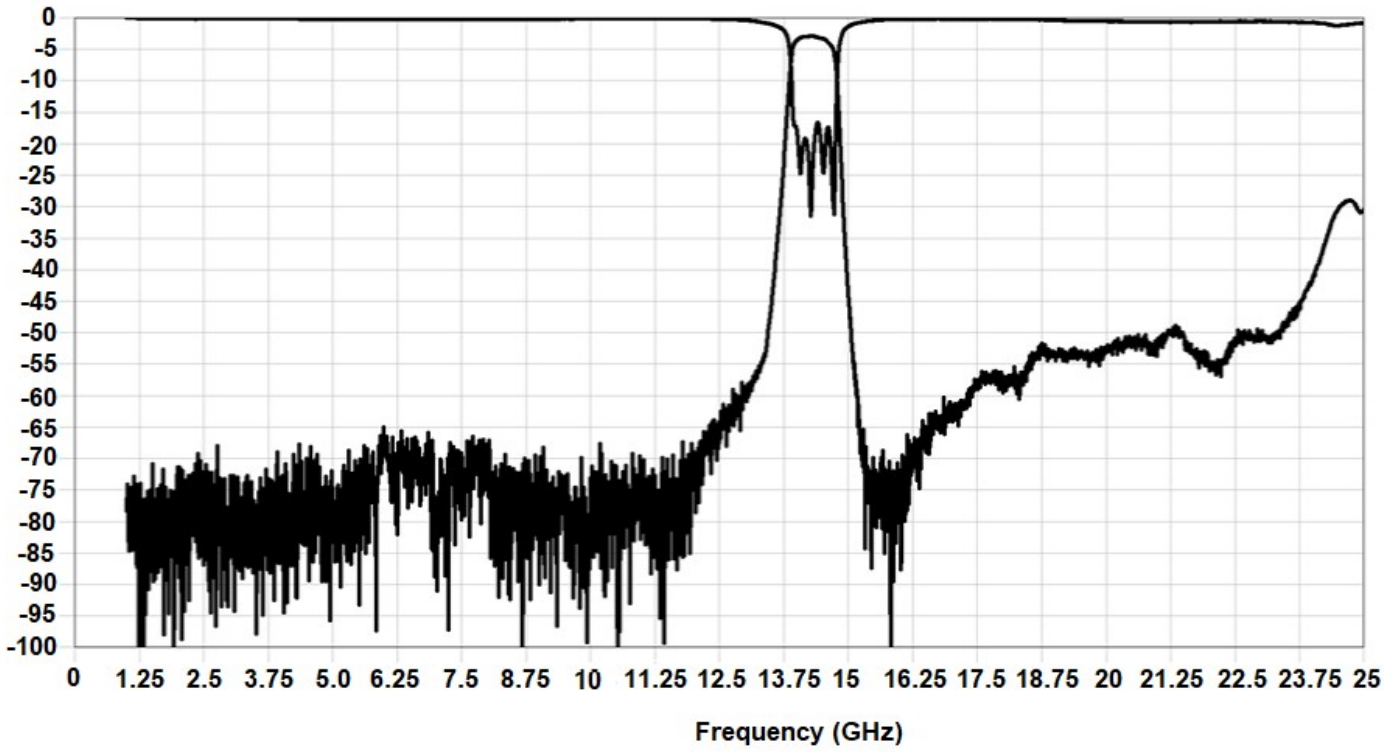


*Typical de-embedded measured performance mounted on a connectorized test fixture. DEB is 0.010in RO4350B with 50.0Ohm CPW ground traces going into the ports at room temperature.

# 14.2GHz Surface Mount Bandpass Filter
## B142LA2S

www.knowlescapacitors.com

## Physical Dimensions

Units = inches

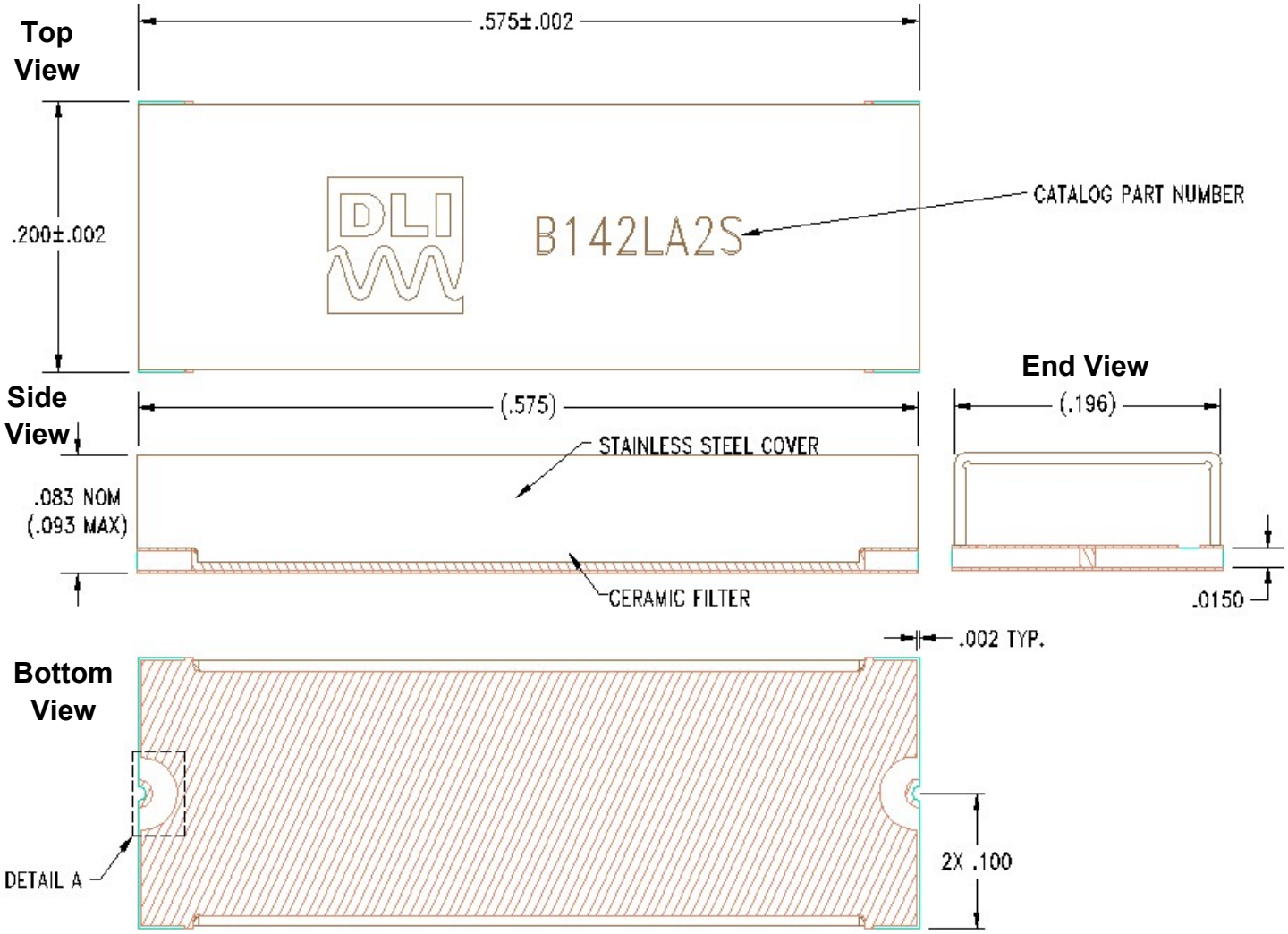


**Notes :**

1. Termination Finish:

   ENIG: 3 - 6 µinch Au over 50 µinch Ni

2. Maximum Assembly Process Temperature: 250°C

**Tolerances:**

For values with 3 decimal places ±0.001

For values with 4 decimal places ±0.0005

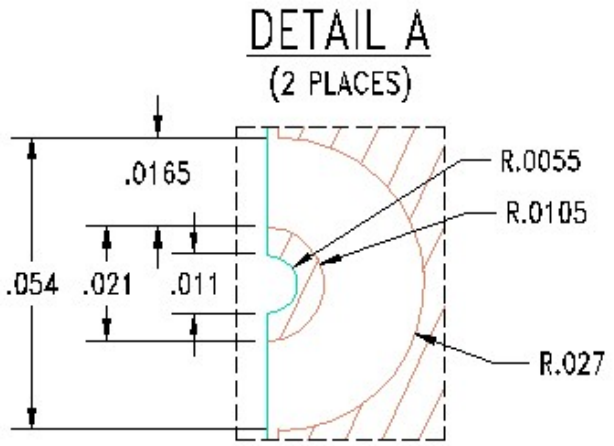



2777 Route 20 East, Cazenovia, NY 13035| Ph.: (315)655-8710

To Order Contact KCCSales@knowles.com | For Technical Inquiries Contact DLIengineering@knowles.com

## Recommended PCB Layout

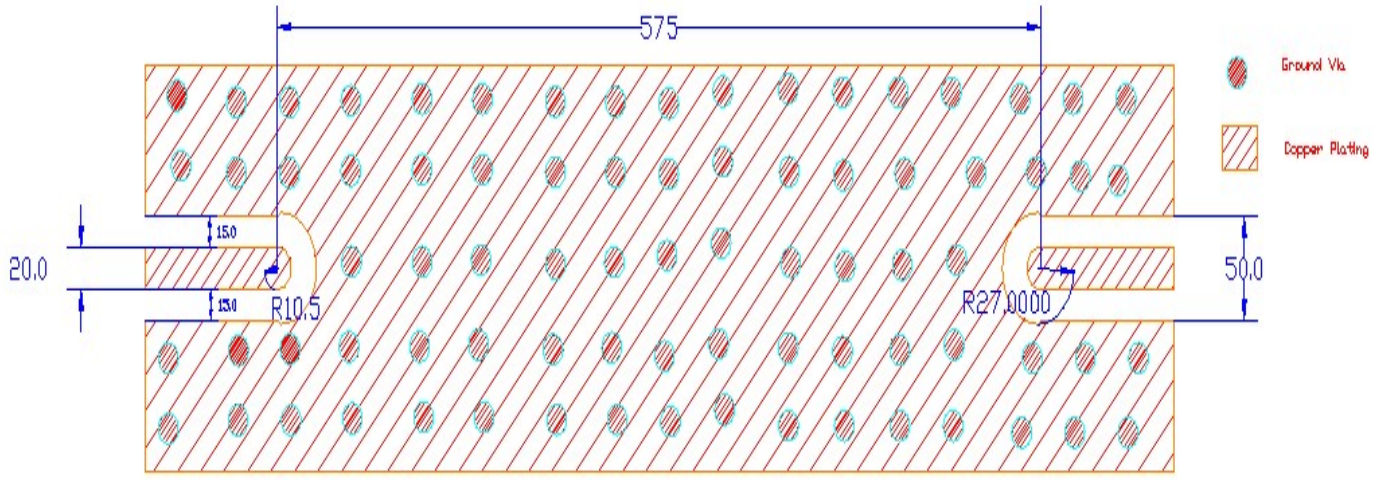


**Note:**

Unit = mils

- 50Ω trace dimensions are application specific.
- Ensure adequate grounding beneath the part.

For further details and best practices, reference the **Microwave Products Guide,** available at: https://www.knowlescapacitors.com/Support/Catalogs

2777 Route 20 East, Cazenovia, NY 13035| Ph.: (315)655-8710

To Order Contact KCCSales@knowles.com | For Technical Inquiries Contact DLIengineering@knowles.com

## TAPE AND REEL INFORMATION

### REEL DIMENSIONS

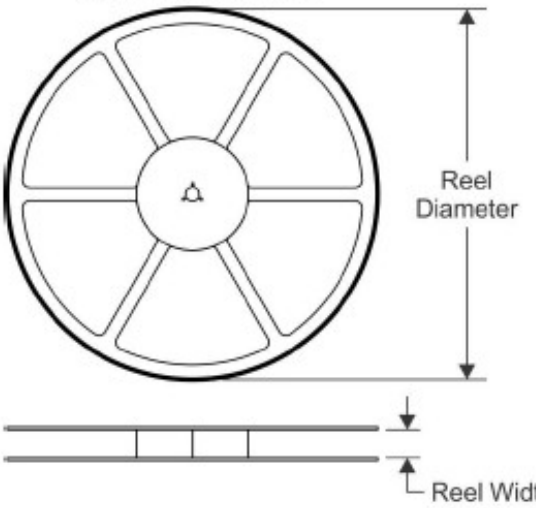


### TAPE DIMENSIONS

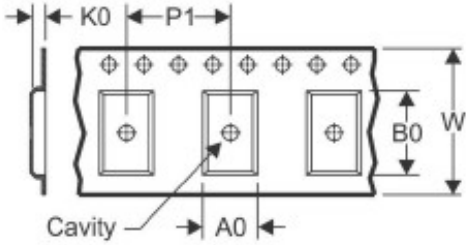


| | |
|---|---|
| A0 | Dimension designed to accommodate the component width |
| B0 | Dimension designed to accommodate the component length |
| K0 | Dimension designed to accommodate the component thickness |
| W | Overall width of the carrier tape |
| P1 | Pitch between successive cavity centers |

### QUADRANT ASSIGNMENTS FOR PIN 1 ORIENTATION IN TAPE

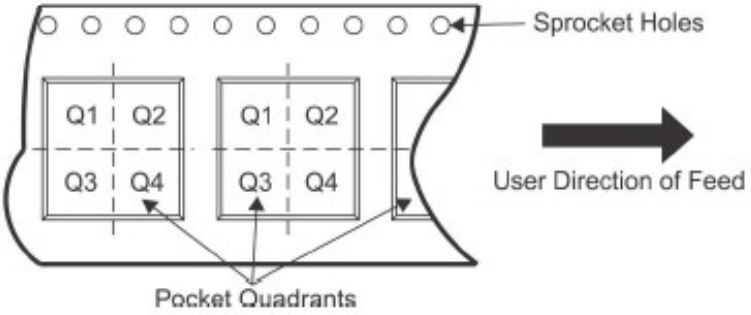


*All dimensions are nominal

| Device | Package Type | Reel Diameter (mm) | Reel Width W1 (mm) | A0 (mm) | B0 (mm) | K0 (mm) | P1 (mm) | W (mm) | Pin1 Quadrant |
|---|---|---|---|---|---|---|---|---|---|
| B142LA2S-T | SMD | 180 | 24.4 | 5.5 | 15.6 | 2.8 | 12 | 24 | Q1&2 |