XRT8000

Clock Synchronizer/Adapter for Communications

September 2006

FEATURES

- Clock Adaptation for Most Popular Telecommunication Frequencies
- Wide Input Frequency Range
- Programmable Output Frequencies
- Less than 0.05UI Wide Band Output Jitter
- Low Power Operation (5V and 3.3V)
- Maximum Lock Time of 45mS
- Cascadable
- No External Components Needed
- Lock Detect Indication Pin

APPLICATIONS

- DSU's, CSU's and Access Equipment
- ISDN Terminals
- Concentrators and Multiplexers

The product(s) mentioned in this data sheet are no longer being manufactured and may not be ordered (OBS)

GENERAL DESCRIPTION

The XRT8000 is a dual phase-locked loop chip that generates two simultaneous, very low jitter, output clocks for synchronization applications in wide area networking systems. The outputs are phase locked to the input signal. The chip has four basic modes of operation; referred to as master (FORWARD, REVERSE) and slave (FORWARD, REVERSE) modes (See Figure 1). In the FORWARD mode it accepts up to 16th harmonic of either 1.544MHz or 2.048MHz as input reference and generates 1.2kHz and multiples of 2.4kHz, 56kHz or 64kHz. In the REVERSE mode an input clock of 56kHz or 64kHz is used to generate 1.544MHz or 2.048MHz output clocks. The SLAVE (FORWARD, REVERSE) modes generate the same output frequencies as the MASTER (FORWARD/ REVERSE MODES) except that the input frequency (F_{IN}) is 8kHz. An optional divide by eight can be enabled at each of the outputs.

The input and output frequency selection can be done through a serial microprocessor interface. The XRT8000 is available in either 18 pin SOIC package or 18 pin plastic DIP.

ORDERING INFORMATION

Part No.	Package	Operating Temperature Range
XRT8000IP	18 Lead 300 Mil PDIP	-40°C to +85°C
XRT8000ID	18 Lead 300 Mil JEDEC SOIC	-40°C to +85°C

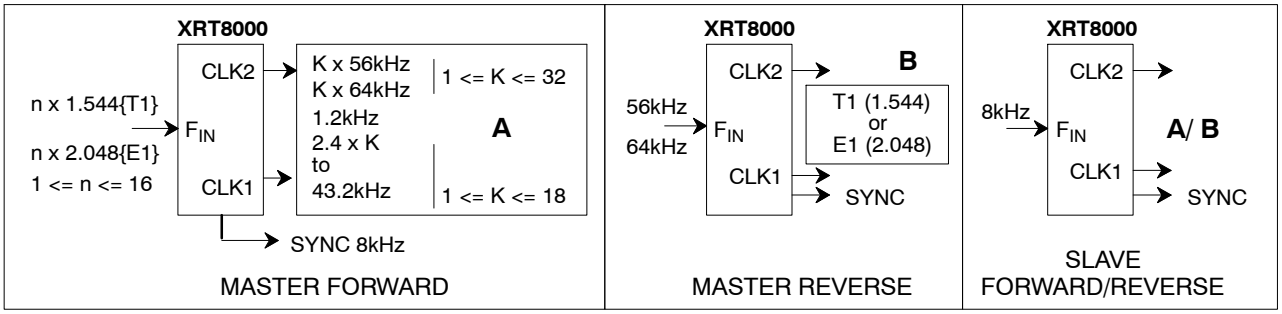

Figure 1. System Diagram

©1999–2006

EXAR Corporation, 48720 Kato Road, Fremont, CA 94538 z (510) 668-7000 z FAX (510) 668-7017 z www.exar.com

BLOCK DIAGRAM

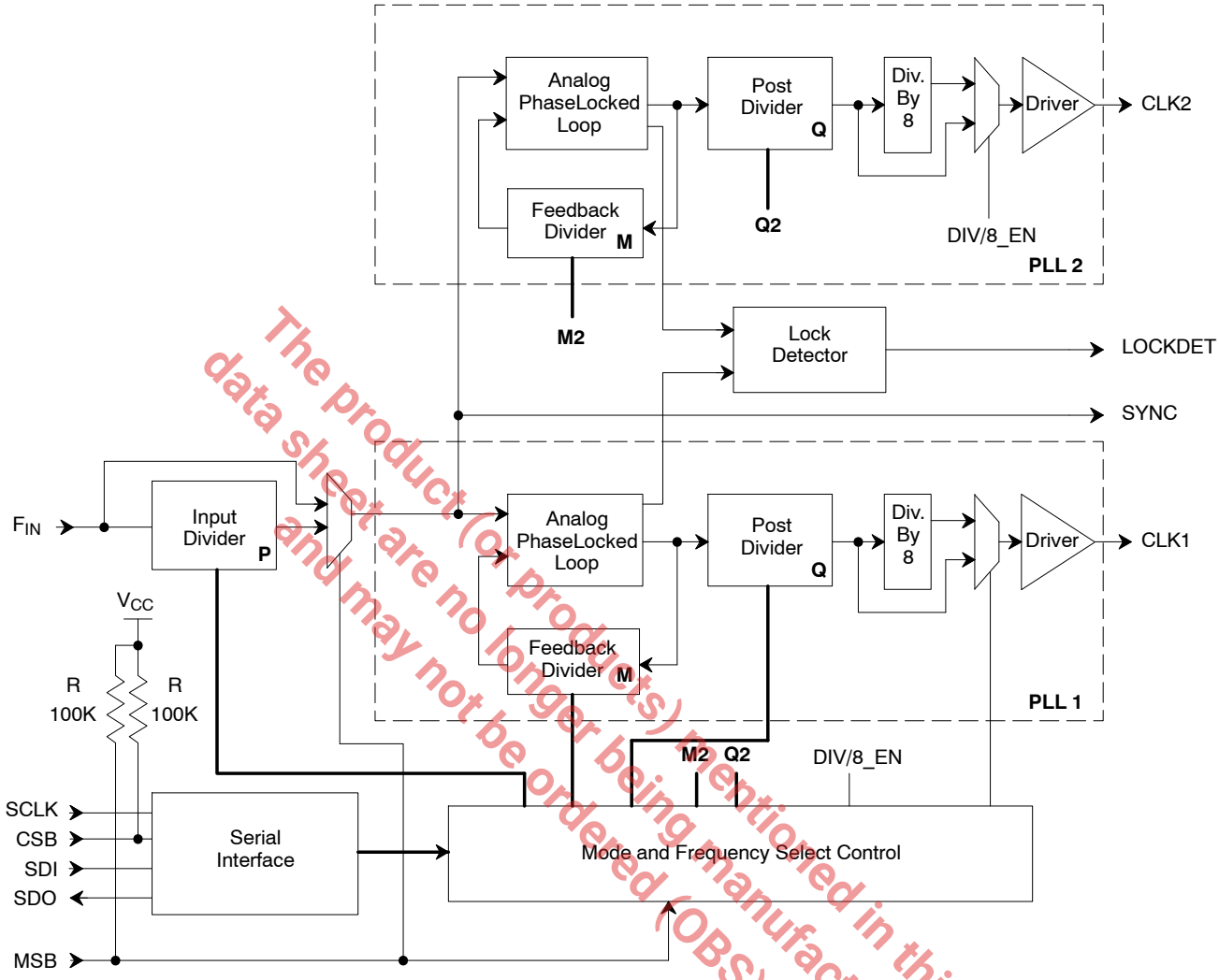

The product (or products) mentioned in this data sheet are no longer being manufactured and may not be ordered (OBS)

Figure 2. Block Diagram

PIN CONFIGURATION

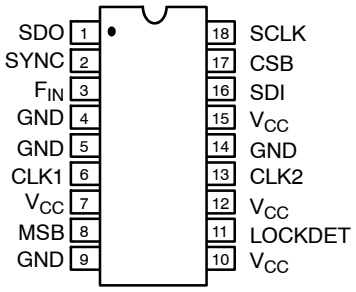

18 Lead PDIP (0.300")

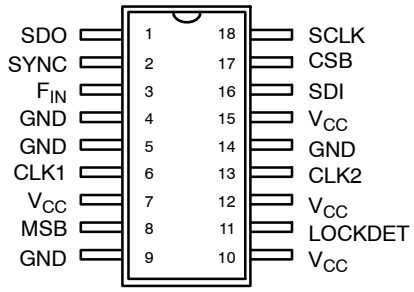

18 Lead SOIC (Jedec, 0.300")

The product (or products) mentioned in this data sheet are no longer being manufactured and may not be ordered (OBS)

PIN DESCRIPTION

Symbol	Pin#	Type	Description
SDO	1	O	**Serial Data Output (Microprocessor Serial Interface).** Data output from the command registers.
SYNC	2	O	**An 8kHz Signal SubDivided From F_{IN}.** This output can be threestated via CR5. SYNC can be used to synchronize other XRT8000 which are configured in slave modes.
F_{IN}	3	I	**Reference Frequency Input.**
GND	4		**Digital Ground.**
GND	5		**Digital Ground.**
CLK1	6	O	**Clock 1.** Output of the phase-locked loop 1.
V_{CC}	7		**Digital Positive Power Supply.**
MSB	8	I	**Master/Slave Mode Select Input.** If this input is high, then the MASTER mode is selected. If this input is low, then the SLAVE mode is enabled. This pin is internally pulled up via 100KΩ resistor.
GND	9		**Analog Ground.**
V_{CC}	10		**Analog Positive Supply.**
LOCKDET	11	O	**Lock Detect.** This output is high when both phase-locked loops are in lock and will go low if either one of the phase locked loops loses lock.
V_{CC}	12		**Digital Positive Power Supply.**
CLK2	13	O	**Clock 2.** Output of the phase-locked loop 2.
GND	14		**Digital Ground.**
V_{CC}	15		**Digital Positive Power Supply.**
SDI	16	I	**Serial Data Input (Microprocessor Serial Interface)** Data input to the command registers.
CSB	17	I	**Chip Select Not (Microprocessor Serial Interface) .** When this input is low the data in and out will be shifted in the appropriate registers. Internal pull up (100K).
SCLK	18	I	**Serial Clock Input (Microprocessor Serial Interface) .** This clock will serve as a reference to the data streams to SDI and SDO (the positive edge of SCLK is used to latch the data).

DC ELECTRICAL CHARACTERISTICS (Except Serial Interface) Operating Temperature: -40°C to 85°C
Test Conditions: T_A = 25°C, V_{CC} = 5.0V ± 5% Unless Otherwise Specified

Symbol	Parameter	Min	Typ	Max	Unit	Conditions
V_{IL}	Input low level			0.8	V	
V_{IH}	Input high level	2.0			V	
V_{OL}	Output low level (CLK1,CLK2)			0.4	V	I_{OL} = -6.0 mA
V_{OH}	Output high level (CLK1,CLK2)	2.4			V	I_{OH} = 6.0 mA
V_{OL}	Output low level (LOCKDET,SYNC)			0.4	V	I_{OL} = -3.0 mA
V_{OH}	Output high level (LOCKDET,SYNC)	2.4			V	I_{OH} = 3.0 mA
I_{IL}	Input low current (CSB,MSB)			-150	µA	
I_{IH}	Input high current (CSB,MSB)			10	µA	$V_{IN} = V_{CC}$
I_{IL}	Input low current (except CSB,MSB)	-10			µA	
I_{IH}	Input high current (except CSB,MSB)			10	µA	$V_{IN} = V_{CC}$
I_{CC}	Operating current		20	35	mA	No load. Clock = 2.1 MHz
R_{IN}	Input pull-up resistance (CSB,MSB)	50	100	150	KΩ	

AC ELECTRICAL CHARACTERISTICS (See Figure 3)

Symbol	Parameter	Spec.[3]	Min	Typ	Max	Unit	Conditions
T_1	Input frequency		0.008		32.7	MHz	
T_2	Minimum input signal high to low duration		12			ns	
T_3	Output frequency		1.2		2.1	KHz	
T_6[1]	Duty cycle CLK1, CLK2		47.5	50	52.5	%	V_{CC}/2 switch point. 30pF load.
T_7[4]	Jitter added 8KHz-40KHz	0.025		0.007	0.02	UI	Output =1.544MHz
T_7[4]	Jitter added 10Hz-40KHz	0.025		0.022		UI	Output =1.544MHz
T_7[4]	Broad Band-jitter	0.05		0.03	0.05	UI	Output =1.544MHz
T_7[4]	Jitter added 20Hz-100KHz	1.5		0.05	0.07	UI	Output =2.048MHz
T_7[4]	Jitter added 18kHz-100KHz	0.2		0.01	0.03	UI	Output =2.048MHz
T_8	Capture time				40	ms	
T_9	Clock output rise time				10	ns	30pF load. Measured at 20/80 %
T_{10}	Clock output fall time				10	ns	30pF load. Measured at 20/80 %
T_{11}[2]	Duty cycle SYNC		40		60	%	V_{CC}/2 switch point (in master forward mode). 30pF load.
T_{14}	Delay time between the rising edge of SYNC and the rising edge of CLK1 or CLK2		T-20	T	T+20	ns	See table 12 for values of T

Notes:

[1] $T_6 = \frac{T4}{(T4 + T5)}$

[2] $T_{11} = \frac{T12}{(T12 + T13)}$

[3] *Specifications from AT&T Publication 62411 and ITU-T Recommendations G-823 (for 1.544MHz and 2.048MHz, respectively).*

[4] *T_7 is guaranteed by characterization, not tested.*

Specifications are subject to change without notice.

The product (or products) mentioned in this data sheet are no longer being manufactured and may not be ordered (OBS)

DC ELECTRICAL CHARACTERISTICS (Except Serial Interface) Operating Temperature: -40°C to 85°C
Test Conditions: T_A = 25°C, V_{CC} = 3.3V ± 5% Unless Otherwise Specified

Symbol	Parameter	Min	Typ	Max	Unit	Conditions
V_{IL}	Input low level			0.8	V	
V_{IH}	Input high level	2.0			V	
V_{OL}	Output low level (CLK1,CLK2)			0.4	V	I_{OL} = -3 mA
V_{OH}	Output high level (CLK1,CLK2)	2.4			V	I_{OH} = 3 mA
V_{OL}	Output low level (LOCKDET,SYNC)			0.4	V	I_{OL} = -2.5 mA
V_{OH}	Output high level (LOCKDET,SYNC)	2.4			V	I_{OH} = 2.5 mA
I_{IL}	Input low current (CSB,MSB)			-150	µA	
I_{IH}	Input high current (CSB,MSB)			10	µA	$V_{IN} = V_{CC}$
I_{IL}	Input low current (except CSB,MSB)	-10			µA	
I_{IH}	Input high current (except CSB,MSB)			10	µA	$V_{IN} = V_{CC}$
I_{CC}	Operating current		11	30	mA	No load. Clock = 2.1 MHz
R_{IN}	Input pull-up resistance (CSB,MSB)	50	100	150	KΩ	

AC ELECTRICAL CHARACTERISTICS (See Figure 3)

Symbol	Parameter	Spec.[3]	Min	Typ	Max	Unit	Conditions
T_1	Input frequency		0.008		32.7	MHz	
T_2	Minimum input signal high to low duration		12			ns	
T_3	Output frequency		1.2		2.1	KHz	
T_6[1]	Duty cycle CLK1, CLK2		47.5	50	52.5	%	V_{CC}/2 switch point. 30pF load.
T_7[4]	Jitter added 8KHz-40KHz	0.025		0.01	0.02	UI	Output =1.544MHz
T_7[4]	Jitter added 10Hz-40KHz	0.025		0.030		UI	Output =1.544MHz
T_7[4]	Broad Band	0.05		0.035	0.05	UI	Output =1.544MHz
T_7[4]	Jitter added 20Hz-100KHz	1.5		0.045	0.07	UI	Output =2.048MHz
T_7[4]	Jitter added 18kHz-100KHz	0.2		0.010	0.03	UI	Output =2.048MHz
T_8	Capture time				40	ms	
T_9	Clock output rise time				14	ns	30pF load. Measured at 20/80 %
T_{10}	Clock output fall time				14	ns	30pF load. Measured at 20/80 %
T_{11}[2]	Duty cycle SYNC		40		60	%	V_{CC}/2 switch point (in master forward mode). 30pF load.
T_{14}	Delay time between SYNC and CLK1 or CLK2		T-20	T	T+20	ns	See table 12 for values of T

Notes:

[1] $T_6 = \frac{T4}{(T4 + T5)}$

[2] $T_{11} = \frac{T12}{(T12 + T13)}$

[3] *Specifications from AT&T Publication 62411 and ITUT Rcommendations G-823 (for 1.544MHz and 2.048MHz, respectively)*

[4] *T_7 is guaranteed by characterization, not tested.*

Specifications are subject to change without notice.

The product(or products) mentioned in this datasheet are no longer being manufactured and may not be ordered (OBS)

AC ELECTRICAL CHARACTERISTICS (See Figure 5).

Symbol	Parameter	Min.	Typ.	Max.	Unit	Conditions
AC Electrical Characteristics (See Figure 5)						
T_{21}	CSB to SCLK Setup Time	50			ns	
T_{22}	SCLK to CSB Hold Time	20			ns	
T_{23}	SDI to SCLK Setup Time	50			ns	
T_{24}	SCLK to SDI Hold Time	50			ns	
T_{25}	SCLK Low Time	240			ns	
T_{26}	SCLK High Time	240			ns	
T_{27}	SCLK Period	500			ns	
T_{28}	SCLK to CSB Hold Time	50			ns	
T_{29}	CSB Inactive Time	250			ns	
T_{30}	SCLK to SDO Valid			200	ns	
T_{31}	SCLK to SDOx Delay			100	ns	
T_{32}	SCLK Edge or CSB Edge to SDO H_Z		100		ns	
T_{33}	Rise/Fall Time SDO Output			40	ns	

Specifications are subject to change without notice

The product (or products) mentioned in this data sheet are no longer being manufactured and may not be ordered (OBS)

ABSOLUTE MAXIMUM RATINGS

Supply Range 7V

Voltage at Any Pin . . . . . GND0.3V to Vcc +0.3V

Operating Temperature . . . . . 40°C to +85°C

Storage Temperature . . . . . 40°C to +150°C

Package Dissipation 500mW

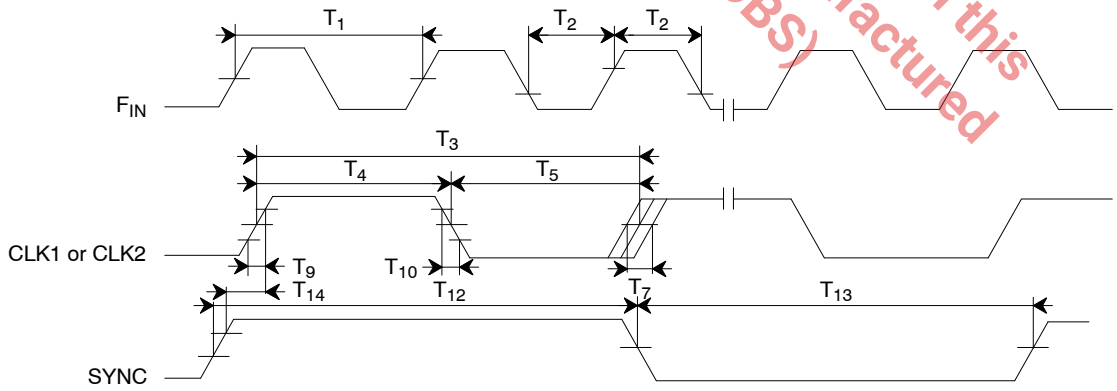

Figure 3. Clocks Timing

SYSTEM DESCRIPTION

On power up the clock outputs of XRT8000 will be tri-stated. This means that no clocks will be seen at the outputs and lock detect output will be low. After power up the XRT8000 needs to be initialized. Therefore a serial interface is provided to load the internal registers. These registers will define the modes of operation, the output frequencies and enabling the clock outputs.

Master/Forward Mode of Operation

When the XRT8000 device is operating in the "Master/Forward" Mode, it will receive either an "n x 2.048 MHz" or "n x 1.544 MHz" clock signal at the FIN input (pin3); where "n" can range from 1 to 16. From this input signal, the XRT8000 device will internally divide and synthesize the following signals.

At the CLK1 and/or CLK2 output pins:

- k x 56 kHz
- k x 64 kHz
- (k x 56 kHz)/8
- (k x 64 kHz)/8

where k can range from 1 to 32.

At the SYNC Output pin:

- 8kHz

The user selects and configures the XRT8000 device to generate these clock frequencies by writing the appropriate values into the Command Registers (CR1, CR2, CR3, CR4 and CR5), via the Microprocessor Serial Interface.

Reverse Mode of Operation

When the XRT8000 device is operating in the "Reverse" Mode, it will receive either a 56 kHz or 64 kHz clock signal at the FIN input. From this input signal, the XRT8000 device will synthesize any of the following clock signal frequencies.

At the CLK1 and/or CLK2 output pins:

- 1.544 MHz
- 2.048 MHz
- 1.544 MHz/8 = 193 kHz
- 2.048 MHz/8 = 256 kHz

At the SYNC output pin:

- 8 kHz

The user can configure the XRT8000 device to generate these clock frequencies by writing the appropriate values into the Command Registers (CR1, CR2, CR3, CR4 and CR5), via the Microprocessor Serial Interface.

Note: in the REVERSE mode the contents of CR3 and CR4 has to be all one's.

Slave (Forward, Reverse) Mode of Operation

To activate the slave modes of operations the input MSB must be tied low. In these modes an 8kHz signal must be applied to the FIN input in order to obtain output frequencies at T1 or E1 rates. The output frequencies can be selected via the serial interface in a similar fashion as described in the master forward and reverse modes.

The Lock Detect Output Pin

If both PLL's are enabled and in locked state then LOCKDET will be active. If one PLL loses lock then LOCKDET will be false. If only one PLL is enabled then only the active PLL will control the state of LOCKDET.

the product (or products) mentioned in this data sheet are no longer being manufactured and may not be ordered (OBS)

The Command Registers

Between the MSB input pin and the Command Registers, the user can configure the XRT8000 device into any of the operating modes that have been described in this data sheet. The user can access these Command Registers via the Microprocessor Serial Interface.

Table 1 presents the Address Location and Format for each of the Command Registers, within the XRT8000 device.

AD2~0	Register	D4	D3	D2	D1	D0
000	CR1	IOC4	IOC3	IOC2	IOC1	PL1EN
001	CR2	M4	M3	M2	M1	PL2EN
010	CR3	SEL14	SEL13	SEL12	SEL11	SEL10
011	CR4	SEL24	SEL23	SEL22	SEL21	SEL10
100	CR5	SYNCEN	CLK1EN	CLK2EN	PL2/8	PL1/8
101	CR6	Reserved	Reserved	Reserved	Reserved	Reserved
110	CR7	Reserved	Reserved	Reserved	Reserved	Reserved
111	CR8	Reserved	Reserved	Reserved	Reserved	Reserved

Table 1. Control Registers

The next few pages describe the role/functionality of each bit-field within the Command Registers.

The product (or products) mentioned in this data sheet are no longer being manufactured and may not be ordered (OBS)

CR1 Register (Power On State = "00000")

D0 (PL1EN):

Enable control for PLL1. If PL1EN = "1", then PLL1 is enabled. Otherwise, if PL1EN = "0", then PLL1 is disabled.

D1~D4 (IOC1~IOC4):

These four bit-fields function as the control bits for PLL1 and PLL2 operation modes. These bits select FORWARD, REVERSE, DATA, Kx56 or Kx64 clock rates. Multiplier "K" in Kx56 and Kx64 refers to harmonics of 56kHz or 64kHz clocks, this notation is extended to 1,544kHz and 2,048kHz frequencies in the following table (Table 2).

Note: *The value of "K" for PLL1 and PLL2 are independent of each other.*

Table 2

Table 2 creates the values of D1 through D4 within the CRI command register to the operating mode of the XRT8000 device.

The product (or products) mentioned in this data sheet are no longer being manufactured and may not be ordered (OBS)

IOC4	IOC3	IOC2	IOC1	Input Freq. [kHz]	PLL1 Output [kHz]	PLL2 Output [kHz]	Mode
0	0	0	0	nx1544	Kx56	Kx56	Forward
0	0	0	1	nx1544	Kx56	Kx64	Forward
0	0	1	0	nx1544	Kx64	Kx64	Forward
0	0	1	1	nx1544	Kx56	DATA	Forward
0	1	0	0	nx1544	Kx64	DATA	Forward
0	1	0	1	nx1544	DATA	DATA	Forward
0	1	1	0	56	1544	1544	Reverse
0	1	1	1	8K	1544	2048	Reverse
1	0	0	0	nx2048	Kx56	Kx56	Forward
1	0	0	1	nx2048	Kx56	Kx64	Forward
1	0	1	0	nx2048	Kx64	Kx64	Forward
1	0	1	1	nx2048	Kx56	DATA	Forward
1	1	0	0	nx2048	Kx64	DATA	Forward
1	1	0	1	nx2048	DATA	DATA	Forward
1	1	1	0	8	1544	2048	Reverse
1	1	1	1	64	2048	2048	Reverse

Table 2. Operation Mode/Output Clock Frequency Select Options Via the D1 Through D4 Bits within the CRI Register

Note:

1 *The values of "n" are selected via the M1 through M4 bits, within the CR2 Register (see Table 3).*

2 *The values of "k" are selected via the Sel14 through SelP bits within the CR3 Register (see Table 4).*

CR2 Register (Power On State = "00000")

D0 (PL2EN):

Enable control for PLL2. If PL2EN = "1", then PLL2 is enabled. Otherwise, if PL2EN = "0", PLL2 is disabled.

D1~D4 (M1~M4):

Control bits for prescaler divider. These bits will set the divide ratio of the prescaler such that in MASTER/ FORWARD or REVERSE modes the output of this block is always at 8kHz. The settings for M4~M1 bits is based on the input frequency and the mode of operation (which is determined by the state of IOC4~IOC1 bits) is provided in Table 3.

The product (or products) mentioned in this data sheet are no longer being manufactured and may not be ordered (OBS).

M4	M3	M2	M1	Mode	Input Freq.[kHz]
0	0	0	0	Forward	1x(1544 or 2048)
0	0	0	1	Forward	2x(1544 or 2048)
0	0	1	0	Forward	3x(1544 or 2048)
0	0	1	1	Forward	4x(1544 or 2048)
0	1	0	0	Forward	5x(1544 or 2048)
0	1	0	1	Forward	6x(1544 or 2048)
0	1	1	0	Forward	7x(1544 or 2048)
0	1	1	1	Forward	8x(1544 or 2048)
1	0	0	0	Forward	9x(1544 or 2048)
1	0	0	1	Forward	10x(1544 or 2048)
1	0	1	0	Forward	11x(1544 or 2048)
1	0	1	1	Forward	12x(1544 or 2048)
1	1	0	0	Forward	13x(1544 or 2048)
1	1	0	1	Forward	14x(1544 or 2048)
1	1	1	0	Forward	15x(1544 or 2048)
1	1	1	1	Forward	16x(1544 or 2048)
x	x	x	x	Reverse	56
x	x	x	x	Reverse	64

***Note**:*
This table applies to MASTER (FORWARD, REVERSE) mode only

Table 3. CR2 Register

CR3 Register (Power On State = "00000")

SEL14~SEL10:

These bits control two parameters:

1.) The frequency multiplier "K" for the PLL1, after selecting Kx56, Kx64 or DATA mode through register CR1 (1 < K < 32), and

2.) The delay time between the rising edge of the sync output signal (Pin 2) and the rising edge of the CLK1 or CLI 2 output signals (See Table 6).

Table 4 provides the settings for SEL14~10 bits to generate harmonic of 56kHz, 64kHz or 1.2kHz at the output of PLL1.

	PLL1 Output Frequency (kHz)			
SEL14~SEL10	**K factor**	**Kx56 MODE**	**Kx64 MODE**	**DATA MODE**
00000	1	56	64	1.2
00001	2	112	128	2.4
00010	3	168	192	4.8
00011	4	224	256	7.2
00100	5	280	320	9.6
00101	6	336	384	12
00110	7	392	448	14.4
00111	8	448	512	16.8
01000	9	504	576	19.2
01001	10	560	640	21.6
01010	11	616	704	24
01011	12	672	768	26.4
01100	13	728	832	28.8
01101	14	784	896	31.2
01110	15	840	960	33.6
01111	16	896	1024	36
10000	17	952	1088	38.4
10001	18	1008	1152	40.8
10010	19	1064	1216	43.2
10011	20	1120	1280	43.2
10100	21	1176	1344	43.2
10101	22	1232	1408	43.2
10110	23	1288	1472	43.2
10111	24	1344	1536	43.2
11000	25	1400	1600	43.2
11001	26	1456	1664	43.2
11010	27	1512	1728	43.2
11011	28	1568	1792	43.2
11100	29	1624	1856	43.2
11101	30	1680	1920	43.2
11110	31	1736	1984	43.2
11111	32	1792	2048	43.2

The product (or products) mentioned in this data sheet are no longer being manufactured and may not be ordered (OBS).

Note:
This table applies to forward or slave modes only

Table 4. CR3 Register

CR4 Register (Power On State = "00000")

SEL24~SEL20:

These bits control the frequency multiplier "K" for the PLL2, after selecting Kx56, Kx64 or DATA mode through register CR1 (1 < K < 32).

Table 5 provides the settings for SEL24~20 bits to generate harmonic of 56kHz, 64kHz or 1.2kHz at the output of PLL2.

	PLL2 Output Frequency (kHz)			
SEL24~SEL20	**K factor**	**Kx56 MODE**	**Kx64 MODE**	**DATA MODE**
00000	1	56	64	1.2
00001	2	112	128	2.4
00010	3	168	192	4.8
00011	4	224	256	7.2
00100	5	280	320	9.6
00101	6	336	384	12
00110	7	392	448	14.4
00111	8	448	512	16.8
01000	9	504	576	19.2
01001	10	560	640	21.6
01010	11	616	704	24
01011	12	672	768	26.4
01100	13	728	832	28.8
01101	14	784	896	31.2
01110	15	840	960	33.6
01111	16	896	1024	36
10000	17	952	1088	38.4
10001	18	1008	1152	40.8
10010	19	1064	1216	43.2
10011	20	1120	1280	43.2
10100	21	1176	1344	43.2
10101	22	1232	1408	43.2
10110	23	1288	1472	43.2
10111	24	1344	1536	43.2
11000	25	1400	1600	43.2
11001	26	1456	1664	43.2
11010	27	1512	1728	43.2
11011	28	1568	1792	43.2
11100	29	1624	1856	43.2
11101	30	1680	1920	43.2
11110	31	1736	1984	43.2
11111	32	1792	2048	43.2

***Note**:*
This table applies to forward or slave forward mode only

Table 5. CR4 Register

The product (or products) mentioned in this data sheet are no longer being manufactured and may not be ordered (Obs)

Table 6 presents information on the delay between the rising edge of SYNC and the CLK1 or CLKL output signals. It is important to note that this delay behaves as a function of the settings within the CR3 register.

		T values (nS)	
SEL14~SEL10	**K**	**Kx56 MODE**	**Kx64 MODE**
00000	1	372	326
00001	2	372	326
00010	3	372	326
00011	4	372	326
00100	5	446	391
00101	6	372	326
00110	7	319	279
00111	8	279	244
01000	9	496	434
01001	10	446	301
01010	11	406	355
01011	12	372	326
01100	13	343	301
01101	14	319	279
01110	15	298	260
01111	16	279	244
10000	17	525	460
10001	18	496	434
10010	19	470	411
10011	20	446	391
10100	21	425	372
10101	22	406	355
10110	23	388	340
10111	24	372	326
11000	25	357	312
11001	26	343	301
11010	27	331	289
11011	28	319	279
11100	29	308	279
11101	30	298	260
11110	31	288	252
11111	32	279	244

The product(or products) mentioned in this data sheet are no longer being manufactured and may not be ordered (OBS).

Notes:

[1] This table does not apply to the data mode or to Kx56 mode with the divide by eight enabled.

[2] This table does not apply when the XRT8000 device is operating in the REVERSE Mode.

Table 6. Delay Time Between SYNC and CLK1 or CLK2

CR5 Register (Power On State = "00000")

D0 : (PL1/8) :

Select the divider by 8 for PLL1,
PL1/8 = "1" CLK1 output frequency is divided by 8.
PL1/8 = "0" CLK1 output frequency is as per table 4.

D1 : (PL2/8) :

Select the divider by 8 for PLL2,
PL2/8 = "1" CLK2 output frequency is divided by 8.
PL2/8 = "0" CLK2 output frequency is as per table 5.

D2 : (CLK2EN) , PLL2:

Output enable bit,
CLK2EN = "1" CLK2 output is enabled.
CLK2EN = "0" CLK2 output is Tri State D.

D3 : (CLK1EN) , PLL1:

Output enable bit,
CLK1EN = "1" CLK1 output is enabled.
CLK1EN = "0" CLK1 output is Tri State D.

D4 : (SYNCEN) , 8kHz SYNC enable bit:

SYNCEN = "1" SYNC output is enabled.
SYNCEN = "0" SYNC output is Tri State D.

CR6 to CR7 Register

Register reserved for future use.

The Product (or products) mentioned in this data sheet are no longer being manufactured and may not be ordered (OBS)

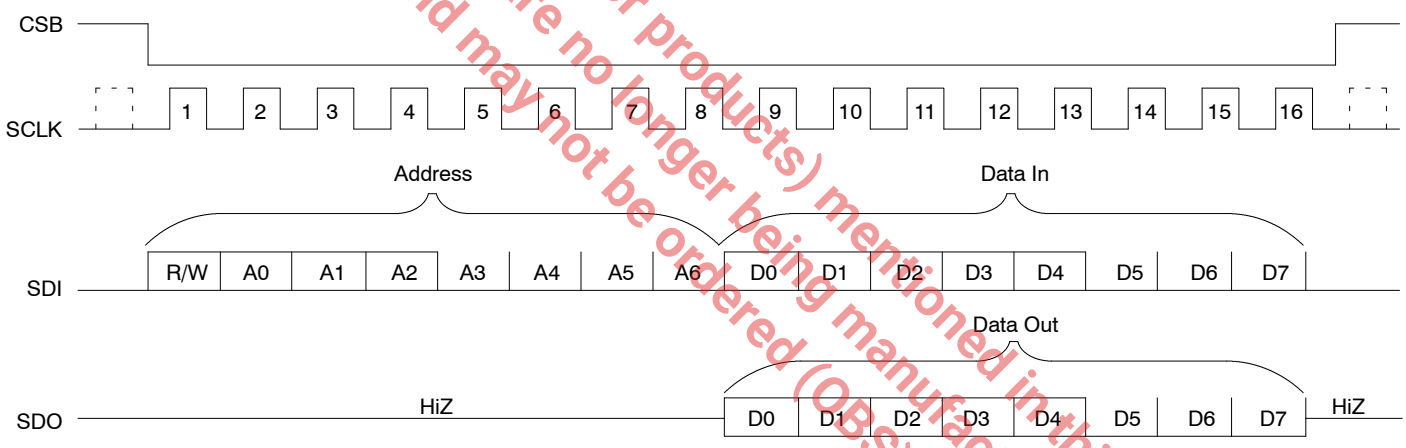

Figure 4. Serial Processor Interface Data Structure

Note:
A3, A4 and A5 always Low.
A6 Do not care.
R/W bit = 1 for a read operation
2 for a write operation
D5, D6 and D7 always Low

SERIAL INTERFACE

The serial interface is a simple four wire interface that is compatible with many of the microcontrollers available in the market. This interface consists of the following signals:

CSB	Chip Select (Active Low)
SCLK	Serial Clock Input
SDI	Serial Data Input
SDO	Serial Data Output

Using the Serial Interface

The following instructions, for using the serial interface, are best understood by referring to the diagram in *Figure 4.*

In order to use the serial interface the user must first provide a clock signal to the SCLK input pin. Afterwards, the user will initiates a “Read” or “Write” operation by asserting the active low Chip Select Input pin (CSB). It is important to note that the user assert CSB low coincident with the falling edge of SCLK.

Once the CSB input has been asserted the type of operation and the target register address must be provided by the user. The user will provide this information to the serial interface by writing four serial bits of data to the SDI input. Note: Each of these bits will be “clocked” into the SDI input, on the rising edge of SCLK. These four bits are identified and described below.

Bit 1: The R/W (Read/Write) Bit

This bit will be clocked into the SDI input, on the first rising edge of SCLK (after CSB has been asserted). This bit indicates whether the current operation is a read or a write operation. A “1” in this bit will cause a “Read” operation; whereas a “0” in this bit will cause a “Write” operation.

Bits 2 through 4: The three (3) bit address value (A0, A1, A2)

These next three rising edges of the SCLK signal will clock in the 3-bit address value for this particular read (or write) operation. This address selects the command register within XRT8000 device that the user will either be reading data from, or writing data to. The user must supply the address bits to the SDI input pin, in ascending order with the LSB first. (A3 to A5 must be low A6 is a “don’t care”).

Once the “Read/Write” and Address bits have been written, the subsequent action depends upon whether the current operation is a “Read” or “Write” operation.

Read Operation

Once the last address bit (A2) has been clocked into the SDI input, the read operation will proceed through an idle period, lasting four SCLK periods. On the falling edge of SCLK Cycle “8” (See Figure 4) the serial output signal (SDO) becomes active. At this point the user can begin reading the data contents of the addressed command register (at Address A2, A1, A0) via the SDO pin. The SDO pin will output this five bit data word (D0 through D4) in ascending order, with the LSB first, on the rising edges of the SCLK pin.

Write Operation

Once the last address bit (A2) has been clocked into the SDI input, the write operation will proceed through an idle period, lasting four SCLK periods. Prior to the rising edge of SCLK Cycle #9 (See Figure 4) the user must begin to apply the eight-bit data word, that he/she wishes to write to the serial input interface onto the SDI input pin. The microprocessor serial interface will catch the value on the SDI pin on the rising edge of the SCLK. The user must apply this word (D0 through D7), serially, in ascending order with the LSB first.

Simplified Interface Option

The user can simplify the design of the circuitry connecting to the serial interface by tying both the SDO and SDI pins together, and reading data from and/or writing data to this “combined” signal. This simplification is possible because only one of these signals are active at any given time. The inactive signal will be tri-stated.

Notes:

1. *Prior to reading data from (or writing data to) the Serial Interface, the user is not required to provide a clock signal at the SCLK. However, shortly before performing any read or write operations with the Serial Interface, the user must supply the clock signal to the SCLK input pin.*
2. *Each Read or Write operation, with the Serial Interface, will require 16 SCLK periods, as depicted in Figure 4.*
3. *Upon completion of a Read or Write cycle, the user must negate CSB for at least 250ns (see timing parameter T29 in the AC Characteristics), before asserting it again for the next Read or Write operation.*

The Product (or products) mentioned in this data sheet are no longer being manufactured and may not be ordered (OBS)

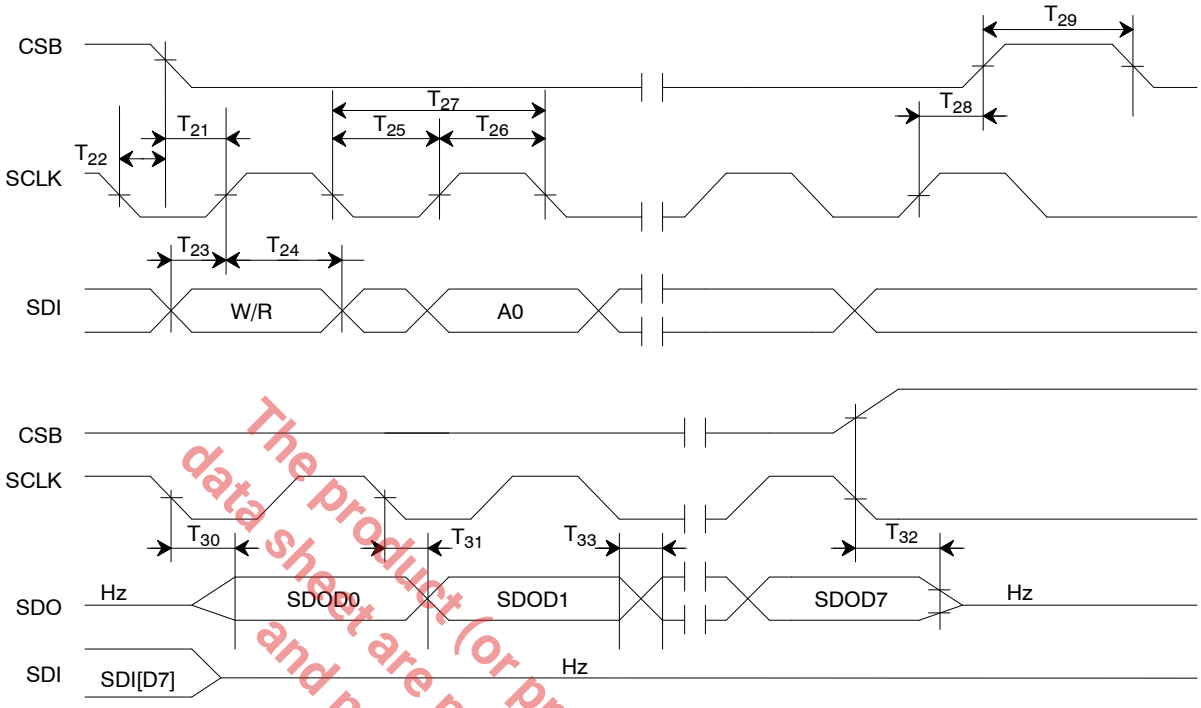

Figure 5. Serial Interface Timing

The product (or products) mentioned in this data sheet are no longer being manufactured and may not be ordered (OBS)

CONFIGURATION DIAGRAMS

The following six figures depict all of the configuration possibilities for the XRT8000. The table in the left (F_{IN}) lists different possibilities for reference clock input, while the table in the right lists all the possibilities for two output clocks.

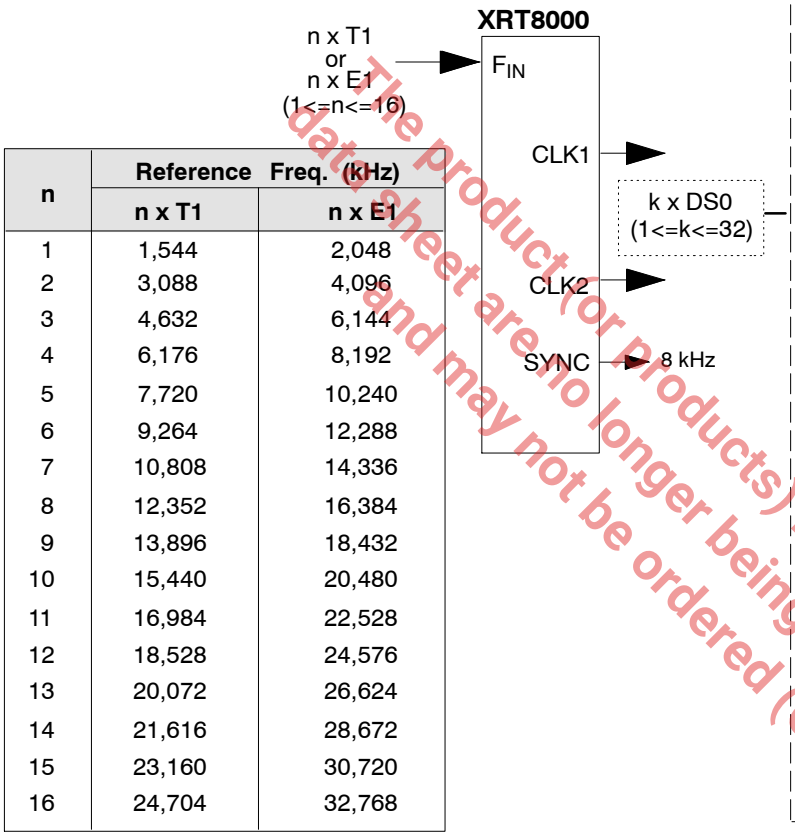

n	Reference Freq. (kHz)	
	n x T1	n x E1
1	1,544	2,048
2	3,088	4,096
3	4,632	6,144
4	6,176	8,192
5	7,720	10,240
6	9,264	12,288
7	10,808	14,336
8	12,352	16,384
9	13,896	18,432
10	15,440	20,480
11	16,984	22,528
12	18,528	24,576
13	20,072	26,624
14	21,616	28,672
15	23,160	30,720
16	24,704	32,768

1	56	7	64	8
2	112	14	128	16
3	168	21	192	24
4	224	28	256	32
5	280	35	320	40
6	336	42	384	48
7	392	49	448	56
8	448	56	512	64
9	504	63	576	72
10	560	70	640	80
11	616	77	704	88
12	672	84	768	96
13	728	91	832	104
14	784	98	896	112
15	840	105	960	120
16	896	112	1,024	128
17	952	119	1,088	136
18	1,008	126	1,152	144
19	1,064	133	1,216	152
20	1,120	140	1,280	160
21	1,176	147	1,344	168
22	1,232	154	1,408	176
23	1,288	161	1,472	184
24	1,344	168	1,536	192
25	1,400	175	1,600	200
26	1,456	182	1,664	208
27	1,512	189	1,728	216
28	1,568	196	1,792	224
29	1,624	203	1,856	232
30	1,680	210	1,920	240
31	1,736	217	1,984	248
32	1,792	224	2,048	256

The product(or products) mentioned in this data sheet are no longer being manufactured and may not be ordered (OBS)

Figure 6. Master Forward Mode

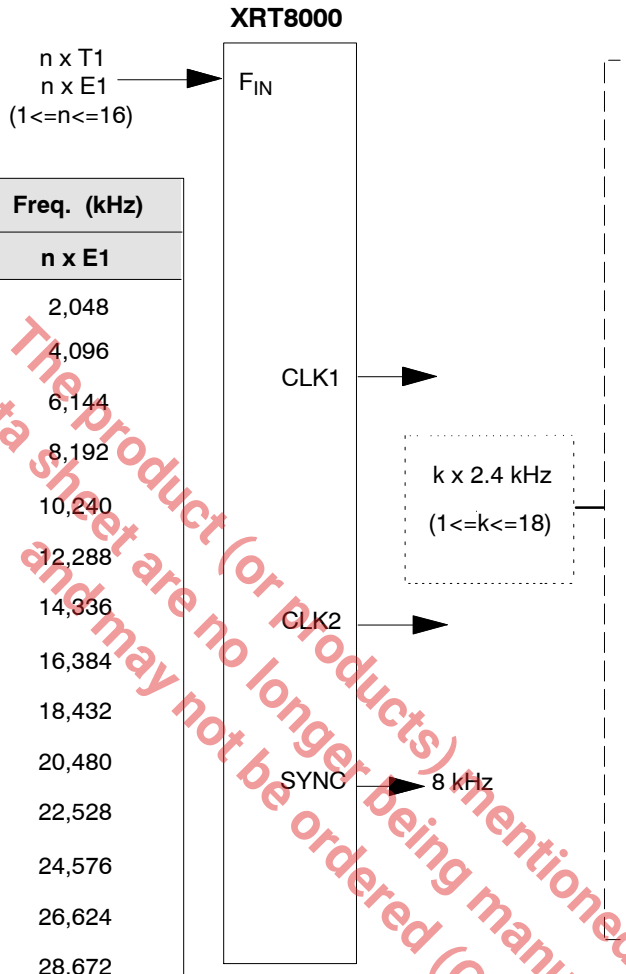

n	Reference Freq. (kHz)	
	n x T1	n x E1
1	1,544	2,048
2	3,088	4,096
3	4,632	6,144
4	6,176	8,192
5	7,720	10,240
6	9,264	12,288
7	10,808	14,336
8	12,352	16,384
9	13,896	18,432
10	15,440	20,480
11	16,984	22,528
12	18,528	24,576
13	20,072	26,624
14	21,616	28,672
15	23,160	30,720
16	24,704	32,768

k	Output Frequencies (Hz)	
	(k x 2400)	(k x 2400)/8
0.5	1,200	150
1	2,400	300
2	4,800	600
3	7,200	900
4	9,600	1,200
5	12,000	1,500
6	14,400	1,800
7	16,800	2,100
8	19,200	2,400
9	21,600	2,700
10	24,000	3,000
11	26,400	3,300
12	28,800	3,600
13	31,200	3,900
14	33,600	4,200
15	36,000	4,500
16	38,400	4,800
17	40,800	5,100
18	43,200	5,400

The product (or products) mentioned in this data sheet are no longer being manufactured and may not be ordered (OBS)

Figure 7. Master Forward Mode (Cont'd)

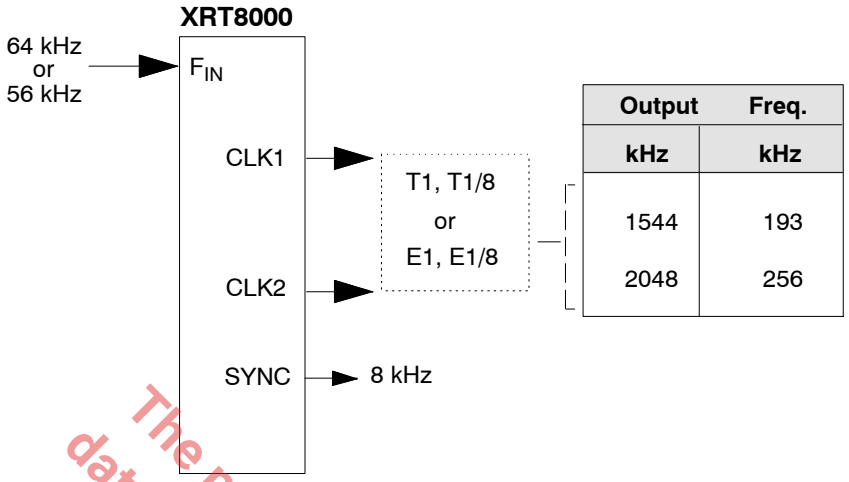

Output	Freq.
kHz	kHz
1544	193
2048	256

Figure 8. Master Reverse Mode

The product (or products) mentioned in this data sheet are no longer being manufactured and may not be ordered (OBS)

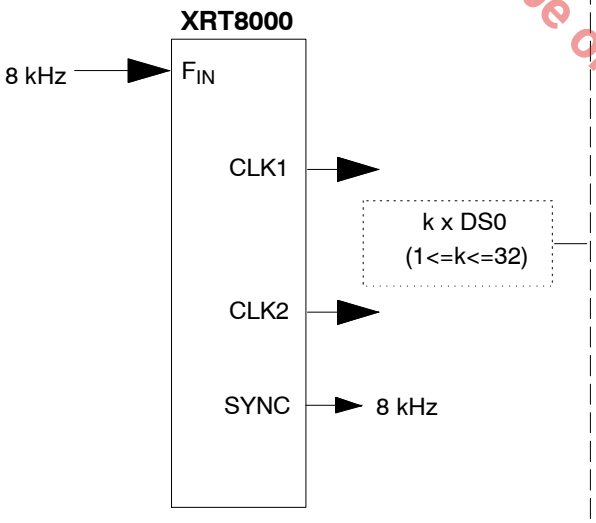

k	Output Frequencies (kHz)			
	(k x 56)/8	(k x 56)/8	(k x 64)	(k x 64)/8
1	56	7	64	8
2	112	14	128	16
3	168	21	192	24
4	224	28	256	32
5	280	35	320	40
6	336	42	384	48
7	392	49	448	56
8	448	56	512	64
9	504	63	576	72
10	560	70	640	80
11	616	77	704	88
12	672	84	768	96
13	728	91	832	104
14	784	98	896	112
15	840	105	960	120
16	896	112	1,024	128
17	952	119	1,088	136
18	1,008	126	1,152	144
19	1,064	133	1,216	152
20	1,120	140	1,280	160
21	1,176	147	1,344	168
22	1,232	154	1,408	176
23	1,288	161	1,472	184
24	1,344	168	1,536	192
25	1,400	175	1,600	200
26	1,456	182	1,664	208
27	1,512	189	1,728	216
28	1,568	196	1,792	224
29	1,624	203	1,856	232
30	1,680	210	1,920	240
31	1,736	217	1,984	248
32	1,792	224	2,048	256

Figure 9. Slave Forward Mode

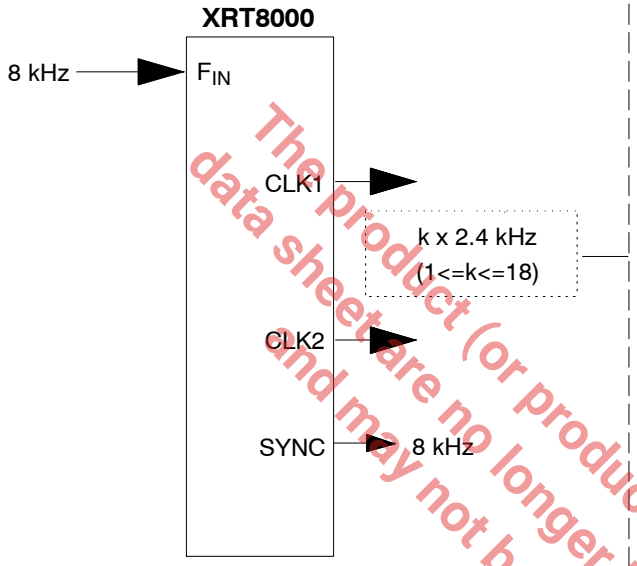

k	Output Frequencies (Hz)	
	(k x 2400)	(k x 2400)/8
0.50	1,200	150
1	2,400	300
2	4,800	600
3	7,200	900
4	9,600	1,200
5	12,000	1,500
6	14,400	1,800
7	16,800	2,100
8	19,200	2,400
9	21,600	2,700
10	24,000	3,000
11	26,400	3,300
12	28,800	3,600
13	31,200	3,900
14	33,600	4,200
15	36,000	4,500
16	38,400	4,800
17	40,800	5,100
18	43,200	5,400

Figure 10. Slave Forward Mode (Cont'd)

The product (or products) mentioned in this data sheet are no longer being manufactured and may not be ordered (OBS)

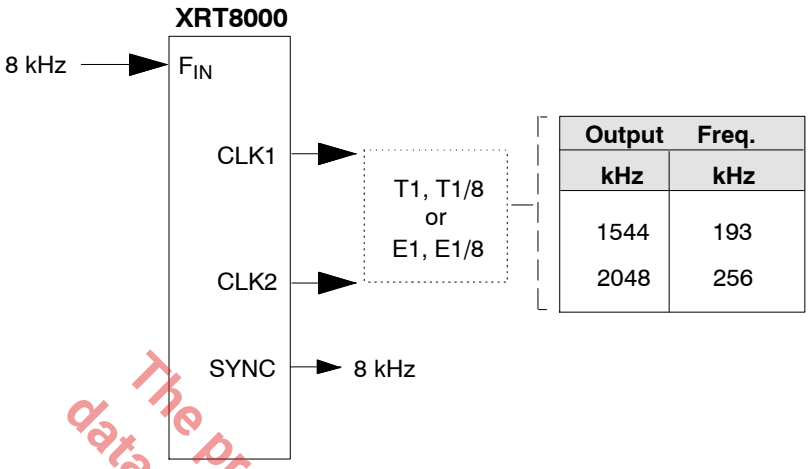

Figure 11. Slave Reverse Mode (Cont'd)

The product (or products) mentioned in this data sheet are no longer being manufactured and may not be ordered (OBS)

Board Layout Considerations

The CLK1 and CLK 2 outputs are surrounded with supply pins (GND(514),Vcc(712). It is recommended to decouple these supplies with a 0.1uF very close to the pins. The positive supply (7,12,15) and ground pins (4,5,14) can all be connected to the Digital Supply and Ground.

The internal VCO has its proper supply's pins (GND 9, Vcc 10) these supply pins have to be decoupled by a 0.1uF capacitor and should be connected to an Analog Supply if possible. If there is no Analog Supply, then connect these pins as close as possible to the supply source.

If the layout is done with separate layers for the supplies, cut an island under the XTT8000 such that no current flows under the circuit. It has been observed that coupling can occur because heavy digital currents are flowing under the locations of the XRT8000.

18 LEAD PLASTIC DUALINLINE (300 MIL PDIP)

Rev. 1.00

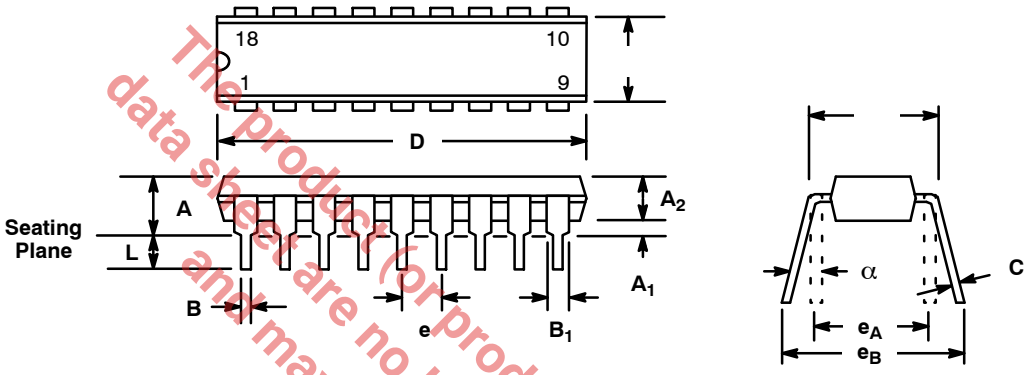

The product (or products) mentioned in this data sheet are no longer being manufactured and may not be ordered (OBS)

SYMBOL	INCHES MIN	INCHES MAX	MILLIMETERS MIN	MILLIMETERS MAX
A	0.145	0.210	3.68	5.33
A_1	0.015	0.070	0.38	1.78
A2	0.115	0.195	2.92	4.95
B	0.014	0.024	0.36	0.56
B_1	0.030	0.070	0.76	1.78
C	0.008	0.014	0.20	0.38
D	0.845	0.925	21.46	23.50
E	0.300	0.325	7.62	8.26
E_1	0.240	0.280	6.10	7.11
e	0.100 BSC		2.54 BSC	
e_A	0.300 BSC		7.62 BSC	
e_B	0.310	0.430	7.87	10.92
L	0.115	0.160	2.92	4.06
α	0°	15°	0°	15°

Note: *The control dimension is the inch column*

18 LEAD SMALL OUTLINE (300 MIL JEDEC SOIC)

Rev. 1.00

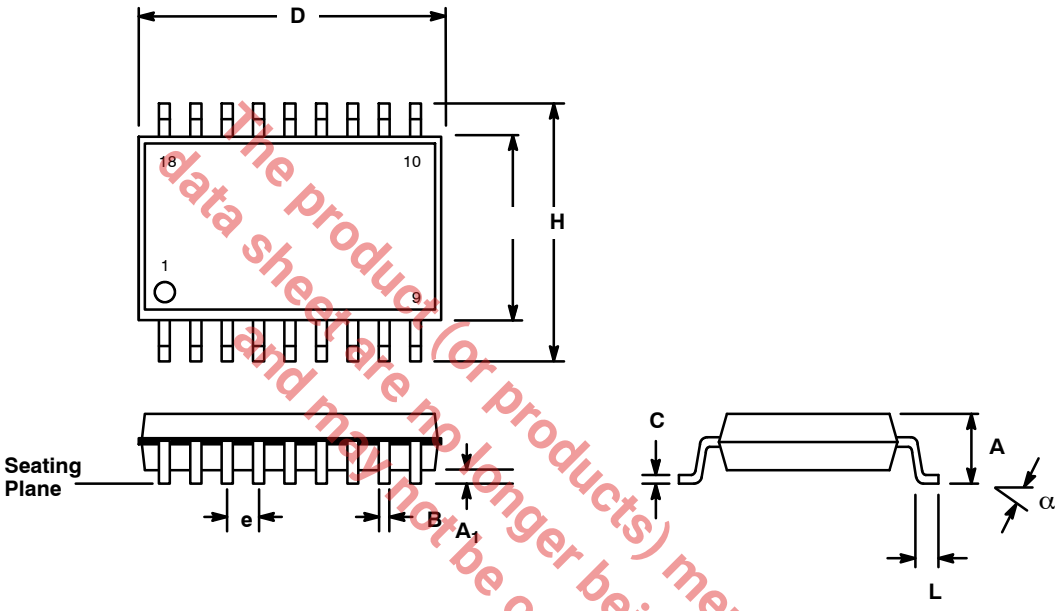

The product (or products) mentioned in this data sheet are no longer being manufactured and may not be ordered (OBS)

SYMBOL	INCHES		MILLIMETERS	
	MIN	MAX	MIN	MAX
A	0.093	0.104	2.35	2.65
A_1	0.004	0.012	0.10	0.30
B	0.013	0.020	0.33	0.51
C	0.009	0.013	0.23	0.32
D	0.447	0.463	11.35	11.75
E	0.291	0.299	7.40	7.60
e	0.050 BSC		1.27 BSC	
H	0.394	0.419	10.00	10.65
L	0.016	0.050	0.40	1.27
α	0°	8°	0°	8°

Note: *The control dimension is the millimeter column*

The product (or products) mentioned in this data sheet are no longer being manufactured and may not be ordered (OBS)

NOTICE

EXAR Corporation reserves the right to make changes to the products contained in this publication in order to improve design, performance or reliability. EXAR Corporation assumes no responsibility for the use of any circuits described herein, conveys no license under any patent or other right, and makes no representation that the circuits are free of patent infringement. Charts and schedules contained herein are only for illustration purposes and may vary depending upon a user's specific application. While the information in this publication has been carefully checked; no responsibility, however, is assumed for inaccuracies.

EXAR Corporation does not recommend the use of any of its products in life support applications where the failure or malfunction of the product can reasonably be expected to cause failure of the life support system or to significantly affect its safety or effectiveness. Products are not authorized for use in such applications unless EXAR Corporation receives, in writing, assurances to its satisfaction that: (a) the risk of injury or damage has been minimized; (b) the user assumes all such risks; (c) potential liability of EXAR Corporation is adequately protected under the circumstances.

Copyright 1999–2006 EXAR Corporation
Datasheet September 2006
Reproduction, in part or whole, without the prior written consent of EXAR Corporation is prohibited.