FOR-1755 Rev.1.3

Transfer or duplication of this document as well as the utilization or communication of its contents are prohibited unless explicit authorization is granted. Violations will be liable for compensation. All rights reserved for patent, utility model or designs registrations. 非给予明确授权，否则禁止转让、复制、利用、交流本文件的内容。侵犯者将负赔偿责任。本公司保留对涉及发明、实用新型和外观专利的所有权利。

未注公差/General tolerances(mm)

0 ~ 3	>3 ~ 6	>6 ~ 10	>10 ~ 18	>18 ~ 30	>30 ~ 50	>50 ~ 80	>80 ~ 120	>120 ~ 180	>180 ~ 250	>250 ~ 315	>315 ~ 400	>400 ~ 500	>500
±0.12	±0.18	±0.22	±0.26	±0.31	±0.37	±0.57	±0.80	±0.93	±1.05	±1.15	±1.60	±2.20	±2.50

0.1/10

±2°

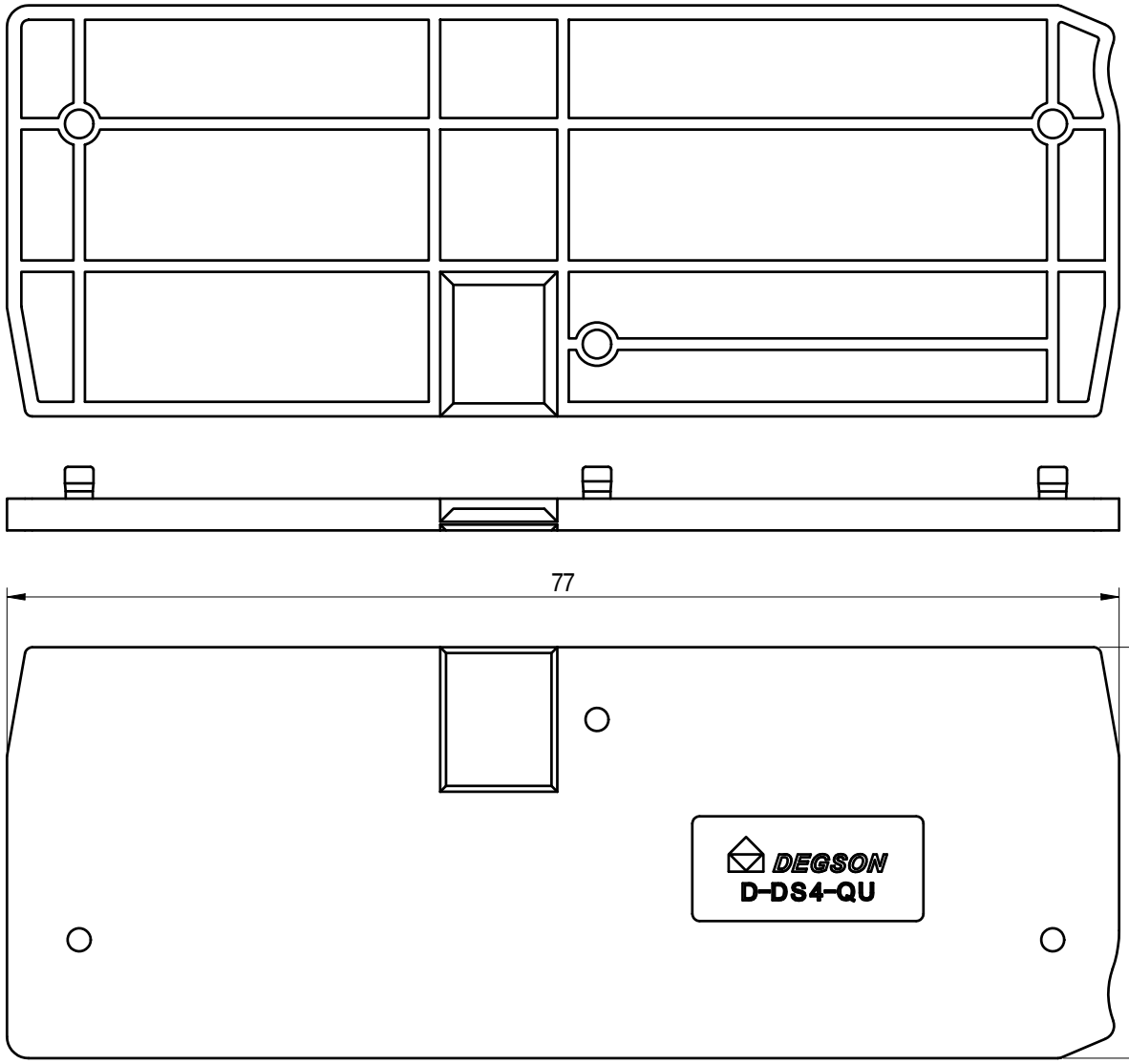

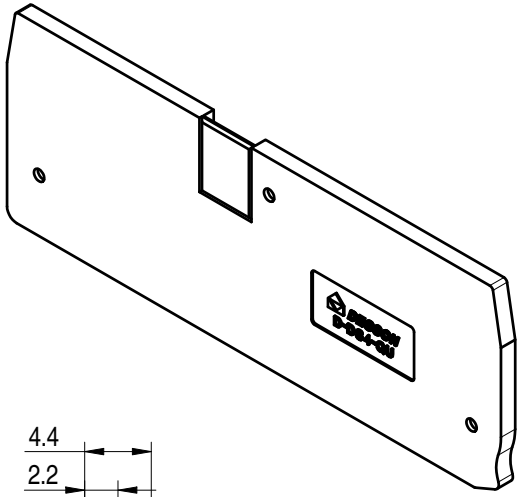

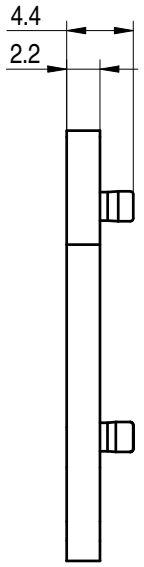

间距/ Pitch(mm)/ 线数范围/ Poles	2.2/ 01P
使用温度范围/ Operating temperature(℃)	- 40~+105
符合 RoHS环保要求/ Conform to RoHS	Yes
阻燃等级/ Flame class	UL94V- 0

DEGSON

APPD:	李根劳	2023.09.18
CHKD:	马恩开	2023.09.18
DRFT:	胡霭暾	2023.03.19

A4 mm (inch)

MATERIAL: PA66 SURFACE/COLOR:

MAT NO./REV: 11060001520-1 / 00 MAT STATUS: work

NAME: D-DS4-QU-01P-11-00L(H)

DRAWING NO.	TYPE	DRAWING STATUS	SCALE	SHEET
200006152	CUSTOMER DRAWING	work	2:1	1/1

REV	ECN	DESCRIPTION	DRFT	DATE
00		NEW DRAWING	胡霭暾	2023.09.18