DRAWING FOR REFERENCE: This is subject to change without notice
08/11/2012

HRS DRAWING FOR REFERENCE

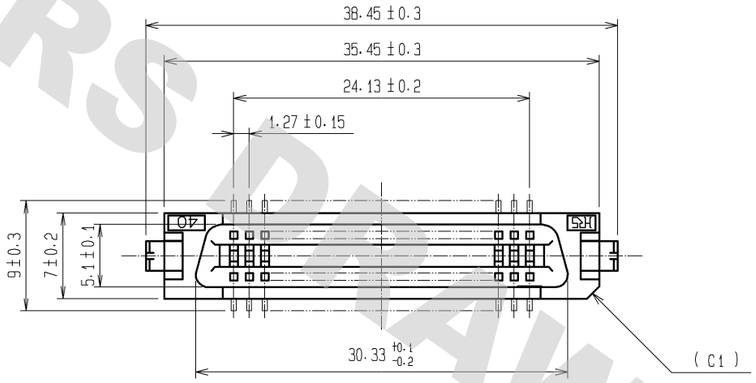

RECOMMENDED LAND PATTERN DIMENSION OF PCB (MOUNTING SIDE)
(RECOMMENDED METAL MASK THICKNESS:0.2mm)

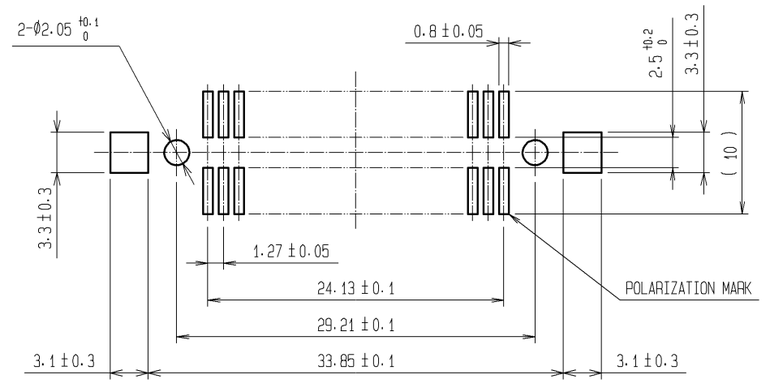

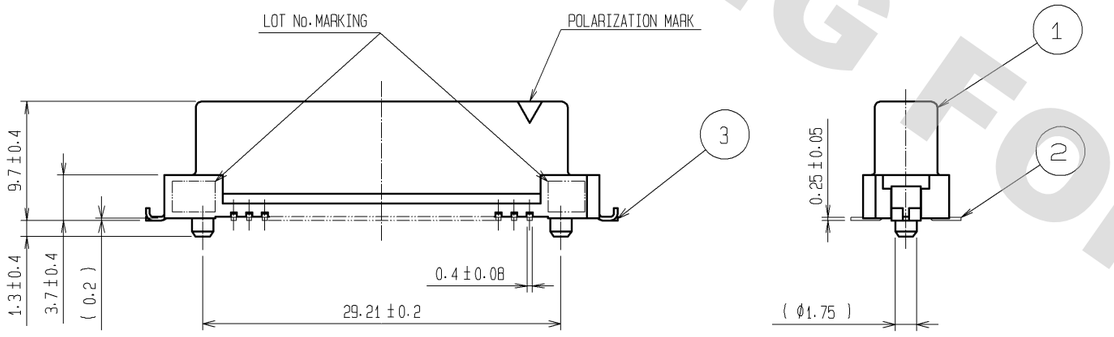

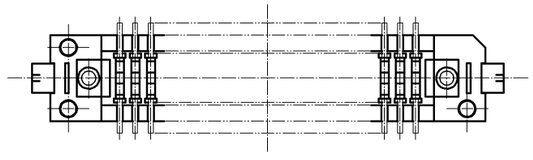

NOTE
1. LEAD CO-PLANARITY SHALL BE 0.15mm MAX.
2. EMBOSSED CARRIER TAPE PACKING SHALL BE APPLIED TO THIS PRODUCT. SEE NEXT PAGE FOR DETAILS.
3. THIS PRODUCT HAS TAPE FOR VACUUM PICKUP, SEE NEXT PAGE FOR DETAIL OF STICKING POSITION, ETC.
4. THE DIMENSIONS IN PARENTHESES ARE FOR REFERENCE.

NO.	MATERIAL	FINISH , REMARKS	NO.	MATERIAL	FINISH , REMARKS
2	PHOSPHOR BRONZE	CONTACT AREA:GOLD 0.2μm min.	6	PI	TAPE FOR VACUUM PICKUP
		LEAD AREA:TIN-PLATING 2μm min.	5	PE	TOP COVER TAPE
		UNDER PLATING:NICKEL 1.5μm min.	4	PS	EMBOSSED CARRIER TAPE
1	PPS	LIGHT BROWN (UL94V-0)	3	BRASS	TIN-PLATING

UNITS	SCALE	COUNT	DESCRIPTION OF REVISIONS	DESIGNED	CHECKED	DATE
mm	2 : 1	△				

HIROSE ELECTRIC CO., LTD.

APPROVED	HT. YAMAGUCHI	11.09.29
CHECKED	HT. YAMAGUCHI	11.09.29
DESIGNED	YJ. ASAO	11.09.29
DRAWN	YJ. ASAO	11.09.29

DRAWING NO.	EDC3-082415-22
PART NO.	FX2-40S-1.27SVL(99)
CODE NO.	CL572-2153-7-99

△ 1/2

DRAWING FOR REFERENCE: This is subject to change without notice
08/11/2012

HRS DRAWING FOR REFERENCE

DRAWING FOR PACKING (2:1)

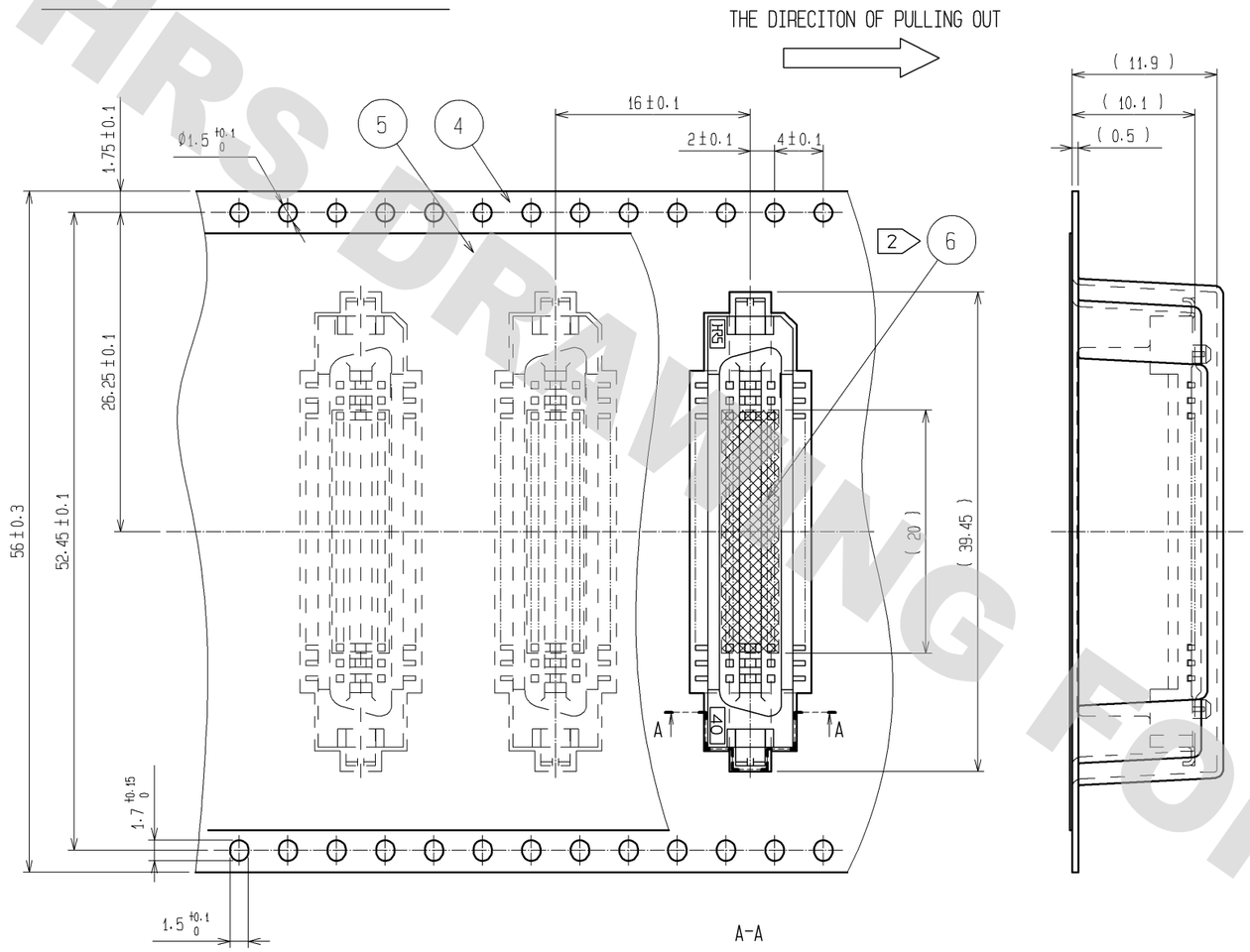

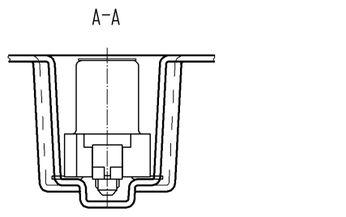

REELED DIMENSION(FREE)

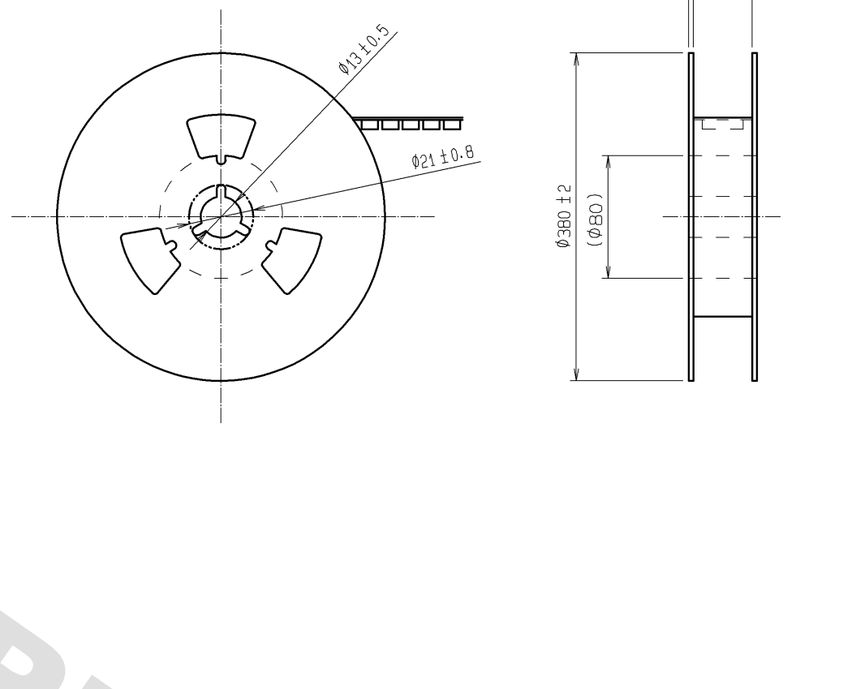

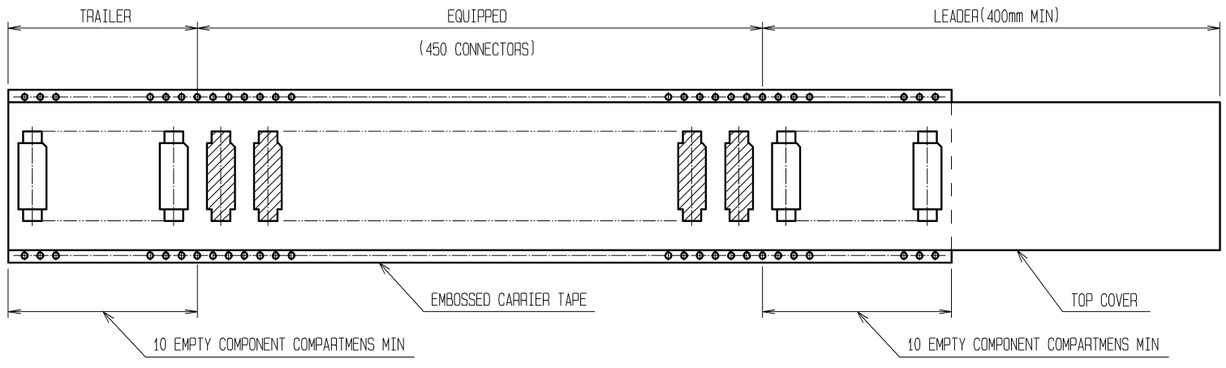

NOTE
1. 1 REEL:450 CONNECTORS
2. REMOVE THE VACUUM PICKUP TAPE AFTER MOUNTING THE CONNECTOR.
3. THE DIMENSIONS IN PARENTHESES ARE FOR REFERENCE.

HRS	DRAWING NO.	EDC3-082415-22
	PART NO.	FX2-40S-1.27SVL(99)
	CODE NO.	CL572-2153-7-99 △2 2/2