THIS DRAWING AND THE SUBJECT MATTER SHOWN THEREON ARE CONFIDENTIAL AND THE PROPERTY OF BEL/STEWART/TRP CONNECTOR AND SHALL NOT BE REPRODUCED, COPIED, OR USED IN ANY MANNER WITHOUT THE WRITTEN CONSENT OF TRP CONNECTOR.

PRODUCT MAY BE PROTECTED BY ONE OR MORE OF THE FOLLOWING US PATENTS:
5736910 5939955 6425781 6428361 6554638 6840817 7123117
7429195 7717749 7808751 6217391 6149050 7924130

REVISIONS

P	LTR	DESCRIPTION	DATE	DWN	APVD
	2	EC-1411035 COMPANY LOGO CHANGE	04JAN2015	DP	TY

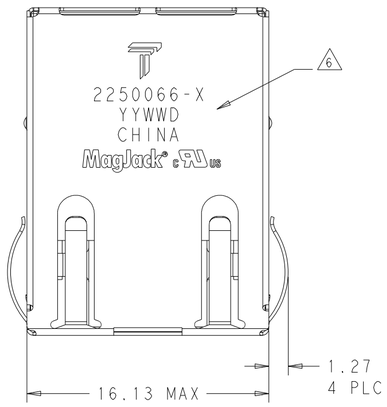

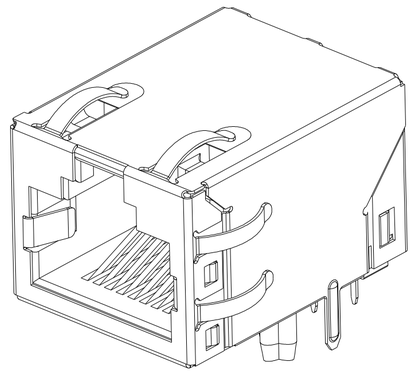

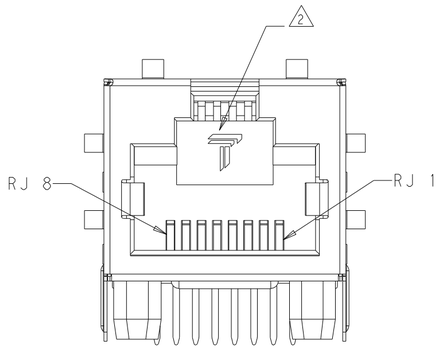

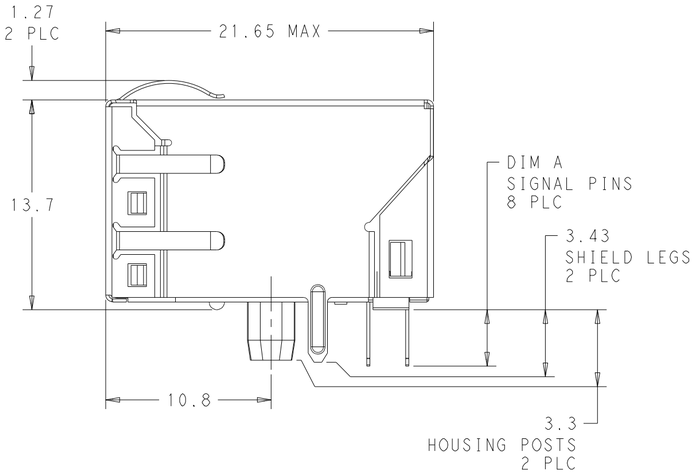

1. MATERIALS
   - HOUSING: THERMOPLASTIC, FLAMMABILITY RATING UL 94V-0.
   - SHIELD: BRASS 0.20mm THICK, PREPLATED WITH 0.76um MIN SEMI-BRIGHT NICKEL. SOLDER TABS POST DIPPED WITH 2.54um MIN SAC SOLDER.
   - CONTACTS: PHOSPHOR BRONZE 0.46mm X 0.30mm, PHOSPHOR BRONZE, 1.27um MIN NICKEL UNDERPLATE, WITH 1.27um MIN GOLD PLATING AT MATING INTERFACE AND 2.54um MIN MATTE TIN ON SOLDER TAILS, OR 1.27um MIN NICKEL UNDERPLATE, WITH 0.05um GOLD PLATING OVER 0.76um MIN PALLADIUM NICKEL PLATING AT MATING INTERFACE AND 2.54um MIN MATTE TIN ON SOLDER TAILS.
   - SOLDER TAILS: 0.25mmTHICK, PHOSPHOR BRONZE, 1.27um MIN OVERALL NICKEL UNDERPLATE, 3um TIN PLATE

△2 RJ45 JACK CAVITY CONFORMS TO FCC RULES AND REGULATIONS PART 68 SUB PART F.

△3 MAGNETICS
   -APPLICATION: 10/100 BASE-T, EXTENDED TEMPERATURE
   -IMPEDANCE: 100 OHMS
   -TURNS RATIO (CHIP:CABLE): TX = 1:1, RX = 1:1
   -OPEN CIRCUIT INDUCTANCE (OCL): 350uH MIN @100kHz, 0.1VRMS, 8mADC BIAS FROM -40°C TO +85°C, TX AND RX
   -PERFORMANCE @ 25°C:
   INSERTION LOSS (IL): 1.1dB MAX FROM 0.5MHz TO 100MHz
   RETURN LOSS (RL): 18dB MIN FROM 0.5MHz TO 30MHz
   18-20LOG(f/30)dB MIN FROM 30.1MHz TO 60MHz
   12dB MIN FROM 60.1MHz TO 80MHz
   CROSSTALK ATTENUATION: 35dB MIN FROM 0.5MHz TO 40MHz
   33-20LOG(f/50)dB MIN FROM 40.1MHz TO 100MHz
   COMMON MODE REJECTION RATIO (CMRR): 30dB MIN FROM 0.5MHz TO 100MHz
   - ISOLATION VOLTAGE: 2250VDC FOR 60 SECONDS WITH A RISE TIME OF 500 V/SEC

4. OPERATING TEMPERATURE: FROM -40°C TO +85°C.

△5 INDICATED MAGNETIC CONNECTIONS ARE SYMMETRICAL TO SUPPORT AUTO-MDI/MDIX.

△6 TRP CONNECTOR LOGO, PART NUMBER, DATE CODE, COUNTRY OF ORIGIN AND AGENCY APPROVAL MARKING IN APPROXIMATE LOCATION SHOWN. DATE CODE: YYWWD WHERE YY IS YEAR, WW IS WORK WEEK, D IS DAY OF WEEK, WITH SUNDAY=1.

7. PART SHOULD BE RECOMMENDED FOR WAVE SOLDERING PROCESS,PREHEAT TEMPERATURE IS 120°C TO 160°C, 120 SECONDS TO 180 SECONDS, PEAK WAVE SOLDERING TEMPERATURE IS 260°C MAX,10 SECONDS MAX.

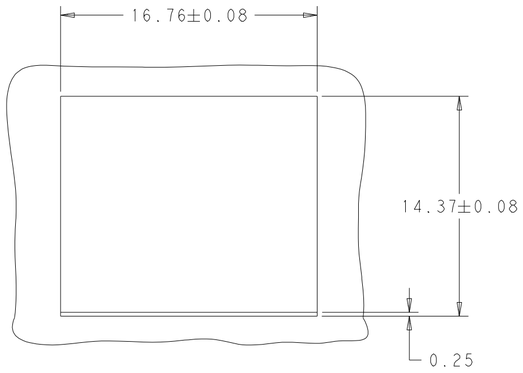

SUGGESTED PANEL CUTOUT

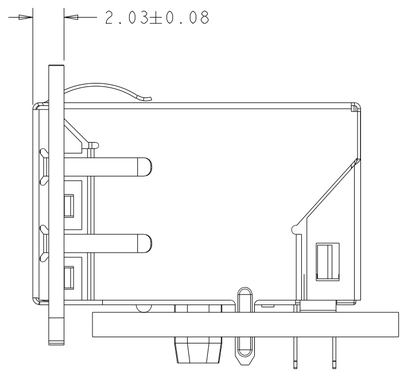

DIM A	PART NUMBER
3.18	2250066-2
3.68	2250066-1

THIS DRAWING IS A CONTROLLED DOCUMENT.

DIMENSIONS: mm

TOLERANCES UNLESS OTHERWISE SPECIFIED:
0 PLC ±0.25
1 PLC ±0.25
2 PLC ±0.25
3 PLC ±0.25
4 PLC ±
ANGLES ±

PRODUCT SPEC -

APPLICATION SPEC -

DWN ROY LIU 17DEC2013
CHK TOWER YU/ FRANK LIU 17DEC2013
APVD TONY YUAN 17DEC2013

trp CONNECTOR a bel group DONGGUAN CHINA

MODEL NAME: MAGJACK SINGLE NON-PoE

DESC: 1X1 726ET 10/100 TAB UP W/O LED
-

SIZE	CAGE CODE	DRAWING NO	RESTRICTED TO
A1		C-2250066	-

CUSTOMER DRAWING | SCALE 4:1 | SHEET 1 OF 3 | REV 2

*****

Please read our datasheet & drawing disclaimer here.

© COPYRIGHT TRP connector ALL RIGHTS RESERVED

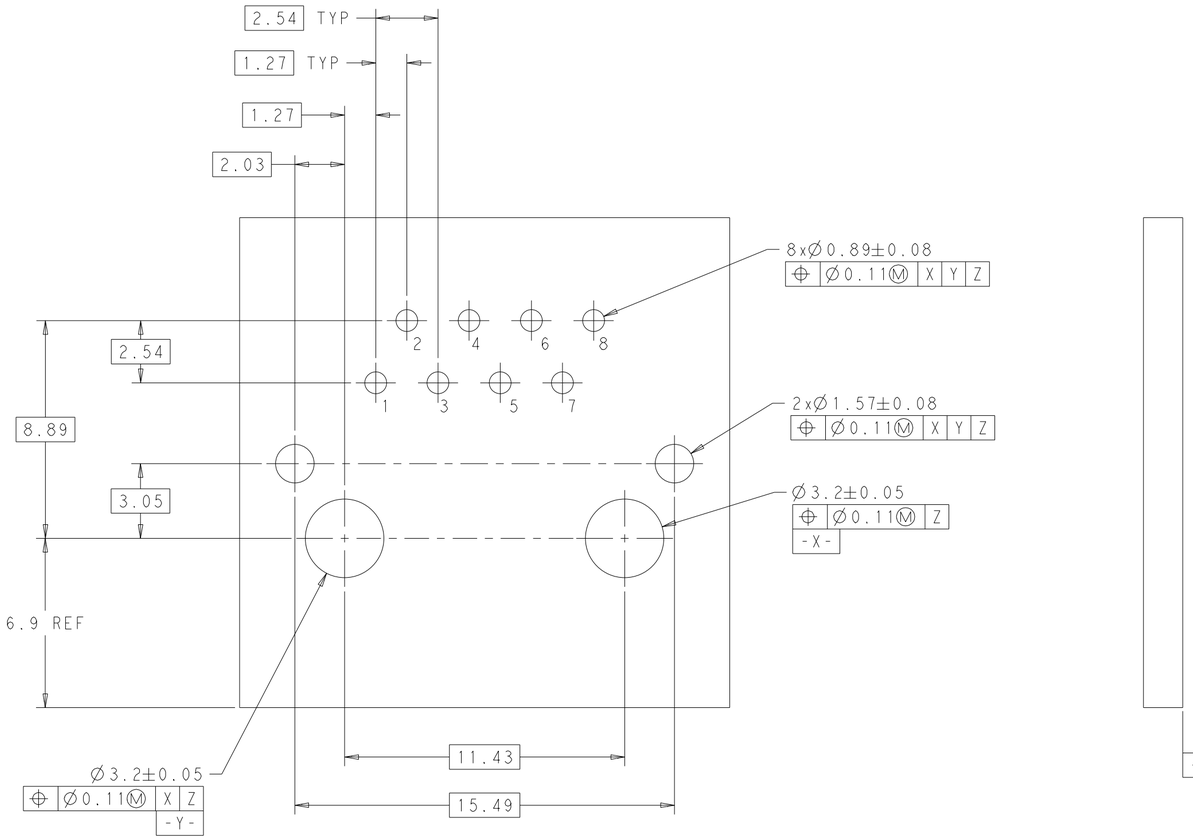

SUGGESTED PCB LAYOUT

726ET 10/100 CIRCUIT 3 5

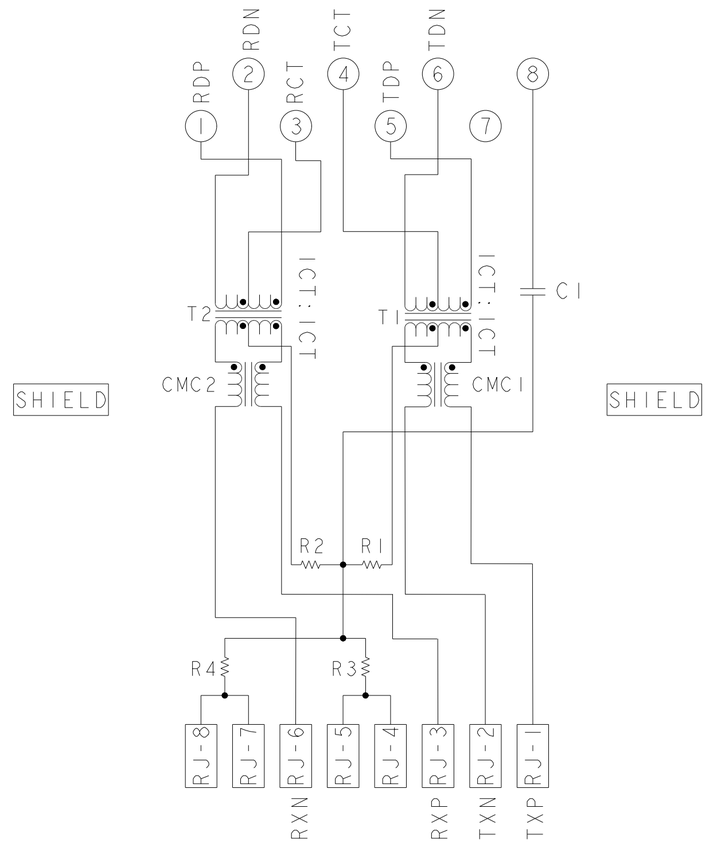

C1=1000pF, 2kV CAPACITOR
R1-R4 = 75 Ohms, 1/16 W RESISTORS

THIS DRAWING IS A CONTROLLED DOCUMENT.	DWN ROY LIU 17DEC2013	trp CONNECTOR a bel group	DONGGUAN CHINA
DIMENSIONS: mm	CHK TOWER YU/ FRANK LIU 17DEC2013		
TOLERANCES UNLESS OTHERWISE SPECIFIED: 0 PLC ±0.25, 1 PLC ±0.25, 2 PLC ±0.25, 3 PLC ±0.25, 4 PLC ±, ANGLES ±	APVD TONY YUAN 17DEC2013	MODEL NAME MAGJACK SINGLE NON-PoE	DESC 1X1 726ET 10/100 TAB UP W/O LED -
PRODUCT SPEC -	APPLICATION SPEC -	SIZE A1 / CAGE CODE / DRAWING NO C-2250066 / RESTRICTED TO -	
CUSTOMER DRAWING		SCALE 4:1 / SHEET 2 OF 3 / REV 2	

xxxxx

© COPYRIGHT TRP connector ALL RIGHTS RESERVED

C_2250066					STOCK DISPOSITION			
					A: CONTINUE AS IS B: REWORK C: SCRAP		D: USE OLD FIRST E: PARTS TO CONFORM F: OTHER	
REVISION HISTORY								
DATE	REV	CHANGES	REASON	APPROVAL	INVENTORY (A,B,C,D,E,F)	WORK IN PROCESS (A,B,C,F)	SUPPLIER ORDERS (A,E,F)	OPEN CUST ORDERS (A,E,F)
17DEC2013	1	-	INITIAL RELEASE	TONY YUAN	-	-	-	-
04JAN2015	2	EC-1411035 COMPANY LOGO CHANGE	MARKET REQUEST	TONY YUAN	-	-	-	-

THIS DRAWING IS A CONTROLLED DOCUMENT.

DIMENSIONS: mm

TOLERANCES UNLESS OTHERWISE SPECIFIED:

0 PLC	±0.25
1 PLC	±0.25
2 PLC	±0.25
3 PLC	±0.25
4 PLC	±
ANGLES	±

PRODUCT SPEC: -

APPLICATION SPEC: -

DWN ROY LIU 17DEC2013
CHK TOWER YU/ FRANK LIU 17DEC2013
APVD TONY YUAN 17DEC2013

MODEL NAME: MAGJACK SINGLE NON-PoE

trp CONNECTOR a bel group — DONGGUAN CHINA

DESC: IXI 726ET 10/100 TAB UP W/O LED -

SIZE	CAGE CODE	DRAWING NO	RESTRICTED TO
A1		C-2250066	-

CUSTOMER DRAWING | SCALE 4:1 | SHEET 3 OF 3 | REV 2

xxxxx