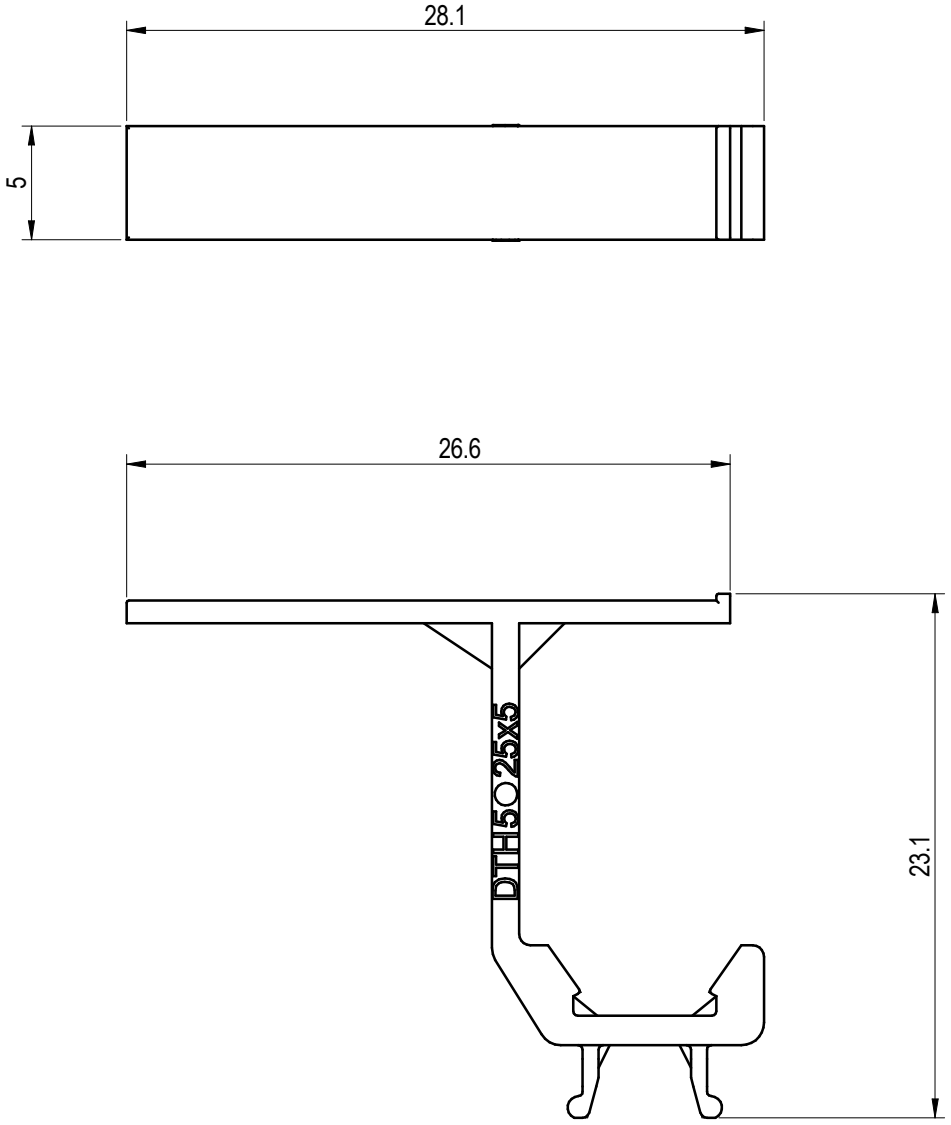

Please refer to the 3D model,
for these unmarked dimensions.

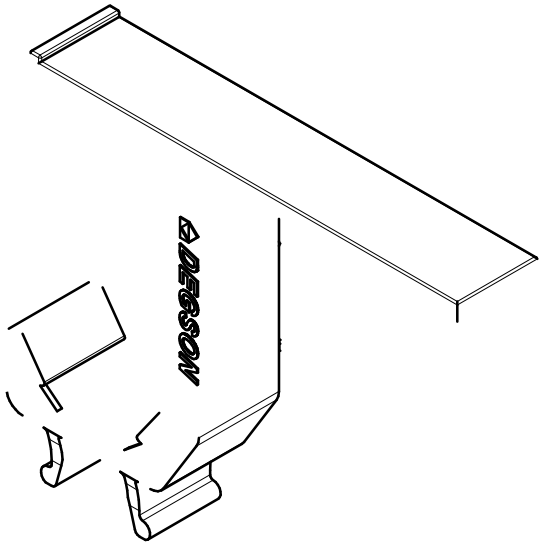

使用温度范围/ Operating temperature(℃)	- 40~+105
符合 RoHS环保要求/ Conform to RoHS	Yes
阻燃等级/ Flame class	UL94- V0

DEGSON

MATERIAL: PA66	SURFACE/COLOR:	
MAT NO./REV: 11060001552-1 / 00	MAT STATUS: work	

APPD:	李根劳	2025.06.17
CHKD:	马恩开	2025.06.17
DRFT:	郝路遥	2025.06.17

A4 mm (inch)

NAME: DTH5-25x5-11-00L(H)

DRAWING NO.	TYPE	DRAWING STATUS	SCALE	SHEET
200357735	CUSTOMER DRAWING	work	2:1	1/1

REV	ECN	DESCRIPTION	DRFT	DATE
00		NEW DRAWING	郝路遥	2025.06.17

Transfer or duplication of this document as well as the utilization or communication of its contents are prohibited unless explicit authorization is granted. Violations will be liable for compensation. All rights reserved for patent, utility model or designs registrations. 除非给予明确授权，否则禁止转让、复制、利用、交流本文件的内容，侵犯者将负赔偿责任。本公司保留对涉及发明、实用新型种外观专利的所有权利。