# PMR209ME6470M220R30

Aliases (P409EL474M250AH221)

Not for New Design

PMR209, Film, Metallized Paper, Resistor/Capacitor, 0.47 uF, 20%, 630 VDC, 85°C, 25.4 mm

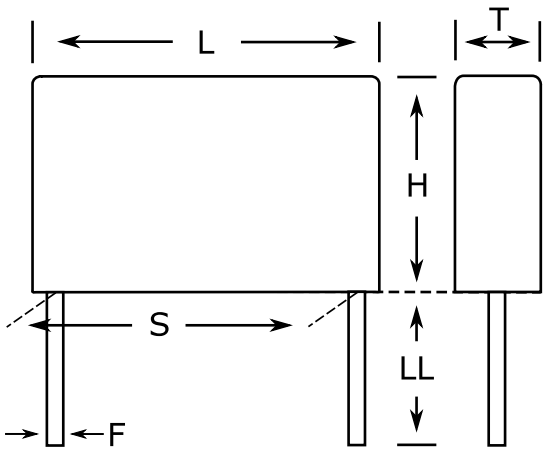


Click here for the 3D model.

| General Information | |
|---|---|
| Series | PMR209 |
| Dielectric | Metallized Paper |
| Style | Radial |
| Features | RC Unit approved |
| RoHS | Yes |
| Termination | Tinned Wire |
| Lead | Wire Leads |
| Qualifications | ENEC, UL, cUL |
| Construction | Molded |
| Typical Component Weight | 13.5 g |
| Miscellaneous | Resistor= 220 Ohms. |
| Notes | Not For New Design, Please Use The New P409 Series @ 275 VAC. |

| Dimensions | |
|---|---|
| L | 30.5mm MAX |
| H | 22mm MAX |
| T | 15.3mm MAX |
| S | 25.4mm +/-0.4mm |
| LL | 30mm +5mm |
| F | 1mm +/-0.05mm |

| Packaging Specifications | |
|---|---|
| Packaging | Bulk, Bag |
| Packaging Quantity | 75 |

| Specifications | |
|---|---|
| Capacitance | 0.47 uF |
| Tolerance | 20% |
| Voltage DC | 630 VDC |
| Voltage AC | 250 VAC |
| Temperature Range | -40/+85°C |
| Rated Temperature | 85°C |
| Insulation Resistance | 2.128 GOhms |
| Safety Class | X2 |

Statements of suitability for certain applications are based on our knowledge of typical operating conditions for such applications, but are not intended to constitute - and we specifically disclaim - any warranty concerning suitability for a specific customer application or use. This Information is intended for use only by customers who have the requisite experience and capability to determine the correct products for their application. Any technical advice inferred from this Information or otherwise provided by us with reference to the use of our products is given gratis, and we assume no obligation or liability for the advice given or results obtained.



© 2006 - 2026 YAGEO