APPROVED: _____

DATE: _____ TITLE: _____

Rev	AWO #	Description	Date	Appr
-		RELEASED	12/4/07	
A		REVISED DIM.	3/22/10	
B		UPDATE DRAWING	1/9/24	WX/TY
C		UPDATE DRAWING	8/28/26	LW1/MC

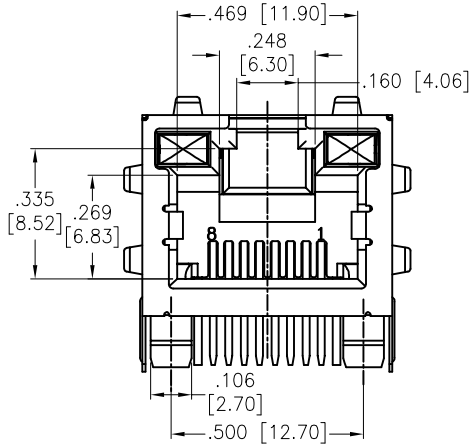

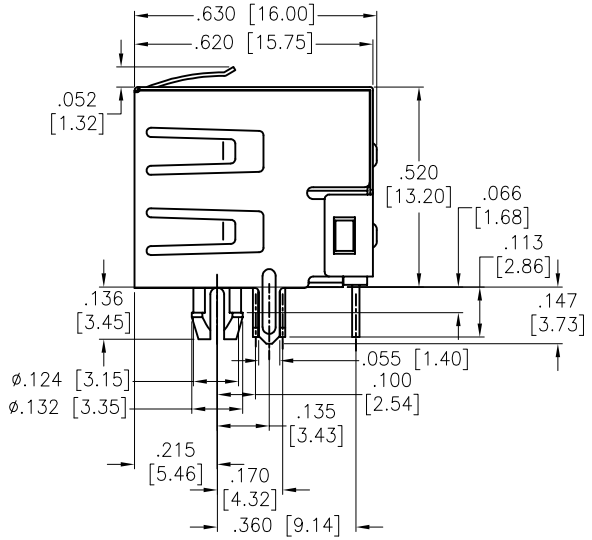

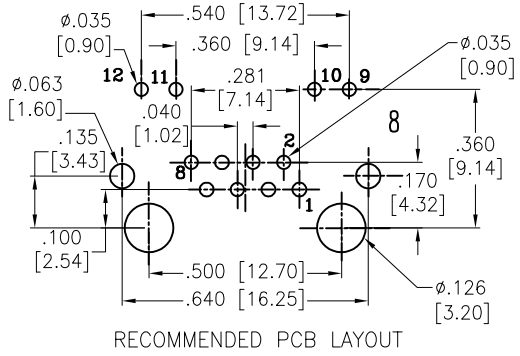

RECOMMENDED PCB LAYOUT

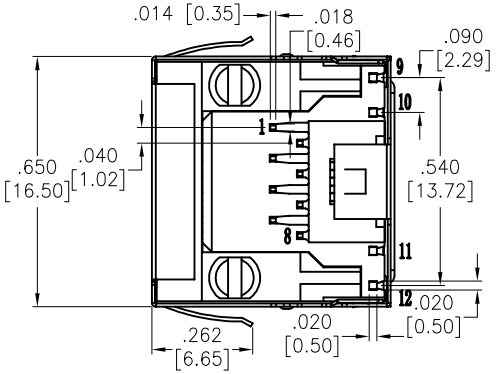

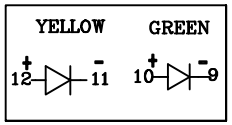

SPECIFICATIONS:

Material:
Insulator: PBT, rated UL 94V–0, Color: Black
Terminal: Phosphor Bronze
Shield: Brass, Nickel Plated

Plating:
Round contact
Gold over Nickel underplate overall
Flat contact
Gold over Nickel underplate on contact area
Matte Tin over Nickel underplate on solder tails

Electrical:
Voltage Rating: 150V AC RMS
Current rating: 1.5A @ 25°C
Contact Resistance: 20 mohms max.
Insulation resistance: 1000 Mohms min @ 500V DC
Dielectric withstanding voltage:
Contact to Contact: 1,000V DC or AC Peak
Contact to Shield: 1,500V DC or AC Peak for 1 minute

Temperature Rating:
Operating temperature: –40°C to +85°C

Environmental:
Lead free, RoHS compliant. RoHS COMPLIANT

UNLESS OTHERWISE SPECIFIED ALL DIMENSIONS ARE INCHES [MM]. TOLERANCES: EXCEPT AS NOTED

INCHES	.X	± .10	HOLES	ØX	±.10
	.XX	± .020		ØXX	±.015
	.XXX	± .015		ØXXX	±.010

DRAWN	SHIREN	12/4/07
CHECKED		
APPROVED		

CONFIDENTIAL AND PROPRIETARY
© Adam Tech. All rights reserved. This document contains confidential and proprietary information belonging to Adam Tech. It is provided solely for design and reference purposes by authorized parties. Any reproduction, distribution, display, or disclosure to third parties, in whole or in part, without the prior written consent of Adam Tech, is strictly prohibited. Adam Tech retains all rights, including copyright, trademark, trade secret, and all other intellectual property rights worldwide.

ADAM TECH
909 Rahway Avenue,
Union, NJ 07083
Phone: 908-687-5000
adam-tech.com

TITLE
MODULAR TELEPHONE JACK, W/ PANEL GROUNDS
RIGHT ANGLE, W/ LED1 YELLOW, LED2 GREEN

SIZE	PART NO.	REV.
X	MTJ-88ARX1-FSM-PG-LG	C

REF:	SCALE:	SHEET
S00005C	NTS	1 OF 1