6.30GHz Surface Mount Bandpass Filter

B062MC5S

www.knowlescapacitors.com

DESCRIPTION

DLI's surface mount bandpass filters utilize DLI's low loss temperature stable materials which offer small size and minimal performance variation over temperature. The catalog BPF's are offered in a variety of frequency bands, which offers a drop in solution with highly repeatable performance.

FEATURES

- Small Size
- Fully Shielded Component
- Solder Surface Mount Package
- Moisture Sensitivity Level: MSL1
- Frequency Stable over Temperature
- Operating & Storage Temp: -55˚C to +125˚C
- Characteristic Impedance: 50Ω

Packaging and Ordering Information:

To request tape and reel packaging, please order part number B062MC5S-T, see additional data on page 5.

SPECIFICATIONS*

Parameter	Frequency Range (GHz)	Min	Typ.	Max
Insertion Loss (dB)	5.9 - 6.7		2.0	3.0
Return Loss (dB)		10.0	12.0	
Low Side Rejection (dB)	DC - 5.0	40.0	45.0	
High Side Rejection (dB)	7.5 - 15.0	40.0	45.0	
CW Input Power (W)**				15
θ_{JC} $\left(\frac{°C}{W}\right)$	5			
Size (L x W x H)	0.500 x 0.250 x 0.098 in 12.7 x 6.35 x 2.49 mm			

*Electrical specifications based on typical probed performance at room temperature. Insertion loss shall vary ±0.5dB over temperature.

**Power rating assumes the component will be mounted to a PCB with good thermally conducting ground vias as outlined in the recommended PCB layout that are connected to an adequate heat sink. Max power is based on 125°C base temperature.

Information in this document is for informational and guideline purposes only. All information regarding the Product described in this datasheet is subject to change from time to time at Knowles Precision Devices' sole discretion. It is the customer's sole responsibility to evaluate the suitability of the Product in the customer's particular application. Knowles Precision Devices assumes no responsibility or liability for the use of the information contained within.

2777 Route 20 East, Cazenovia, NY 13035| Ph.: (315)655-8710

To Order Contact KCCSales@knowles.com | For Technical Inquiries Contact DLIengineering@knowles.com

6.30GHz Surface Mount Bandpass Filter

B062MC5S

Typical Measured Performance

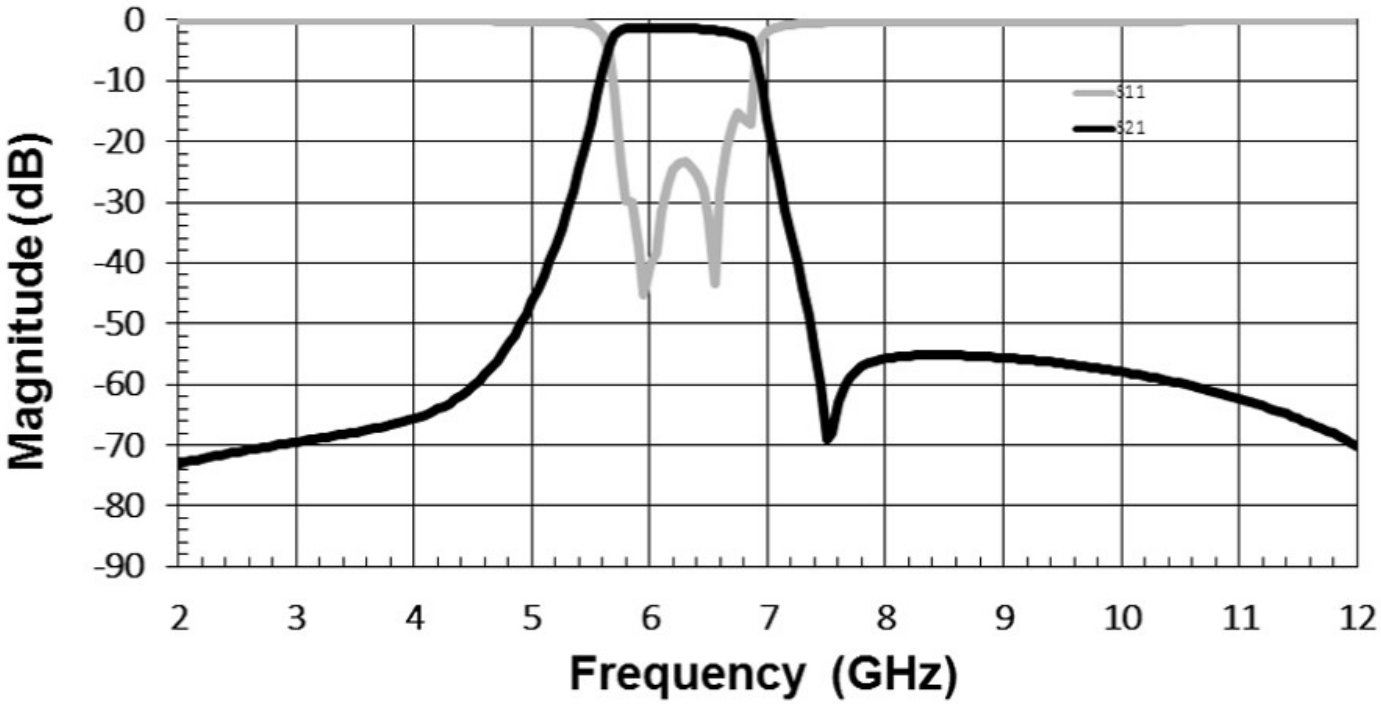

*Typical de-embedded measured performance mounted on a connectorized test fixture. DEB is 0.010in RO4350B with 50.0Ohm CPW ground traces going into the ports at room temperature.

2777 Route 20 East, Cazenovia, NY 13035| Ph.: (315)655-8710

To Order Contact KCCSales@knowles.com | For Technical Inquiries Contact DLIengineering@knowles.com

DIELECTRIC LABORATORIES
a Knowles Precision Devices brand

knowles PRECISION DEVICES

6.30GHz Surface Mount Bandpass Filter

B062MC5S

www.knowlescapacitors.com

Physical Dimensions

Units = inches

Top View



Side View

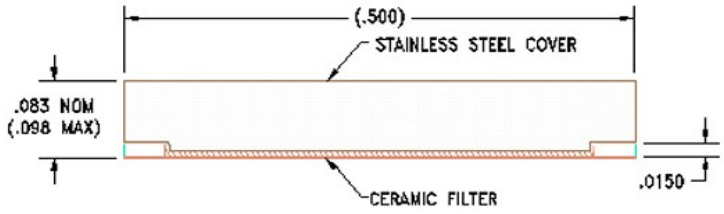

End View

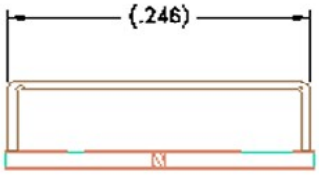

Bottom View

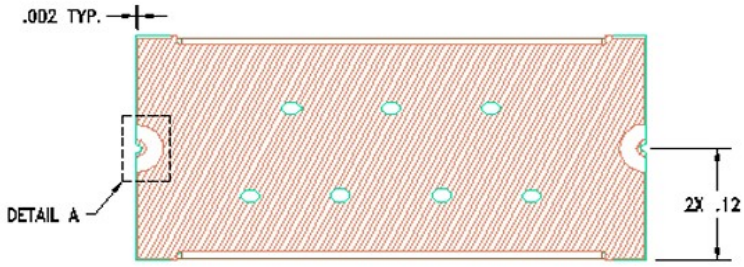

Notes :

1. Termination Finish:

   ENIG: 3 - 6 µinch Au over 50 µinch Ni

2. Maximum Assembly Process Temperature: 250°C

Tolerances:

For values with 3 decimal places ±0.001

For values with 4 decimal places ±0.0005

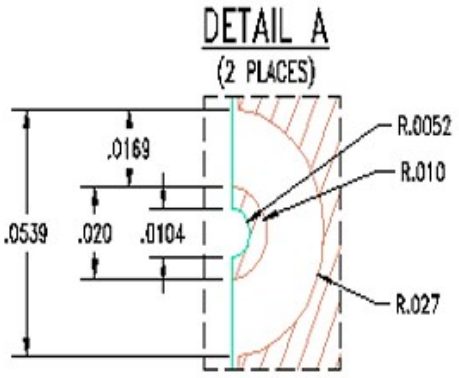

2777 Route 20 East, Cazenovia, NY 13035| Ph.: (315)655-8710

To Order Contact KCCSales@knowles.com | For Technical Inquiries Contact DLIengineering@knowles.com

Recommended PCB Layout

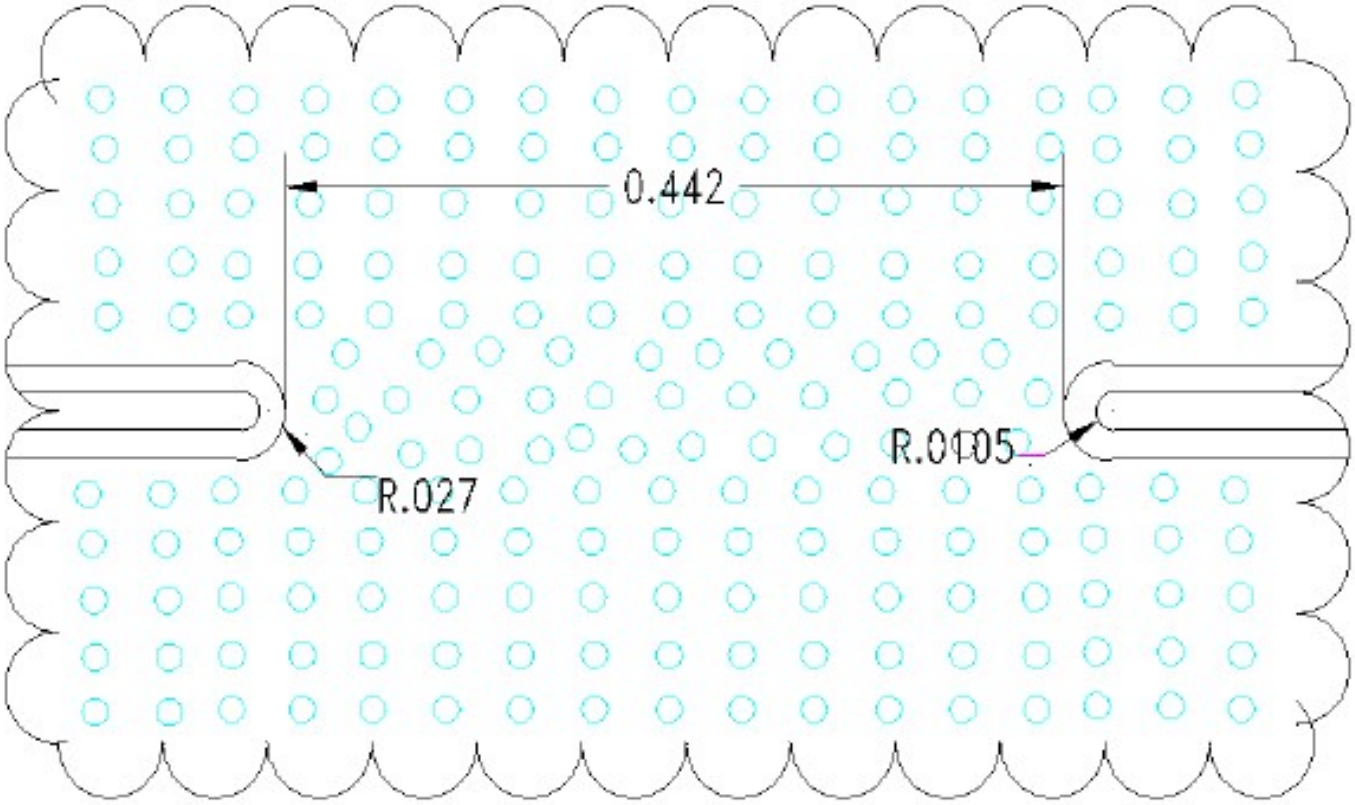

Unit = inches

Note:

- 50Ω trace dimensions are application specific.
- Ensure adequate grounding beneath the part.

For further details and best practices, reference the **Microwave Products Guide,** available at: https://www.knowlescapacitors.com/Support/Catalogs

6.30GHz Surface Mount Bandpass Filter
B062MC5S

TAPE AND REEL INFORMATION

REEL DIMENSIONS

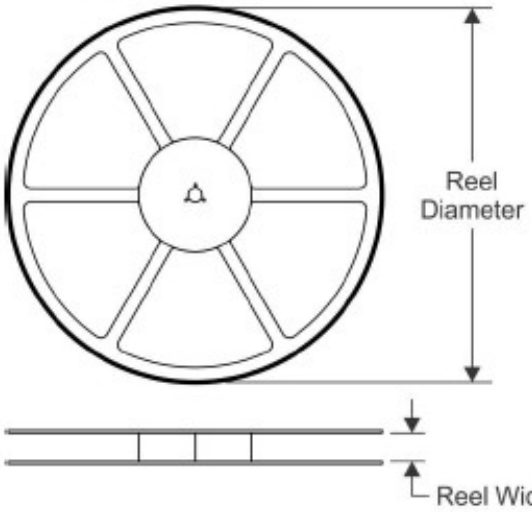

TAPE DIMENSIONS

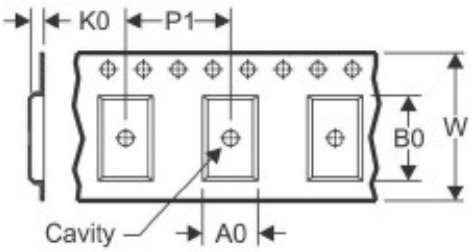

A0	Dimension designed to accommodate the component width
B0	Dimension designed to accommodate the component length
K0	Dimension designed to accommodate the component thickness
W	Overall width of the carrier tape
P1	Pitch between successive cavity centers

QUADRANT ASSIGNMENTS FOR PIN 1 ORIENTATION IN TAPE

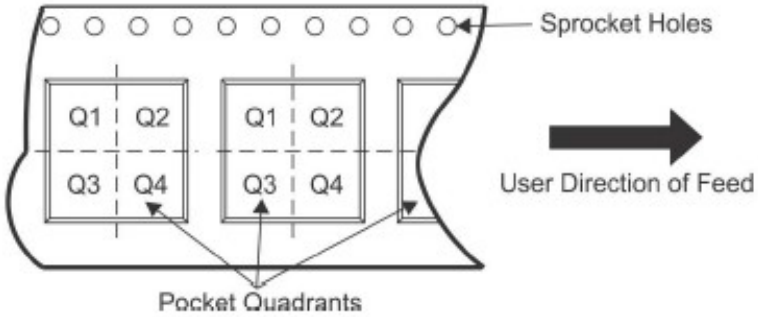

*All dimensions are nominal

Device	Package Type	Reel Diameter (mm)	Reel Width W1 (mm)	A0 (mm)	B0 (mm)	K0 (mm)	P1 (mm)	W (mm)	Pin1 Quadrant
B062MC5S-T	SMD	180	24.4	6.7	13.0	2.8	12	24	Q1&2

2777 Route 20 East, Cazenovia, NY 13035| Ph.: (315)655-8710

To Order Contact KCCSales@knowles.com | For Technical Inquiries Contact DLIengineering@knowles.com