FOR-1755 Rev.2.2

未注公差/General tolerances(mm)														
0 ~ 3	>3 ~ 6	>6 ~ 10	>10 ~ 18	>18 ~ 30	>30 ~ 50	>50 ~ 80	>80 ~ 120	>120 ~ 180	>180 ~ 250	>250 ~ 315	>315 ~ 400	>400 ~ 500	>500	0.1/10
±0.12	±0.18	±0.22	±0.26	±0.31	±0.37	±0.57	±0.80	±0.93	±1.05	±1.15	±1.60	±2.20	±2.50	±2°

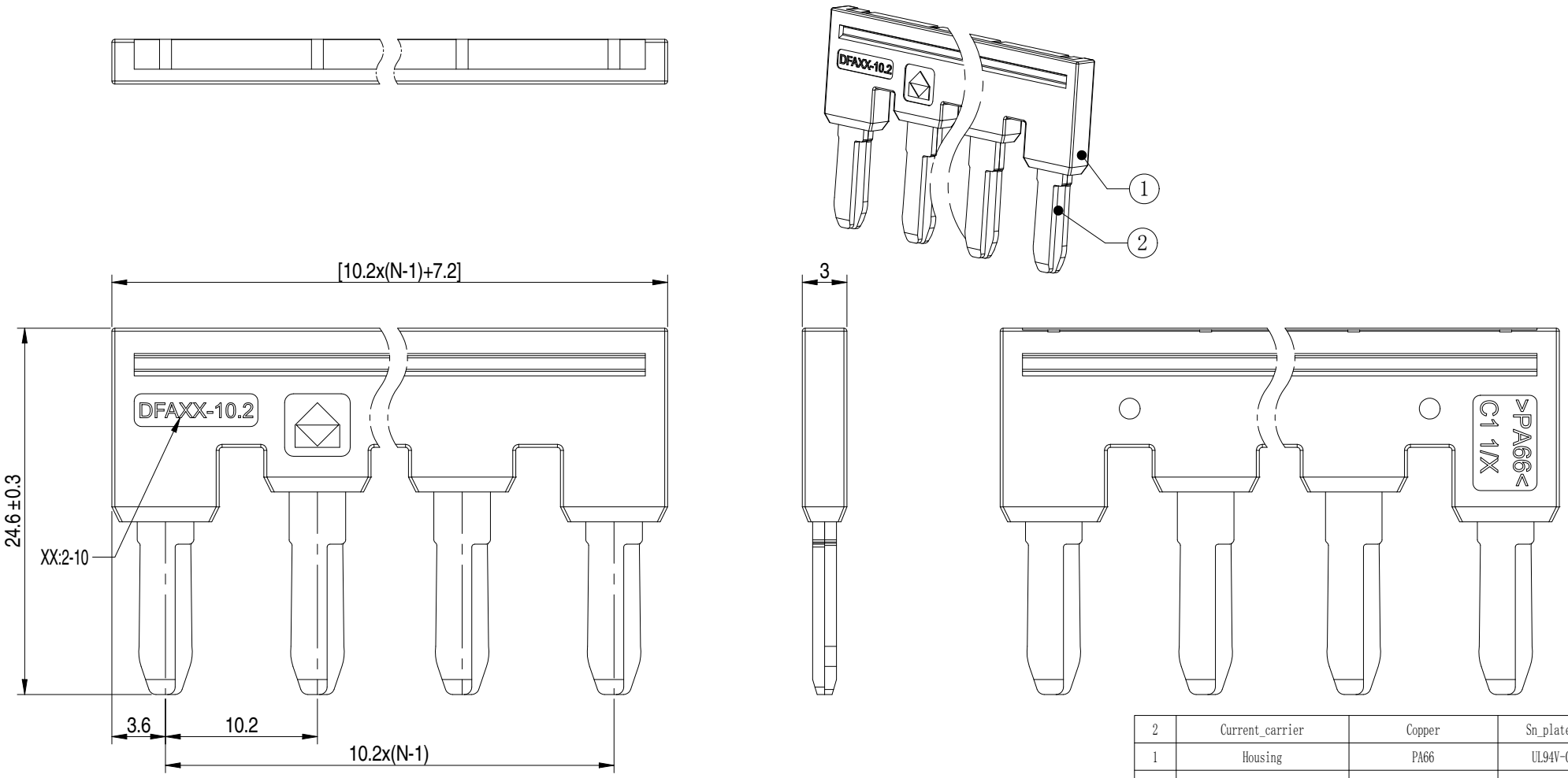

ITEM	NAME OF PART	MATERIAL	NOTES
2	Current_carrier	Copper	Sn_plated
1	Housing	PA66	UL94V-0

间距/Pitch(mm)/线数范围/Poles	10.2/N=2~10P
使用温度范围/Operating temperature(° C)	-40~+105
符合 RoHS 环保要求/Conform to RoHS	Yes
标准颜色编号/Standard color number: PANTONE / RAL	/

DEGSON

MATERIAL:		SURFACE/COLOR:
MAT NO./REV:	/ 00	MAT STATUS: work

APPD:	李根劳	2025.05.23
CHKD:	马恩开	2025.05.23
DRFT:	宗明忠	2025.05.23

A4 mm (inch)

NAME: DFAXX-10.2-1Y-00L(H)

DRAWING NO.	TYPE	DRAWING STATUS	SCALE	SHEET
200349314	CUSTOMER DRAWING	work	2:1	1/1

REV	ECN	DESCRIPTION	DRFT	DATE
00		NEW DRAWING	宗明忠	2025.05.23

Transfer or duplication of this document as well as the utilization or communication of its contents are prohibited unless explicit authorization is granted. Violations will be liable for compensation. All rights reserved for patent, utility model or designs registrations. 除非给予明确授权，否则禁止转让、复制、利用、交流本文件的内容。侵犯者将负赔偿责任。本公司保留对涉及发明、实用新型和外观专利的所有权利。