RClamp4041ZA

Ultra Small RClamp® ESD & EOS Protection For USB Data Lines

PROTECTION PRODUCTS

Description

RClamp® TVS diodes are designed to protect sensitive electronics from damage or latch-up due to ESD & EOS. These devices offer desirable characteristics for board level protection including fast response time, low operating and clamping voltage, and no device degradation.

RClamp®4041ZA features extremely good ESD protection characteristics highlighted by low typical dynamic resistance of 0.07 Ohms, low peak ESD clamping voltage, and high ESD withstand voltage (+/-30kV contact per IEC 61000-4-2). Low maximum capacitance (0.65pF at V_R=0V) minimizes loading on sensitive circuits. Each device will protect one high-speed data line operating at 4 Volts.

RClamp4041ZA is in a DFN 0.60 x 0.30 x 0.25 mm 2-Lead package. The small package gives the designer the flexibility to protect single lines in applications where arrays are not practical. The combination of small size and high ESD surge capability makes them ideal for use in portable applications.

Features

- ESD protection for high speed lines to
  - IEC 61000-4-2 (ESD): +/-30kV (Contact & Air)
  - IEC 61000-4-4 (EFT): 4kV, 80A
  - IEC 61000-4-5 (Lightning): 20A (tp = 8/20µs)
- Ultra-small package
- Protects one data line
- Low ESD clamping voltage
- Working voltage: 4.0V
- Low capacitance: 0.65pF maximum
- Low leakage current
- Low dynamic resistance: 0.07Ω (typ)
- Solid-state silicon-avalanche technology

Mechanical Characteristics

- Package: DFN 0.60 x 0.30 x 0.25 mm 2-Lead
- Pb-Free, Halogen Free, RoHS/WEEE compliant
- Lead Finish: Lead-free
- Marking: Marking code
- Packaging: Tape and Reel

Applications

- USB 2.0
- MiPi/MDDI
- MHL
- Wearables

Package Dimension

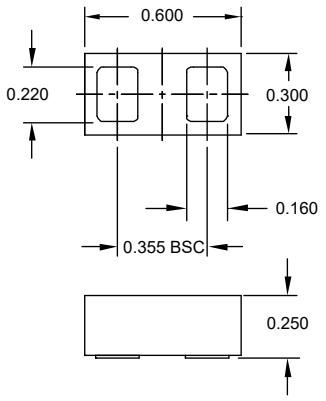

Schematic & Pin Configuration

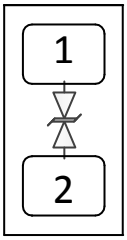

DFN 0.60 x 0.30 x 0.25mm 2-Lead (Bottom View)

Absolute Maximum Rating

Rating	Symbol	Value	Units
Peak Pulse Power (tp = 8/20µs)	P_{PK}	160	W
Peak Pulse Current (tp = 8/20µs)	I_{PP}	20	A
ESD per IEC 61000-4-2 (Air)(1) ESD per IEC 61000-4-2 (Contact)(1)	V_{ESD}	±30 ±30	kV
Operating Temperature	T_{OP}	-40 to +125	°C
Junction Temperature & Storage Temperature	T_J & T_{STG}	-55 to +150	°C

Electrical Characteristics (T=25°C unless otherwise specified)

Parameter	Symbol	Conditions		Min.	Typ.	Max.	Units
Reverse Stand-Off Voltage	V_{RWM}					4	V
Reverse Breakdown Voltage	V_{BR}	I_t = 1mA		6	7.6	10	V
Reverse Leakage Current	I_R	V_{RWM} = 4V			<10	50	nA
Clamping Voltage[2]	V_C	I_{PP} = 20A, tp = 1.2/50µs (Voltage), 8/20µs (Current) Combination Waveform, R_S = 2 Ω			5.6	8	V
ESD Clamping Voltage[3]	V_C	t_p = 0.2/100ns	I_{PP} = 4A		2.8		V
			I_{PP} = 16A		3.7		
Dynamic Resistance[3,4]	R_{DYN}	t_p = 0.2/100ns			0.07		Ω
Junction Capacitance	C_J	V_R = 0V, f = 1MHz			0.53	0.65	pF

Notes:

1) ESD gun return path connected to ESD ground plane.

2) Measured using a 1.2/50µs voltage, 8/20µs current combination waveform, R_S = 2 Ohms. Clamping is defined as the clamping voltage after the device snaps back to a conducting state.

3) Transmission Line Pulse Test (TLP) Settings: tp = 100ns, tr = 0.2ns, I_{TLP} and V_{TLP} averaging window: t1 = 70ns to t2 = 90ns.

4) Dynamic resistance calculated from I_{TLP} = 4A to I_{TLP} = 16A

Typical Characteristics

ESD Clamping (8kV Contact per IEC 61000-4-2)

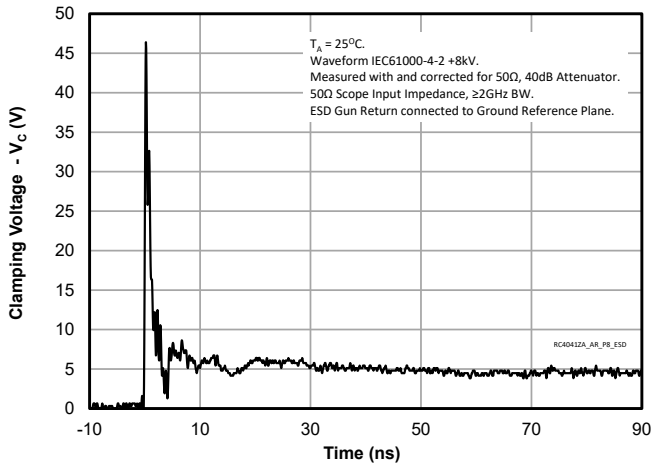

ESD Clamping (-8kV Contact per IEC 61000-4-2)

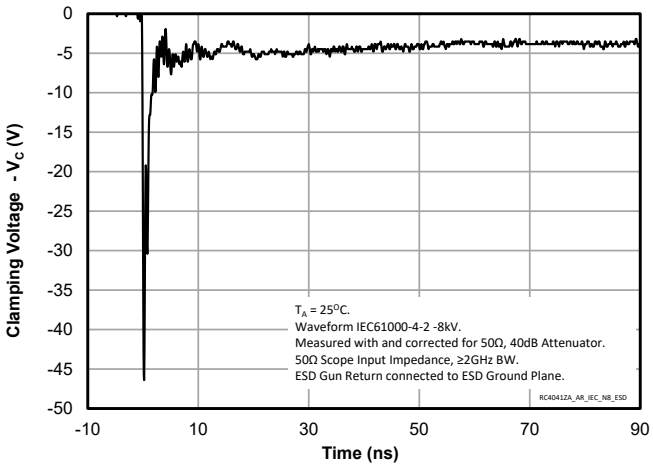

TLP Characteristic (Positive Pulse)

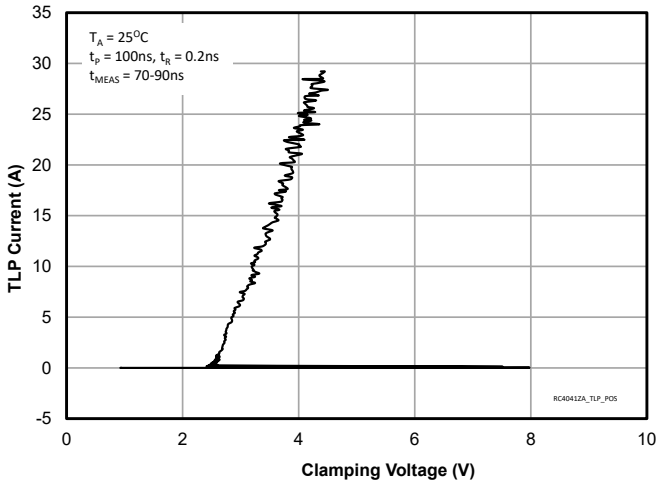

Clamping Voltage Waveform (tp=1.2/50µs)

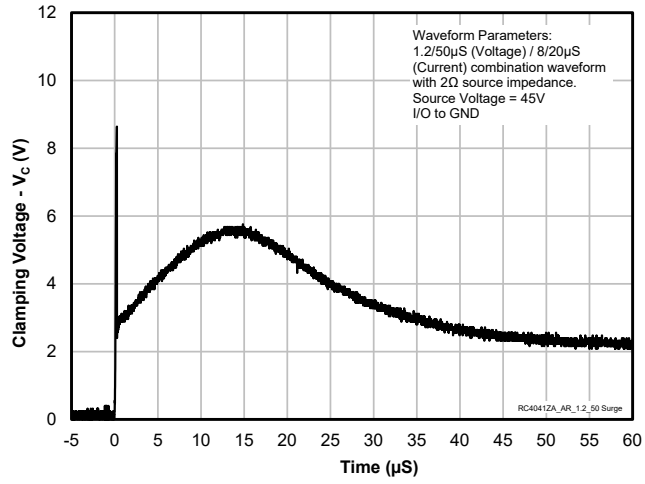

Capacitance vs. Reverse Voltage

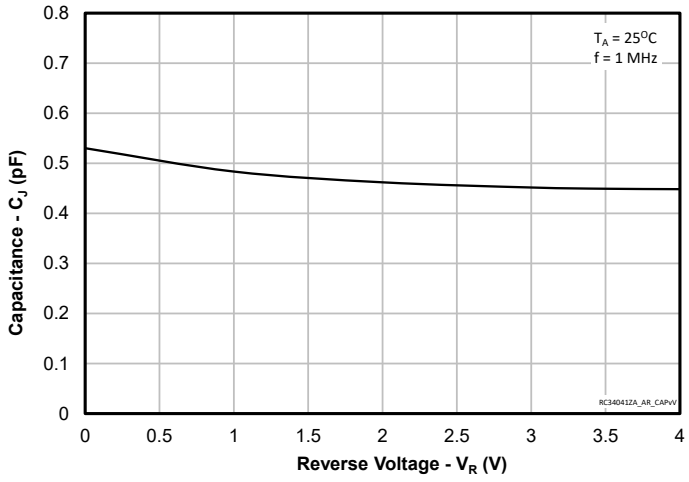

Insertion Loss - S21

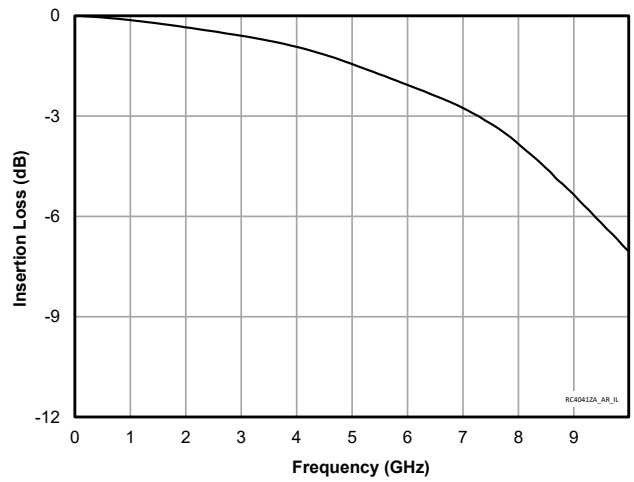

Application Information

Assembly Guidelines

The small size of this device means that some care must be taken during the mounting process to insure reliable solder joints. The figure at the right details Semtech's recommended mounting pattern. Recommended assembly guidelines are shown in Table 1. Note that these are only recommendations and should serve only as a starting point for design since there are many factors that affect the assembly process. Exact manufacturing parameters will require some experimentation to get the desired solder application.

Solder Stencil

Stencil design is one of the key factors which will determine the volume of solder paste which is deposited onto the land pad. The area ratio of the stencil aperture will determine how well the stencil will print. The area ratio takes into account the aperture shape, aperture size, and stencil thickness. A minimum area ratio of 0.66 is preferred for the subject package. The area ratio of a rectangular aperture is given as:

Area Ratio = (L * W)/ (2 * (L + W) * T)

Where:
L = Aperture Length
W = Aperture Width
T = Stencil Thickness

Semtech recommends a stencil with square aperture and rounded corners for consistent solder release. The stencil should be laser cut with electro-polished finish. A stencil thickness of 0.075mm (0.003") is recommended. A 0.100mm (0.004") stencil may be used, however the stencil opening may need to be increased slightly to achieve the desired area ratio to ensure proper solder coverage on the pad.

Recommended Mounting Pattern

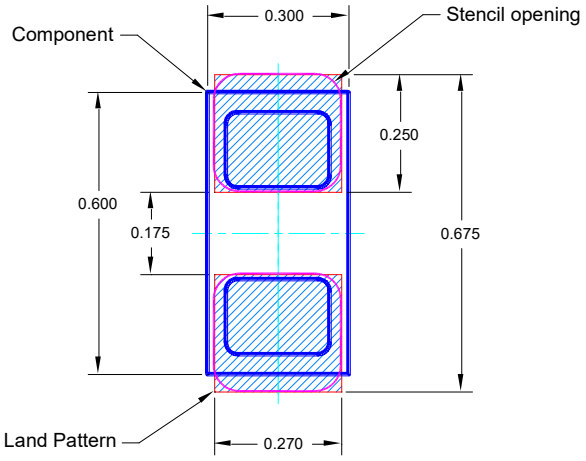

All Dimensions are in mm.

Land Pad. Stencil opening Component

Table 1 - Assembly Guidelines

Assembly Parameter	Recommendation
Solder Stencil Design	Laser Cut, Electro-Polished
Aperture Shape	Rectangular with Rounded Corners
Solder Stencil Thickness	0.075mm (0.003") or 0.100mm (0.004")
Solder Paste Type	Type 4 Size Sphere or Smaller
Solder Reflow Profile	Per JEDEC J-STD-020
PCB Solder Pad Design	Solder Mask Defined or Non Solder Mask Defined
PCB Pad Finish	OSP or NiAu

Outline Drawing - DFN 0.60 x 0.30 x 0.25mm 2-Lead

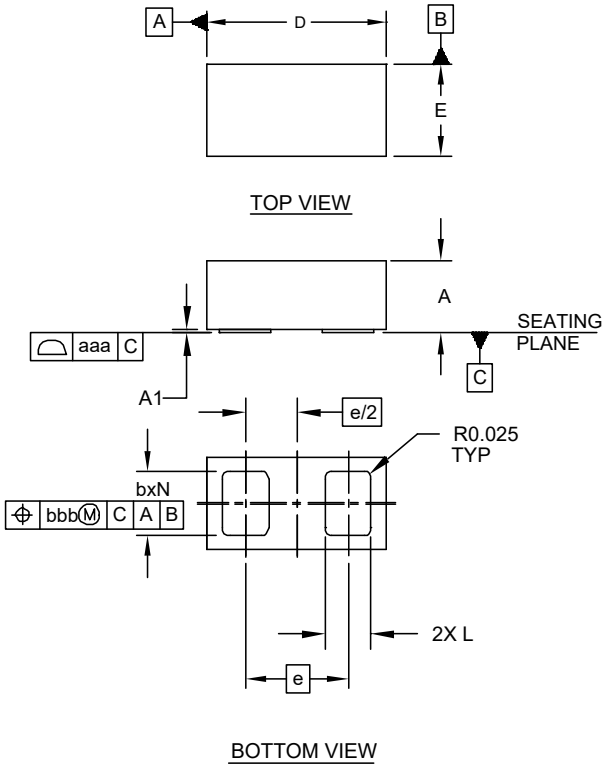

DIMENSIONS			
DIM	MILLIMETERS		
	MIN	NOM	MAX
A	0.235	0.250	0.265
A1	0.000	0.010	0.050
b	0.200	0.220	0.240
D	0.580	0.600	0.620
E	0.280	0.300	0.320
e	0.355 BSC		
L	0.140	0.160	0.180
N	2		
aaa	0.08		
bbb	0.10		

NOTES:
1. CONTROLLING DIMENSIONS ARE IN MILLIMETERS (ANGLES IN DEGREES).

Land Pattern - DFN 0.60 x 0.30 x 0.25mm 2-Lead

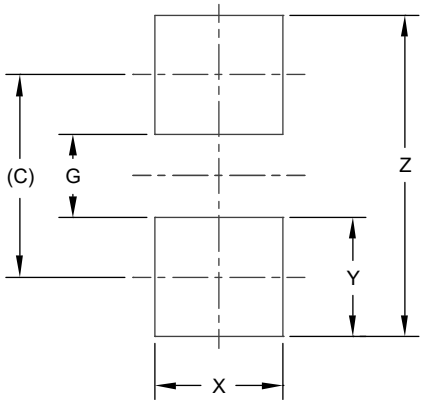

DIMENSIONS	
DIM	MILLIMETERS
(C)	(0.425)
G	0.175
X	0.270
Y	0.250
Z	0.675

NOTES:
1. CONTROLLING DIMENSIONS ARE IN MILLIMETERS (ANGLES IN DEGREES).
2. THIS LAND PATTERN IS FOR REFERENCE PURPOSES ONLY. CONSULT YOUR MANUFACTURING GROUP TO ENSURE YOUR COMPANY'S MANUFACTURING GUIDELINES ARE MET.

Marking Code

40

Tape and Reel Specification

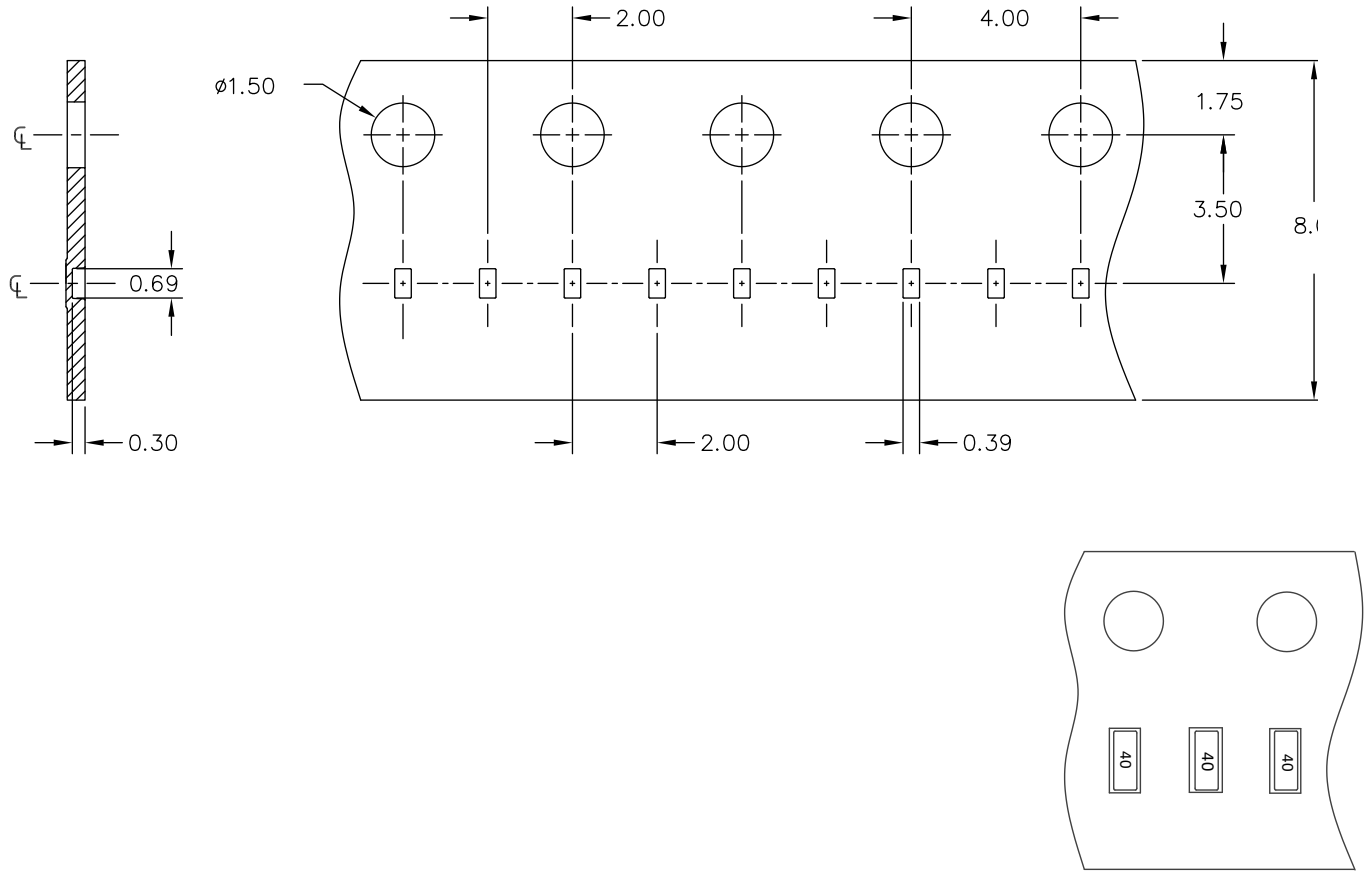

Ordering Information

Part Number	Qty per Reel	Reel Size
RClamp4041ZATFT	15,000	7″
RailClamp and RClamp are registered trademarks of Semtech Corporation.		



Important Notice

Information relating to this product and the application or design described herein is believed to be reliable, however such information is provided as a guide only and Semtech assumes no liability for any errors in this document, or for the application or design described herein. Semtech reserves the right to make changes to the product or this document at any time without notice. Buyers should obtain the latest relevant information before placing orders and should verify that such information is current and complete. Semtech warrants performance of its products to the specifications applicable at the time of sale, and all sales are made in accordance with Semtech's standard terms and conditions of sale.

SEMTECH PRODUCTS ARE NOT DESIGNED, INTENDED, AUTHORIZED OR WARRANTED TO BE SUITABLE FOR USE IN LIFE-SUPPORT APPLICATIONS, DEVICES OR SYSTEMS, OR IN NUCLEAR APPLICATIONS IN WHICH THE FAILURE COULD BE REASONABLY EXPECTED TO RESULT IN PERSONAL INJURY, LOSS OF LIFE OR SEVERE PROPERTY OR ENVIRONMENTAL DAMAGE. INCLUSION OF SEMTECH PRODUCTS IN SUCH APPLICATIONS IS UNDERSTOOD TO BE UNDERTAKEN SOLELY AT THE CUSTOMER'S OWN RISK. Should a customer purchase or use Semtech products for any such unauthorized application, the customer shall indemnify and hold Semtech and its officers, employees, subsidiaries, affiliates, and distributors harmless against all claims, costs damages and attorney fees which could arise.

The Semtech name and logo are registered trademarks of the Semtech Corporation. All other trademarks and trade names mentioned may be marks and names of Semtech or their respective companies. Semtech reserves the right to make changes to, or discontinue any products described in this document without further notice. Semtech makes no warranty, representation or guarantee, express or implied, regarding the suitability of its products for any particular purpose. All rights reserved.

© Semtech 2021

Contact Information

Semtech Corporation
200 Flynn Road, Camarillo, CA 93012
Phone: (805) 498-2111, Fax: (805) 498-3804
www.semtech.com