APPROVED: _____

DATE: _____ TITLE: _____

Rev	AWO #	Description	Date	Appr
-		RELEASED	6/26/06	
A		REDRAWN	06/20/13	

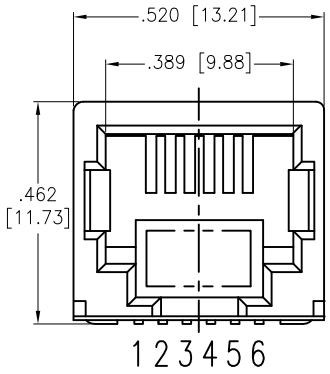

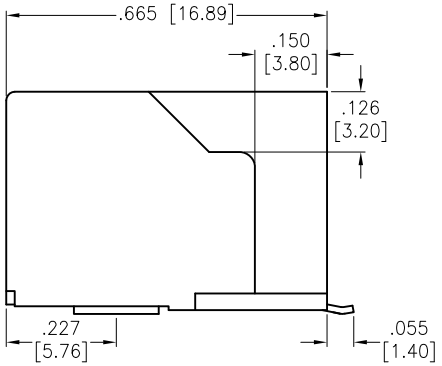

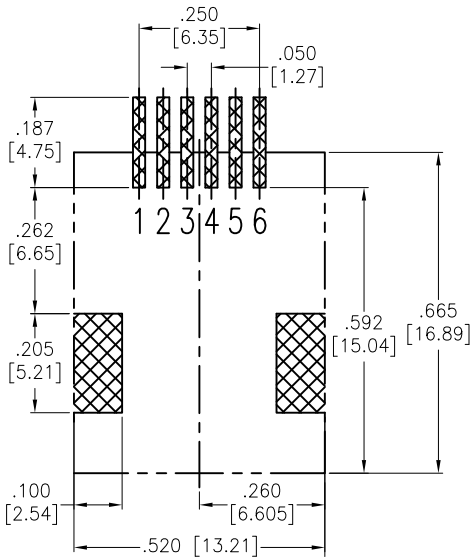

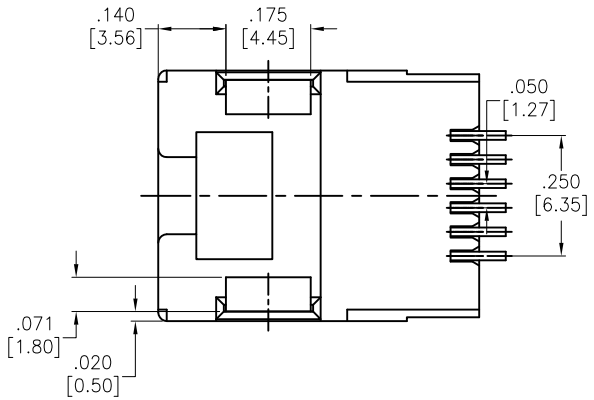

RECOMMENDED PCB LAYOUT

SPECIFICATIONS:
Material:
Insulator: Hi-temp thermoplastic, rated UL 94V-0
Insulator color: Black
Contacts: Phosphor Bronze
Plating:
Gold over Nickel underplate on contact area,
Tin over Copper underplate on PCB tails
Electrical:
Operating voltage: 125 VAC max
Current rating: 1.5 Amps max
Contact resistance: 20 mohms max
Insulation resistance: 1000 Mohms min @ 500 VDC
Dielectric withstanding voltage: 1000 VAC for 1 minute
Temperature Rating:
Operating temperature: -40°C to +125°C
Environmental:
Lead free, RoHS compliant.

RoHS COMPLIANT

X	PLATING
0	15 µin Gold
1	30 µin Gold
2	50 µin Gold

UNLESS OTHERWISE SPECIFIED
ALL DIMENSIONS ARE INCHES
TOLERANCES: EXCEPT AS NOTED

INCHES		HOLES	
.X	± .10	Ø.X	±.10
.XX	± .020	Ø.XX	±.015
.XXX	± .015	Ø.XXX	±.010

APPROVALS		DATE
DRAWN	SS	6/26/06
CHECKED		
APPROVED		

ADAM TECH
909 Rahway Avenue, Union, NJ 07083
Phone: 908-687-5000 Fax: 908-687-5710

TITLE: MODULAR TELEPHONE JACK, 6P6C
SMT, COLOR BLACK, X GOLD

SIZE	PART NO.	REV.
X	MTJ-66WAX1	A

REF:	SCALE:	SHEET
S00065T	NTS	1 OF 1