GlobTek, Inc.
www.globtek.com
186 Veterans Drive,
Northvale, NJ 07647
Tel. (201) 784-1000
Fax (201) 784-0111

Drawing Title: , , Efficiency Level: , Case Color/Style: GlobTek Black, , , Input Rating: , , Output Rating: W, 0.0V@0.0A, Output Configuration: mm, / Cond, , , Ferrite: , , GT Cord # , Pin Out: , Blades/Input Cord: , Approvals: to , GT Cable #: / Conductors, mm	
Model No. CMC40MH2W(R)	
Part No./Ordering No. CMC40MH2W(R)	Rev A

In Addition to GlobTek Inc.'s renewed ISO9001:2008 - Quality Management System Certification, GlobTek Inc. is now certified to:

ISO13485:2003 - Medical Devices Quality Management System Certification
ISO14001:2004 - Environmental Management System Certification

ISO Certificates are available online at http://www.globtek.com/iso-certificates/

The acceptance of this specification and use of the product described in this document indicates the acceptance and binding of the customer to Globtek TERMS AND CONDITIONS (attached to the end of this document), which supersede all other agreements, terms, and conditions (http://www.globtek.com/terms-and-conditions/).
Prop 65 Statement:https://www.globtek.com/prop-65-statement.pdf

Footnote:

GlobTek Inc. will not be liable for the safety and performance of these power supplies if unauthorized access and repair occurs. End user should consult applicable UL, CSA or EN standards for proper installation instruction.

Limitation of Use:

GlobTek products are intended for use with commercial, medical, and/or industrial equipment only. GlobTek product are not authorized for use as mission critical components in life support hazardous environment, nuclear or aircraft applications without prior written approval from the CEO of GlobTek Inc.
Contents of this document are subject to change without prior notice.

Customer Approval of Specification:

Please approve, sign and send back to GlobTek so we can complete order processing.
A delay in receipt of this form will delay delivery schedule.

Company Name:	Customer P/N:
Quote Number:	Date:
Authorized Representative Name:	Authorized Representative Signature:

PROPRIETARY INFORMATION
PROPRIETARY OF GLOBTEK, INC. ANY REPRODUCTION, DISCLOSURE OR USE OF THIS DRAWING, IN WHOLE OR IN PART, IS HEREBY PROHIBITED EXCEPT AS SPECIFIED IN WRITING BY GLOBTEK, INC. © GlobTek, Inc. 2019 - 2026
guest /10/25/2026 12:57:26 PM

REVISION HISTORY

REV	DESCRIPTION	SUB	DATE	APPROVED
A	Initial release	DR	05/15/2019	QA

AGENCY ONLINE DOCUMENTS

RoHS/RoHS3 Declaration	https://www.globtek.com/dcs/SPJ8VNR/ugtIDld0Ja4rsK4I_JHJGQ
REACH Declaration	https://www.globtek.com/r2/eM2co8
Conflict Minerals Declaration	https://www.globtek.com/r2/SNw6P3
Prop 65 Statement	https://www.globtek.com/r2/VMPRnr

IPXY rating is based on 3rd party testing and customers should check suitability and test system level IPXY rating before ordering.
MINIATURE COMMON MODE CHOKE/AC LINE FILTER

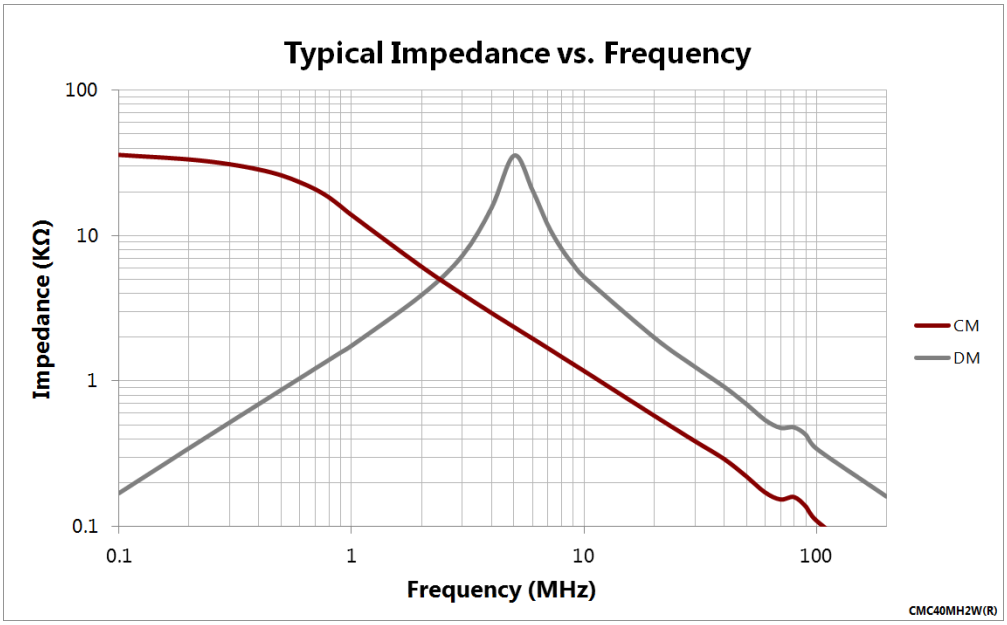

Inductance: 35mH Min @ 1KHz
Current Rating: 125mA
DC Resistance: 4.2 Ohms Typ. ea. Winding.
Rated Voltage: 310Vac
Operating Temperature: -40°C to +105°C
Thermal Class B (130°C) [Designation GTX-1; UL File # E243347]
Core Initial Permeability(ui) is 12000±30%

DIELECTRIC STRENGTH TEST (HI-POT)
1500 VAC 5mA COIL TO COIL 1 MIN
500 VAC 5mA COIL TO CORE 1 MIN

INSULATION RESISTANCE
OVER 100 Mohm AT 500 VDC BETWEEN COIL TO COIL AND COIL AND COIL TO CORE

MECHANICAL DRAWING:

PROPRIETARY INFORMATION
PROPRIETARY OF GLOBTEK, INC. ANY REPRODUCTION, DISCLOSURE OR USE OF THIS DRAWING, IN WHOLE OR IN PART, IS HEREBY PROHIBITED EXCEPT AS SPECIFIED IN WRITING BY GLOBTEK, INC. © GlobTek, Inc. 2019 - 2026
guest /10/25/2026 12:57:26 PM

GlobTek, Inc.
www.globtek.com
186 Veterans Drive,
Northvale, NJ 07647
Tel. (201) 784-1000
Fax (201) 784-0111

Drawing Title: , , Efficiency Level: , Case Color/Style: GlobTek Black, , , Input Rating: , , Output Rating: W, 0.0V@0.0A, Output Configuration: mm, / Cond, , , Ferrite: , , GT Cord # , Pin Out: , Blades/Input Cord: , Approvals: to , GT Cable #: / Conductors, mm	
Model No. CMC40MH2W(R)	
Part No./Ordering No. CMC40MH2W(R)	Rev A

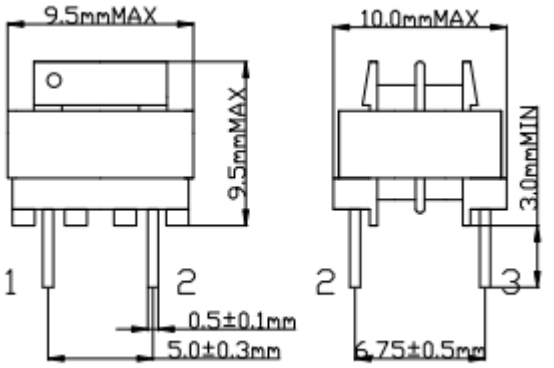

SIDE VIEW

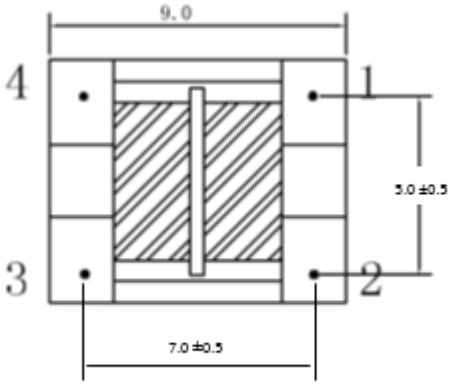

Bottom View

PCB HOLE PATTERN 7.0 X 5.0 MM

Notes on Use
Shelf Life: Use within 6 months. If the product is used after a storage period of 6 months or longer, confirm its solderability before use.

Storage Condition: Avoid storage in high temperature and high humidity environment, as such condition may deteriorate the solderability of external electrode. Avoid storage in atmosphere containing toxic gases or acid (e.g., sulphur and chlorine), as such gas may deteriorate the solderability of external electrode. Avoid storage near strong magnetic field, as such condition may magnetize the product.

Although GlobTek designs and manufactures its products to the most stringent quality and safety standards, given the current state of the art, isolated component failures may still occur. Accordingly, customer applications which require a high degree of reliability or safety should employ suitable designs or other safeguards (such as installation of protective circuitry or redundancies) in order to ensure that the failure of an electrical component does not result in a risk of personal injury or property damage

PROPRIETARY INFORMATION
PROPRIETARY OF GLOBTEK, INC. ANY REPRODUCTION, DISCLOSURE OR USE OF THIS DRAWING, IN WHOLE OR IN PART, IS HEREBY PROHIBITED EXCEPT AS SPECIFIED IN WRITING BY GLOBTEK, INC. © GlobTek, Inc. 2019 - 2026
guest /10/25/2026 12:57:26 PM

GlobTek, Inc.
www.globtek.com
186 Veterans Drive,
Northvale, NJ 07647
Tel. (201) 784-1000
Fax (201) 784-0111

Drawing Title: , , Efficiency Level: , Case Color/Style: GlobTek Black, , , Input Rating: , , Output Rating: W, 0.0V@0.0A, Output Configuration: mm, / Cond, , , Ferrite: , , GT Cord # , Pin Out: , Blades/Input Cord: , Approvals: to , GT Cable #: / Conductors, mm	
Model No. CMC40MH2W(R)	
Part No./Ordering No. CMC40MH2W(R)	Rev A

PACKAGING

Packing Spec P/N:	
Box Qty:	TBD
Gift Box Size (mm):	
Gift Box Color:	White
Master Carton Size (mm):	TBD
Master Carton Cubic Volume (m^3):	0.00
Master GW (Kg):	kg
wt Ea. (Kg):	kg
wt Ea. (Kg):	kg
LABEL SPECS: Standard GT,L-1186	
PACK SPEC:	

PROPRIETARY INFORMATION
PROPRIETARY OF GLOBTEK, INC. ANY REPRODUCTION, DISCLOSURE OR USE OF THIS DRAWING, IN WHOLE OR IN PART, IS HEREBY PROHIBITED EXCEPT AS SPECIFIED IN WRITING BY GLOBTEK, INC. © GlobTek, Inc. 2019 - 2026
guest /10/25/2026 12:57:26 PM