Quad Analog Switch/ Quad Multiplexer

MC14016B

The MC14016B quad bilateral switch is constructed with MOS P−channel and N−channel enhancement mode devices in a single monolithic structure. Each MC14016B consists of four independent switches capable of controlling either digital or analog signals. The quad bilateral switch is used in signal gating, chopper, modulator, demodulator and CMOS logic implementation.

Features

- Diode Protection on All Inputs
- Supply Voltage Range = 3.0 Vdc to 18 Vdc
- Linearized Transfer Characteristics
- Low Noise − 12 nV/$\sqrt{\text{Cycle}}$, f ≥ 1.0 kHz typical
- Pin−for−Pin Replacements for CD4016B, CD4066B (Note Improved Transfer Characteristic Design Causes More Parasitic Coupling Capacitance than CD4016)
- For Lower R_{ON}, Use The HC4016 High−Speed CMOS Device or The MC14066B
- This Device Has Inputs and Outputs Which Do Not Have ESD Protection. Antistatic Precautions Must Be Taken
- NLV Prefix for Automotive and Other Applications Requiring Unique Site and Control Change Requirements; AEC−Q100 Qualified and PPAP Capable*
- These Devices are Pb−Free and are RoHS Compliant

MAXIMUM RATINGS (Voltages Referenced to V_{SS})

Symbol	Parameter	Value	Unit
V_{DD}	DC Supply Voltage Range	−0.5 to +18.0	V
V_{in}, V_{out}	Input or Output Voltage Range (DC or Transient)	−0.5 to V_{DD} + 0.5	V
I_{in}	Input Current (DC or Transient) per Control Pin	±10	mA
I_{SW}	Switch Through Current	±25	mA
P_D	Power Dissipation, per Package (Note 1)	500	mW
T_A	Ambient Temperature Range	−55 to +125	°C
T_{stg}	Storage Temperature Range	−65 to +150	°C
T_L	Lead Temperature (8−Second Soldering)	260	°C

Stresses exceeding those listed in the Maximum Ratings table may damage the device. If any of these limits are exceeded, device functionality should not be assumed, damage may occur and reliability may be affected.

1. Temperature Derating: “D/DW” Packages: −7.0 mW/°C From 65°C To 125°C

This device contains protection circuitry to guard against damage due to high static voltages or electric fields. However, precautions must be taken to avoid applications of any voltage higher than maximum rated voltages to this high−impedance circuit. For proper operation, V_{in} and V_{out} should be constrained to the range $V_{SS} \le (V_{in}$ or $V_{out}) \le V_{DD}$.

Unused inputs must always be tied to an appropriate logic voltage level (e.g., either V_{SS} or V_{DD}). Unused outputs must be left open.



SOIC−14
D SUFFIX
CASE 751A

MARKING DIAGRAM

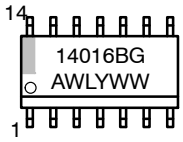

A = Assembly Location
WL = Wafer Lot
Y = Year
WW = Work Week
G = Pb−Free Indicator

ORDERING INFORMATION

Device	Package	Shipping†
MC14016BDG	SOIC−14 (Pb−Free)	55 Units / Tube
MC14016BDR2G	SOIC−14 (Pb−Free)	2500 / Tape & Reel
NLV14016BDR2G*	SOIC−14 (Pb−Free)	2500 / Tape & Reel

†For information on tape and reel specifications, including part orientation and tape sizes, please refer to our Tape and Reel Packaging Specifications Brochure, BRD8011/D.

© Semiconductor Components Industries, LLC, 2014

PIN ASSIGNMENT

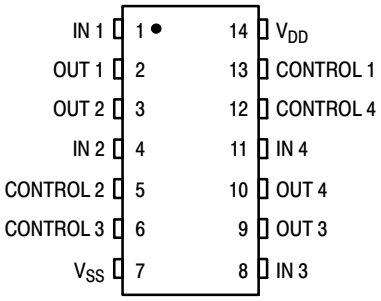

BLOCK DIAGRAM

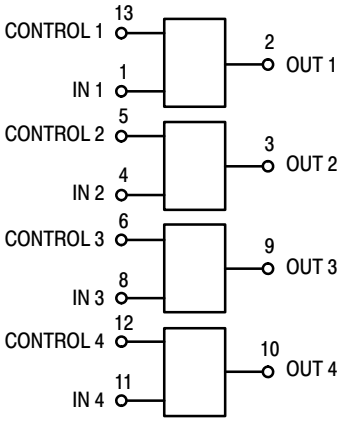

V_{DD} = PIN 14
V_{SS} = PIN 7

LOGIC DIAGRAM

(1/4 OF DEVICE SHOWN)

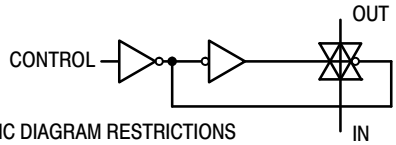

LOGIC DIAGRAM RESTRICTIONS
$V_{SS} \le V_{in} \le V_{DD}$
$V_{SS} \le V_{out} \le V_{DD}$

Control	Switch
0 = V_{SS}	Off
1 = V_{DD}	On

ELECTRICAL CHARACTERISTICS (Voltages Referenced to V_{SS})

Characteristic	Figure	Symbol	V_{DD} Vdc	−55°C Min	−55°C Max	25°C Min	25°C Typ (Note 2)	25°C Max	125°C Min	125°C Max	Unit
Input Voltage Control Input	1	V_{IL}	5.0 10 15	– – –	– – –	– – –	1.5 1.5 1.5	0.9 0.9 0.9	– – –	– – –	Vdc
		V_{IH}	5.0 10 15	– – –	– – –	3.0 8.0 13	2.0 6.0 11	– – –	– – –	– – –	Vdc
Input Current Control	–	I_{in}	15	–	±0.1	–	±0.00001	±0.1	–	±1.0	μAdc
Input Capacitance Control Switch Input Switch Output Feed Through	–	C_{in}	 – – – –	 – – – –	 – – – –	 – – – –	 5.0 5.0 5.0 0.2	 – – – –	 – – – –	 – – – –	pF
Quiescent Current (Per Package) (Note 3)	2,3	I_{DD}	5.0 10 15	– – –	0.25 0.5 1.0	– – –	0.0005 0.0010 0.0015	0.25 0.5 1.0	– – –	7.5 15 30	μAdc
"ON" Resistance ($V_C = V_{DD}$, R_L = 10 kΩ) (V_{in} = +10 Vdc) (V_{in} = +0.25 Vdc) V_{SS} = 0 Vdc (V_{in} = +5.6 Vdc) (V_{in} = +15 Vdc) (V_{in} = +0.25 Vdc) V_{SS} = 0 Vdc (V_{in} = +9.3 Vdc)	4,5,6	R_{ON}	 10 15	 – – – – –	 600 600 600 360 360 360	 – – – – –	 260 310 310 260 260 300	 660 660 660 400 400 400	 – – – – – –	 840 840 840 520 520 520	Ω
Δ "ON" Resistance Between any 2 circuits in a common package ($V_C = V_{DD}$) (V_{in} = +5.0 Vdc, V_{SS} = −5.0 Vdc) (V_{in} = +7.5 Vdc, V_{SS} = −7.5 Vdc)	–	ΔR_{ON}	 5.0 7.5	 – –	 – –	 – –	 15 10	 – –	 – –	 – –	Ω
Input/Output Leakage Current ($V_C = V_{SS}$) (V_{in} = +7.5, V_{out} = −7.5 Vdc) (V_{in} = −7.5, V_{out} = +7.5 Vdc)	–	–	 7.5 7.5	 – –	 ±0.1 ±0.1	 – –	 ±0.0015 ±0.0015	 ±0.1 ±0.1	 – –	 ±1.0 ±1.0	μAdc

Product parametric performance is indicated in the Electrical Characteristics for the listed test conditions, unless otherwise noted. Product performance may not be indicated by the Electrical Characteristics if operated under different conditions.

NOTE: All unused inputs must be returned to V_{DD} or V_{SS} as appropriate for the circuit application.

2. Data labelled "Typ" is not to be used for design purposes but is intended as an indication of the IC's potential performance.
3. For voltage drops across the switch (ΔV_{switch}) > 600 mV (> 300 mV at high temperature), excessive V_{DD} current may be drawn; i.e., the current out of the switch may contain both V_{DD} and switch input components. The reliability of the device will be unaffected unless the Maximum Ratings are exceeded. (See first page of this data sheet.) Reference Figure 14.

ELECTRICAL CHARACTERISTICS (Note 4) (C_L = 50 pF, T_A = 25°C)

Characteristic	Figure	Symbol	V_{DD} Vdc	Min	Typ (Note 5)	Max	Unit
Propagation Delay Time (V_{SS} = 0 Vdc) V_{in} to V_{out} (V_C = V_{DD}, R_L = 10 kΩ)	7	t_{PLH}, t_{PHL}	5.0 10 15	– – –	15 7.0 6.0	45 20 15	ns
Control to Output (V_{in} ≤ 10 Vdc, R_L = 10 kΩ)	8	t_{PHZ}, t_{PLZ}, t_{PZH}, t_{PZL}	 5.0 10 15	 – – –	 34 20 15	 120 110 100	ns
Crosstalk, Control to Output (V_{SS} = 0 Vdc) (V_C = V_{DD}, R_{in} = 10 kΩ, R_{out} = 10 kΩ, f = 1.0 kHz)	9	–	5.0 10 15	– – –	30 50 100	– – –	mV
Crosstalk between any two switches (V_{SS} = 0 Vdc) (R_L = 1.0 kΩ, f = 1.0 MHz, crosstalk = $20\log_{10}\frac{V_{out1}}{V_{out2}}$)	–	–	5.0	–	– 80	–	dB
Noise Voltage (V_{SS} = 0 Vdc) (V_C = V_{DD}, f = 100 Hz) (V_C = V_{DD}, f = 100 kHz)	10,11	–	5.0 10 15 5.0 10 15	– – – – – –	24 25 30 12 12 15	– – – – – –	nV/$\sqrt{\text{Cycle}}$
Second Harmonic Distortion (V_{SS} = – 5.0 Vdc) (V_{in} = 1.77 Vdc, RMS Centered @ 0.0 Vdc, R_L = 10 kΩ, f = 1.0 kHz)	–	–	5.0	–	0.16	–	%
Insertion Loss (V_C = V_{DD}, V_{in} = 1.77 Vdc, V_{SS} = –5.0 Vdc, RMS centered = 0.0 Vdc, f = 1.0 MHz) I_{loss} = $20\log_{10}\frac{V_{out}}{V_{in}}$) ($R_L$ = 1.0 kΩ) (R_L = 10 kΩ) (R_L = 100 kΩ) (R_L = 1.0 MΩ)	12	–	5.0	 – – – –	 2.3 0.2 0.1 0.05	 – – – –	dB
Bandwidth (–3.0 dB) (V_C = V_{DD}, V_{in} = 1.77 Vdc, V_{SS} = –5.0 Vdc, RMS centered @ 0.0 Vdc) (R_L = 1.0 kΩ) (R_L = 10 kΩ) (R_L = 100 kΩ) (R_L = 1.0 MΩ)	12,13	BW	5.0	 – – – –	 54 40 38 37	 – – – –	MHz
OFF Channel Feedthrough Attenuation (V_{SS} = –5.0 Vdc) (V_C = V_{SS}, 20 $\log_{10}\frac{V_{out}}{V_{in}}$ = –50 dB) (R_L = 1.0 kΩ) (R_L = 10 kΩ) (R_L = 100 kΩ) (R_L = 1.0 MΩ)	–	–	5.0	 – – – –	 1250 140 18 2.0	 – – – –	kHz

4. The formulas given are for typical characteristics only at 25°C.
5. Data labelled “Typ” is not to be used for design purposes but is intended as an indication of the IC’s potential performance.

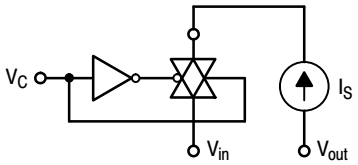

V_{IL}: V_C is raised from V_{SS} until $V_C = V_{IL}$.
at $V_C = V_{IL}$: $I_S = \pm 10$ μA with $V_{in} = V_{SS}$, $V_{out} = V_{DD}$ or $V_{in} = V_{DD}$, $V_{out} = V_{SS}$.

V_{IH}: When $V_C = V_{IH}$ to V_{DD}, the switch is ON and the R_{ON} specifications are met.

Figure 1. Input Voltage Test Circuit

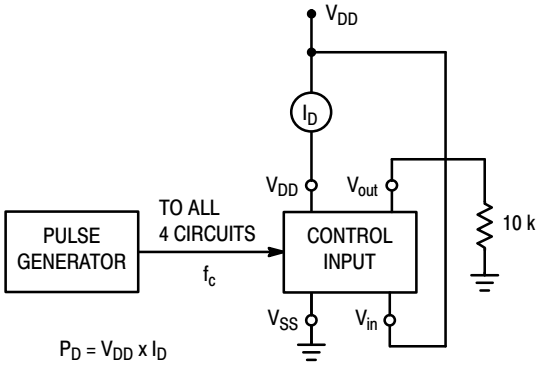

Figure 2. Quiescent Power Dissipation Test Circuit

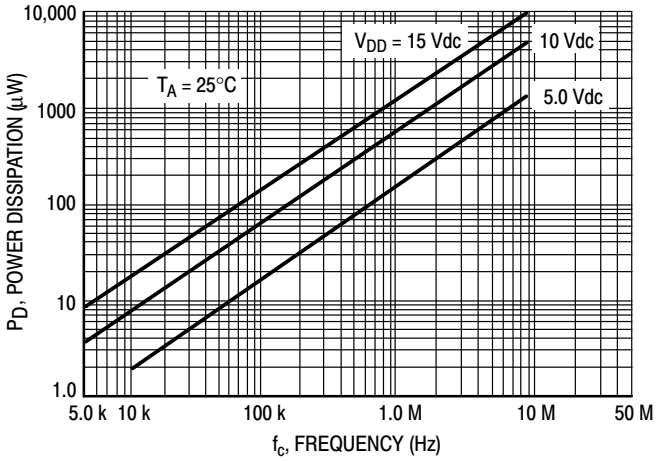

Figure 3. Typical Power Dissipation per Circuit (1/4 of device shown)

TYPICAL R_{ON} VERSUS INPUT VOLTAGE

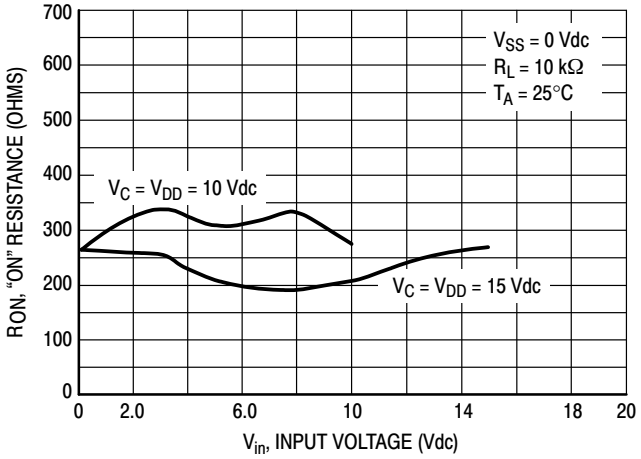

Figure 4. V_{SS} = 0 V

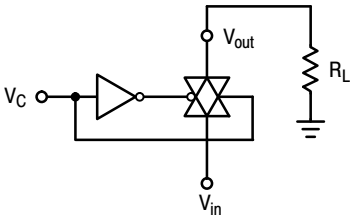

Figure 5. R_{ON} Characteristics Test Circuit

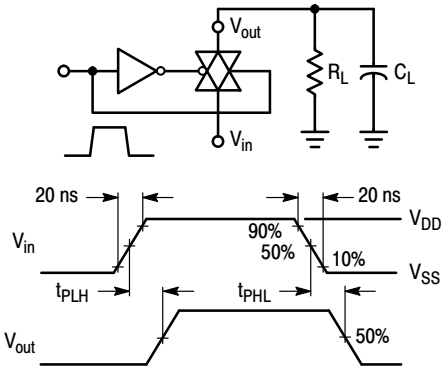

Figure 6. Propagation Delay Test Circuit and Waveforms

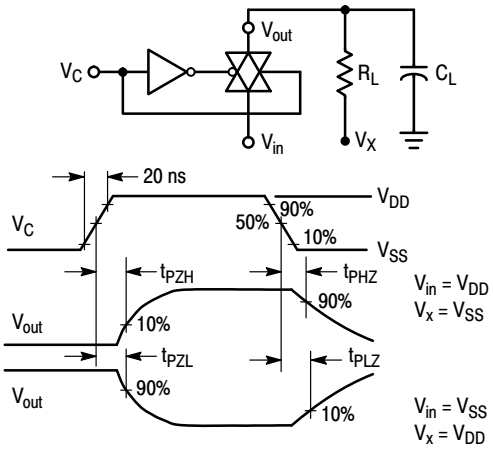

Figure 7. Turn−On Delay Time Test Circuit and Waveforms

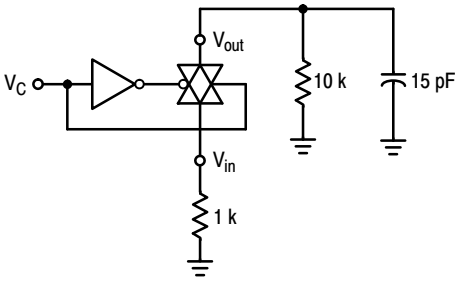

Figure 8. Crosstalk Test Circuit

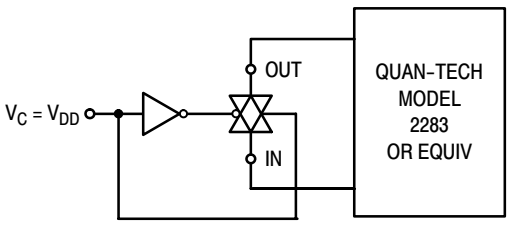

Figure 9. Noise Voltage Test Circuit

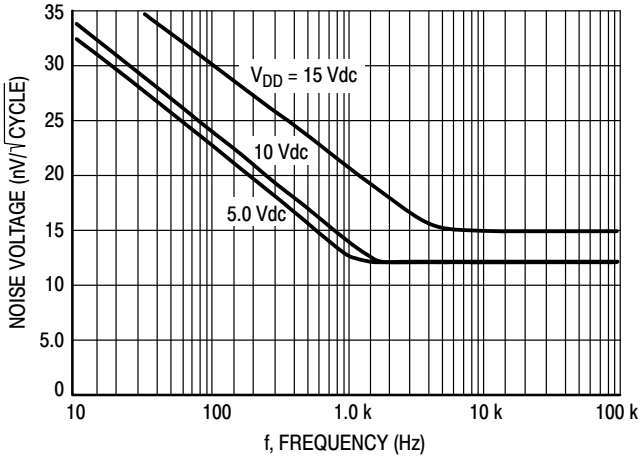

Figure 10. Typical Noise Characteristics

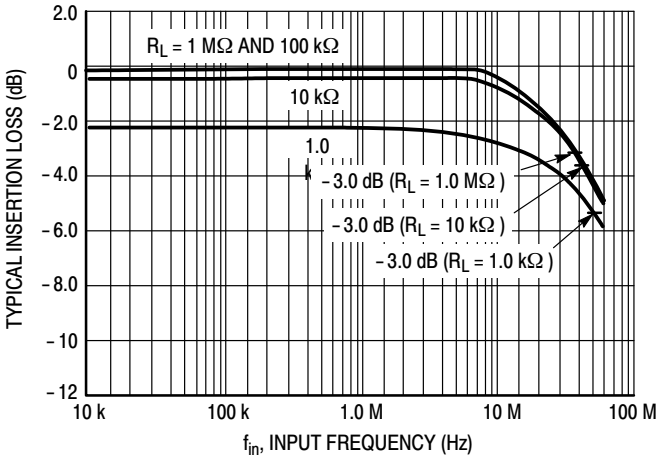

Figure 11. Typical Insertion Loss/Bandwidth Characteristics

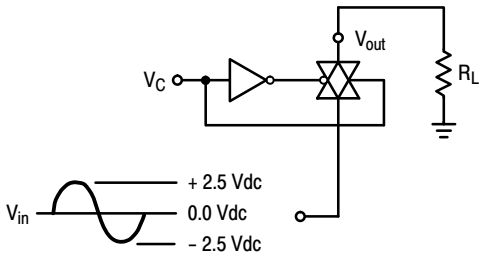

Figure 12. Frequency Response Test Circuit

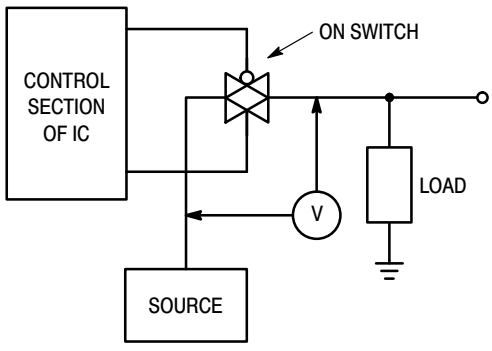

Figure 13. ΔV Across Switch

APPLICATIONS INFORMATION

Figure A illustrates use of the Analog Switch. The 0–to–5 V Digital Control signal is used to directly control a 5 V_{p-p} analog signal.

The digital control logic levels are determined by V_{DD} and V_{SS}. The V_{DD} voltage is the logic high voltage; the V_{SS} voltage is logic low. For the example, V_{DD} = +5 V logic high at the control inputs; V_{SS} = GND = 0 V logic low.

The maximum analog signal level is determined by V_{DD} and V_{SS}. The analog voltage must not swing higher than V_{DD} or lower than V_{SS}.

The example shows a 5 V_{p-p} signal which allows no margin at either peak. If voltage transients above V_{DD} and/or below V_{SS} are anticipated on the analog channels, external diodes (D_x) are recommended as shown in Figure B. These diodes should be small signal types able to absorb the maximum anticipated current surges during clipping.

The *absolute* maximum potential difference between V_{DD} and V_{SS} is 18.0 V. Most parameters are specified up to 15 V which is the *recommended* maximum difference between V_{DD} and V_{SS}.

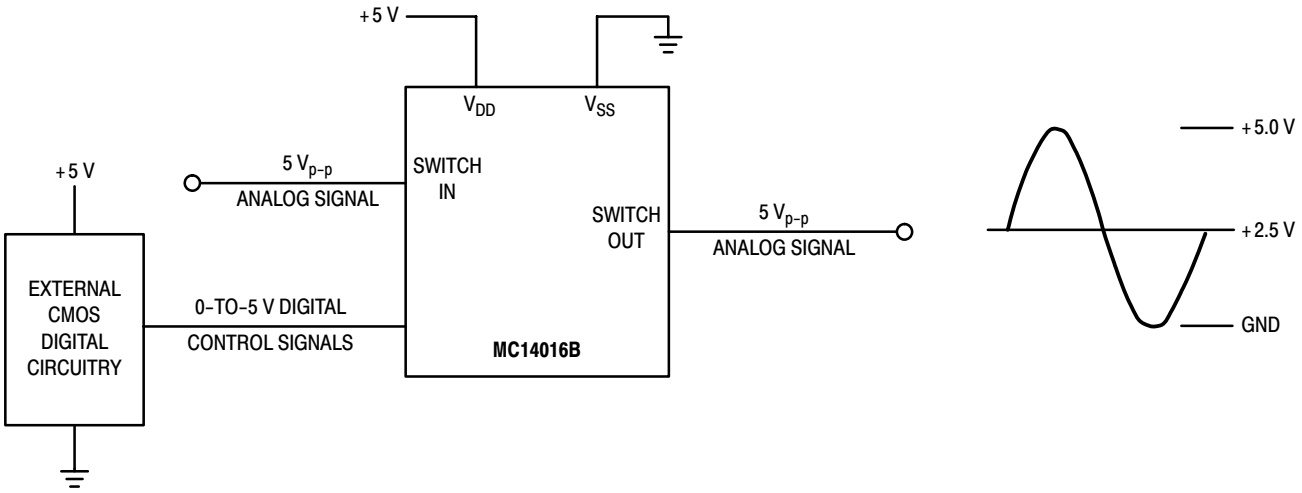

Figure A. Application Example

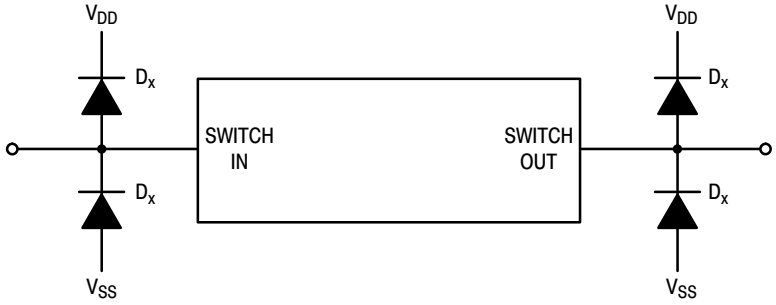

Figure B. External Germanium or Schottky Clipping Diodes

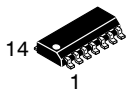

SCALE 1:1

SOIC−14 NB
CASE 751A−03
ISSUE L

DATE 03 FEB 2016

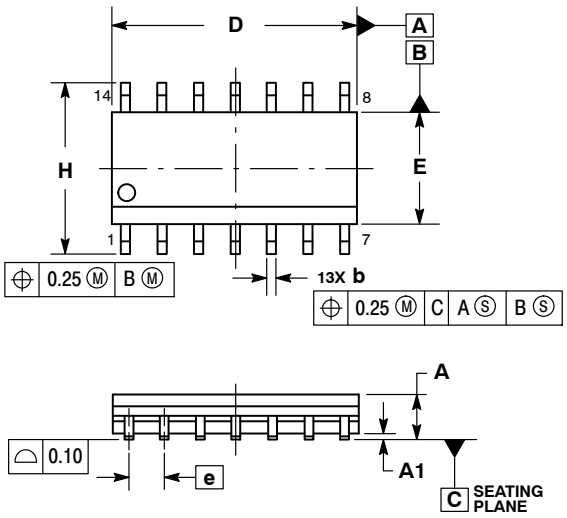

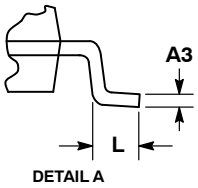

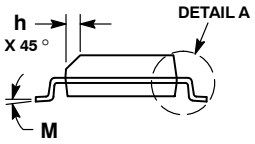

NOTES:
1. DIMENSIONING AND TOLERANCING PER ASME Y14.5M, 1994.
2. CONTROLLING DIMENSION: MILLIMETERS.
3. DIMENSION b DOES NOT INCLUDE DAMBAR PROTRUSION. ALLOWABLE PROTRUSION SHALL BE 0.13 TOTAL IN EXCESS OF AT MAXIMUM MATERIAL CONDITION.
4. DIMENSIONS D AND E DO NOT INCLUDE MOLD PROTRUSIONS.
5. MAXIMUM MOLD PROTRUSION 0.15 PER SIDE.

	MILLIMETERS		INCHES	
DIM	MIN	MAX	MIN	MAX
A	1.35	1.75	0.054	0.068
A1	0.10	0.25	0.004	0.010
A3	0.19	0.25	0.008	0.010
b	0.35	0.49	0.014	0.019
D	8.55	8.75	0.337	0.344
E	3.80	4.00	0.150	0.157
e	1.27 BSC		0.050 BSC	
H	5.80	6.20	0.228	0.244
h	0.25	0.50	0.010	0.019
L	0.40	1.25	0.016	0.049
M	0 °	7 °	0 °	7 °

SOLDERING FOOTPRINT*

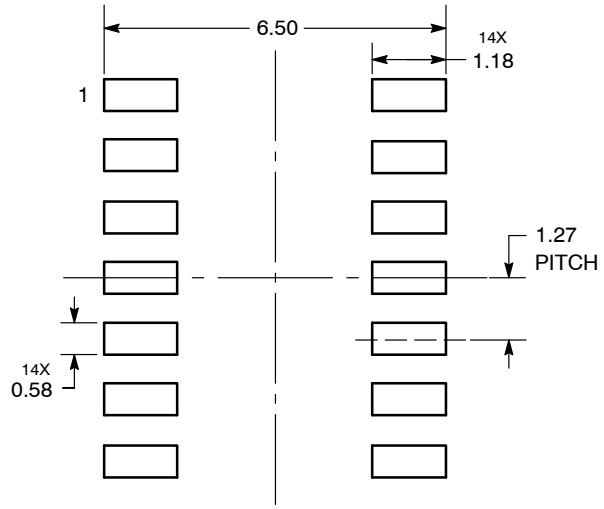

DIMENSIONS: MILLIMETERS

*For additional information on our Pb−Free strategy and soldering details, please download the **onsemi** Soldering and Mounting Techniques Reference Manual, SOLDERRM/D.

GENERIC MARKING DIAGRAM*

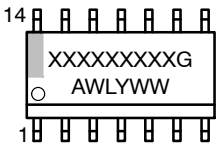

XXXXX = Specific Device Code
A = Assembly Location
WL = Wafer Lot
Y = Year
WW = Work Week
G = Pb−Free Package

*This information is generic. Please refer to device data sheet for actual part marking. Pb−Free indicator, “G” or microdot “▪”, may or may not be present. Some products may not follow the Generic Marking.

STYLES ON PAGE 2

DOCUMENT NUMBER:	**98ASB42565B**	Electronic versions are uncontrolled except when accessed directly from the Document Repository. Printed versions are uncontrolled except when stamped “CONTROLLED COPY” in red.	
DESCRIPTION:	**SOIC−14 NB**		**PAGE 1 OF 2**

onsemi and onsemi are trademarks of Semiconductor Components Industries, LLC dba **onsemi** or its subsidiaries in the United States and/or other countries. **onsemi** reserves the right to make changes without further notice to any products herein. **onsemi** makes no warranty, representation or guarantee regarding the suitability of its products for any particular purpose, nor does **onsemi** assume any liability arising out of the application or use of any product or circuit, and specifically disclaims any and all liability, including without limitation special, consequential or incidental damages. **onsemi** does not convey any license under its patent rights nor the rights of others.

SOIC−14
CASE 751A−03
ISSUE L

DATE 03 FEB 2016

STYLE 1:
PIN 1. COMMON CATHODE
2. ANODE/CATHODE
3. ANODE/CATHODE
4. NO CONNECTION
5. ANODE/CATHODE
6. NO CONNECTION
7. ANODE/CATHODE
8. ANODE/CATHODE
9. ANODE/CATHODE
10. NO CONNECTION
11. ANODE/CATHODE
12. ANODE/CATHODE
13. NO CONNECTION
14. COMMON ANODE

STYLE 2:
CANCELLED

STYLE 3:
PIN 1. NO CONNECTION
2. ANODE
3. ANODE
4. NO CONNECTION
5. ANODE
6. NO CONNECTION
7. ANODE
8. ANODE
9. ANODE
10. NO CONNECTION
11. ANODE
12. ANODE
13. NO CONNECTION
14. COMMON CATHODE

STYLE 4:
PIN 1. NO CONNECTION
2. CATHODE
3. CATHODE
4. NO CONNECTION
5. CATHODE
6. NO CONNECTION
7. CATHODE
8. CATHODE
9. CATHODE
10. NO CONNECTION
11. CATHODE
12. CATHODE
13. NO CONNECTION
14. COMMON ANODE

STYLE 5:
PIN 1. COMMON CATHODE
2. ANODE/CATHODE
3. ANODE/CATHODE
4. ANODE/CATHODE
5. ANODE/CATHODE
6. NO CONNECTION
7. COMMON ANODE
8. COMMON CATHODE
9. ANODE/CATHODE
10. ANODE/CATHODE
11. ANODE/CATHODE
12. ANODE/CATHODE
13. NO CONNECTION
14. COMMON ANODE

STYLE 6:
PIN 1. CATHODE
2. CATHODE
3. CATHODE
4. CATHODE
5. CATHODE
6. CATHODE
7. CATHODE
8. ANODE
9. ANODE
10. ANODE
11. ANODE
12. ANODE
13. ANODE
14. ANODE

STYLE 7:
PIN 1. ANODE/CATHODE
2. COMMON ANODE
3. COMMON CATHODE
4. ANODE/CATHODE
5. ANODE/CATHODE
6. ANODE/CATHODE
7. ANODE/CATHODE
8. ANODE/CATHODE
9. ANODE/CATHODE
10. ANODE/CATHODE
11. COMMON CATHODE
12. COMMON ANODE
13. ANODE/CATHODE
14. ANODE/CATHODE

STYLE 8:
PIN 1. COMMON CATHODE
2. ANODE/CATHODE
3. ANODE/CATHODE
4. NO CONNECTION
5. ANODE/CATHODE
6. ANODE/CATHODE
7. COMMON ANODE
8. COMMON ANODE
9. ANODE/CATHODE
10. ANODE/CATHODE
11. NO CONNECTION
12. ANODE/CATHODE
13. ANODE/CATHODE
14. COMMON CATHODE

onsemi and ONSEMI are trademarks of Semiconductor Components Industries, LLC dba **onsemi** or its subsidiaries in the United States and/or other countries. **onsemi** reserves the right to make changes without further notice to any products herein. **onsemi** makes no warranty, representation or guarantee regarding the suitability of its products for any particular purpose, nor does **onsemi** assume any liability arising out of the application or use of any product or circuit, and specifically disclaims any and all liability, including without limitation special, consequential or incidental damages. **onsemi** does not convey any license under its patent rights nor the rights of others.

© Semiconductor Components Industries, LLC, 2019

onsemi, , and other names, marks, and brands are registered and/or common law trademarks of Semiconductor Components Industries, LLC dba "**onsemi**" or its affiliates and/or subsidiaries in the United States and/or other countries. **onsemi** owns the rights to a number of patents, trademarks, copyrights, trade secrets, and other intellectual property. A listing of **onsemi**'s product/patent coverage may be accessed at www.onsemi.com/site/pdf/Patent−Marking.pdf. **onsemi** reserves the right to make changes at any time to any products or information herein, without notice. The information herein is provided "as−is" and **onsemi** makes no warranty, representation or guarantee regarding the accuracy of the information, product features, availability, functionality, or suitability of its products for any particular purpose, nor does **onsemi** assume any liability arising out of the application or use of any product or circuit, and specifically disclaims any and all liability, including without limitation special, consequential or incidental damages. Buyer is responsible for its products and applications using **onsemi** products, including compliance with all laws, regulations and safety requirements or standards, regardless of any support or applications information provided by **onsemi**. "Typical" parameters which may be provided in **onsemi** data sheets and/or specifications can and do vary in different applications and actual performance may vary over time. All operating parameters, including "Typicals" must be validated for each customer application by customer's technical experts. **onsemi** does not convey any license under any of its intellectual property rights nor the rights of others. **onsemi** products are not designed, intended, or authorized for use as a critical component in life support systems or any FDA Class 3 medical devices or medical devices with a same or similar classification in a foreign jurisdiction or any devices intended for implantation in the human body. Should Buyer purchase or use **onsemi** products for any such unintended or unauthorized application, Buyer shall indemnify and hold **onsemi** and its officers, employees, subsidiaries, affiliates, and distributors harmless against all claims, costs, damages, and expenses, and reasonable attorney fees arising out of, directly or indirectly, any claim of personal injury or death associated with such unintended or unauthorized use, even if such claim alleges that **onsemi** was negligent regarding the design or manufacture of the part. **onsemi** is an Equal Opportunity/Affirmative Action Employer. This literature is subject to all applicable copyright laws and is not for resale in any manner.

ADDITIONAL INFORMATION

TECHNICAL PUBLICATIONS:
Technical Library: www.onsemi.com/design/resources/technical−documentation
onsemi Website: www.onsemi.com

ONLINE SUPPORT: www.onsemi.com/support
For additional information, please contact your local Sales Representative at www.onsemi.com/support/sales