SERIES: VFM-50 | **DESCRIPTION:** DC POWER LINE FILTER

FEATURES

- compact
- high efficiency 98%
- meet IEC/EN61000-4 standard
- CISPR22/EN55022 compliant
- DIP, Chassis and DIN Rail mounting version
- input voltage protection



RoHS

SPECIFICATIONS

parameter	conditions/description	min	typ	max	units
input voltage		18	24	36	Vdc
output power				50	W
no load input current	at 24 Vdc			5	mA
efficiency	at 24 Vdc, full load		98		%
isolation voltage	+Vin to GND, -Vin to GND, at 1 minute and leakage current 5 mA max			500	Vac
conducted emissions	CISPR22/EN55022, 150 kHz ~ 30 MHz class B				
radiated emissions	CISPR22/EN55022, 30 MHz ~ 1 GHz class B				
ESD	IEC/EN61000-4-2, air ±8 kV, contact ± 6kV, class B				
radiated immunity	IEC/EN61000-4-3, 10 V/m, class A				
EFT/burst	IEC/EN61000-4-4, ±4 kV(5 kHz, 100 kHz), class B				
surge	IEC/EN61000-4-5, ±2 kV (1.2μs/50μs 2Ω)/±4 kV (1.2 μs/50 μs 12 Ω), class B				
conducted immunity	IEC/EN61000-4-6, 10 Vr.m.s, class A				
MTBF	as per MIL-HDBK-217F, 40°C		1,000,000		hours
RoHS	yes				
operating temperature		-40		85	°C
storage temperature		-55		125	°C
storage humidity	non-condensing	5		95	%

Notes: 1. All specifications are measured at Ta=25°C, humidity < 75%, nominal input voltage, and rated load, unless otherwise specified.

PART NUMBER KEY

VFM-50 - X

Base Number

Mounting Style:
D = board mount
T = chassis mount
DIN = DIN-rail mount

Please read our datasheet & drawing disclaimer here.

SOLDERABILITY[2]

parameter	conditions/description	min	typ	max	units
hand soldering	for 3~5 seconds	350	360	370	°C
wave soldering	see wave soldering profile			260	°C

Note: 2. For board mount models only.

WAVE SOLDERING PROFILE

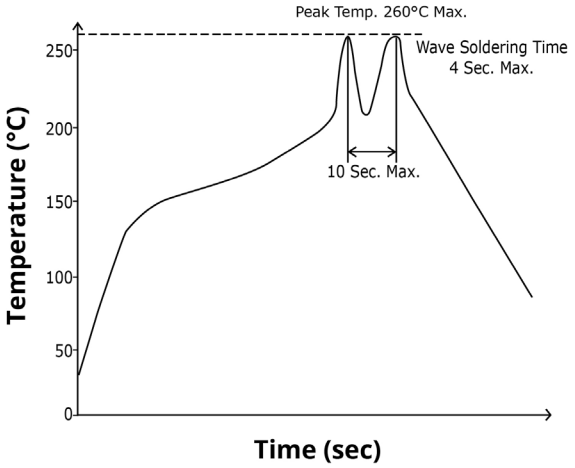

MECHANICAL

parameter	conditions/description	min	typ	max	units
dimensions	board mount: 53.80 x 28.80 x 19.00 [2.118 x 1.134 x 0.748 inch]				mm
	chassis mount: 76.00 x 31.50 x 27.80 [2.992 x 1.240 x 1.094 inch]				mm
	DIN-Rail mount: 76.00 x 31.50 x 32.40 [2.992 x 1.240 x 1.276 inch]				mm
case material	black flame-retardant heat-proof epoxy resin (UL94V-0)				
weight	board mount		50		g
	chassis mount		70		g
	DIN-rail mount		90		g

MECHANICAL DRAWING (BOARD MOUNT)

units: mm [inch]
tolerance: ±0.50[±0.020]
pin diameter tolerance: ±0.10[±0.004]

PIN CONNECTIONS	
PIN	Function
1	GND
2	-Vin
3	+Vin
4	+Vout
5	-Vout

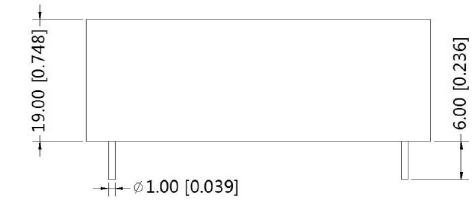

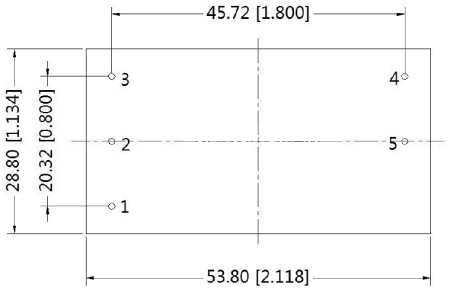

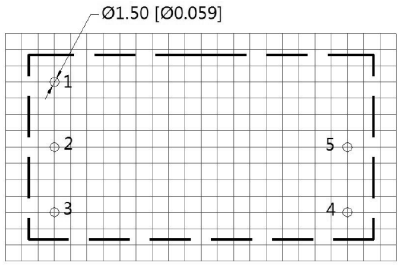

Note : Grid 2.54*2.54mm
Recommended PCB Layout
Top View

MECHANICAL DRAWING (CHASSIS MOUNT)

units: mm [inch]
tolerance: ±0.50[±0.020]

wire range: 24~12 AWG
tightening torgue: 0.4 N*m max

PIN CONNECTIONS	
PIN	Function
1	GND
2	-Vin
3	+Vin
4	+Vout
5	-Vout

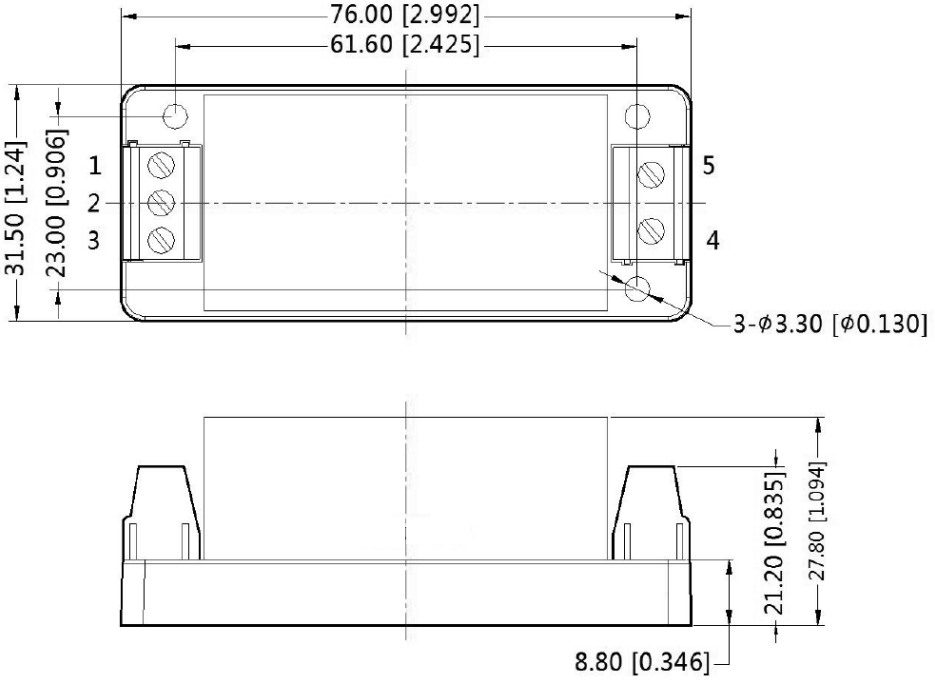

MECHANICAL DRAWING (DIN-RAIL MOUNT)

units: mm [inch]
tolerance: ±0.50[±0.020]

installed on DIN rail TS35
wire range: 24~12 AWG
tightening torgue: 0.4 N*m max

PIN CONNECTIONS	
PIN	Function
1	GND
2	-Vin
3	+Vin
4	+Vout
5	-Vout

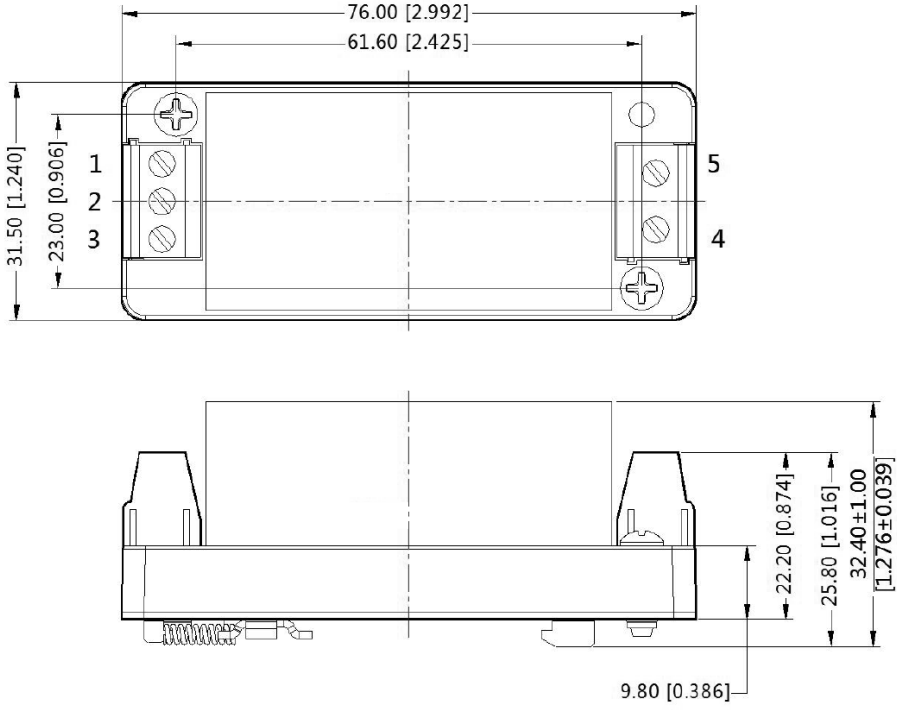

APPLICATION CIRCUIT

Figure 1
Application Circuit

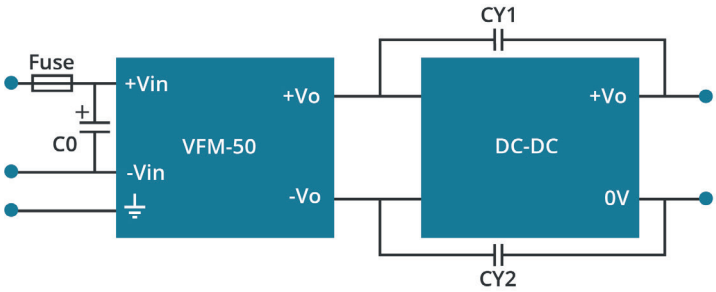

Recommended External Circuit Components	
FUSE	choose according to power module datasheet
C0	400 µF / 200 V, electrolytic
CY1, CY2	1 nF / 2 kV

Figure 2
Non-supported Application for Module

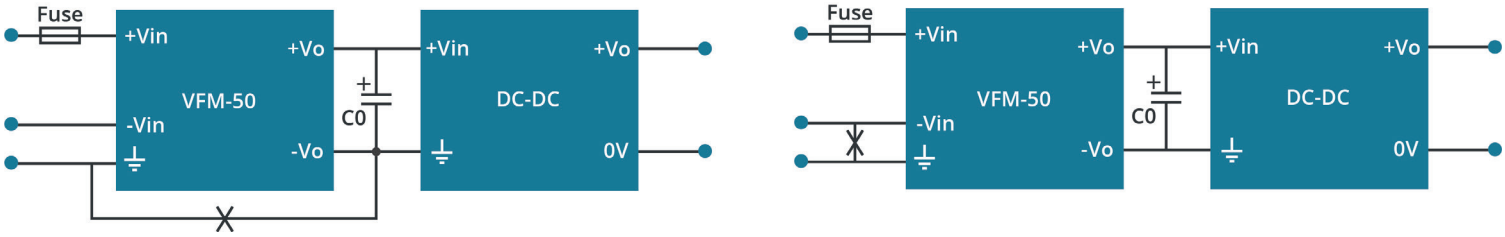

REVISION HISTORY

rev.	description	date
1.0	initial release	12/17/2018
1.01	circuit figures updated, packaging removed	01/25/2022

The revision history provided is for informational purposes only and is believed to be accurate.

CUI INC
a bel group

Headquarters
20050 SW 112th Ave.
Tualatin, OR 97062
800.275.4899

Fax 503.612.2383
cui.com
techsupport@cui.com

CUI offers a two (2) year limited warranty. Complete warranty information is listed on our website.

CUI reserves the right to make changes to the product at any time without notice. Information provided by CUI is believed to be accurate and reliable. However, no responsibility is assumed by CUI for its use, nor for any infringements of patents or other rights of third parties which may result from its use.

CUI products are not authorized or warranted for use as critical components in equipment that requires an extremely high level of reliability. A critical component is any component of a life support device or system whose failure to perform can be reasonably expected to cause the failure of the life support device or system, or to affect its safety or effectiveness.