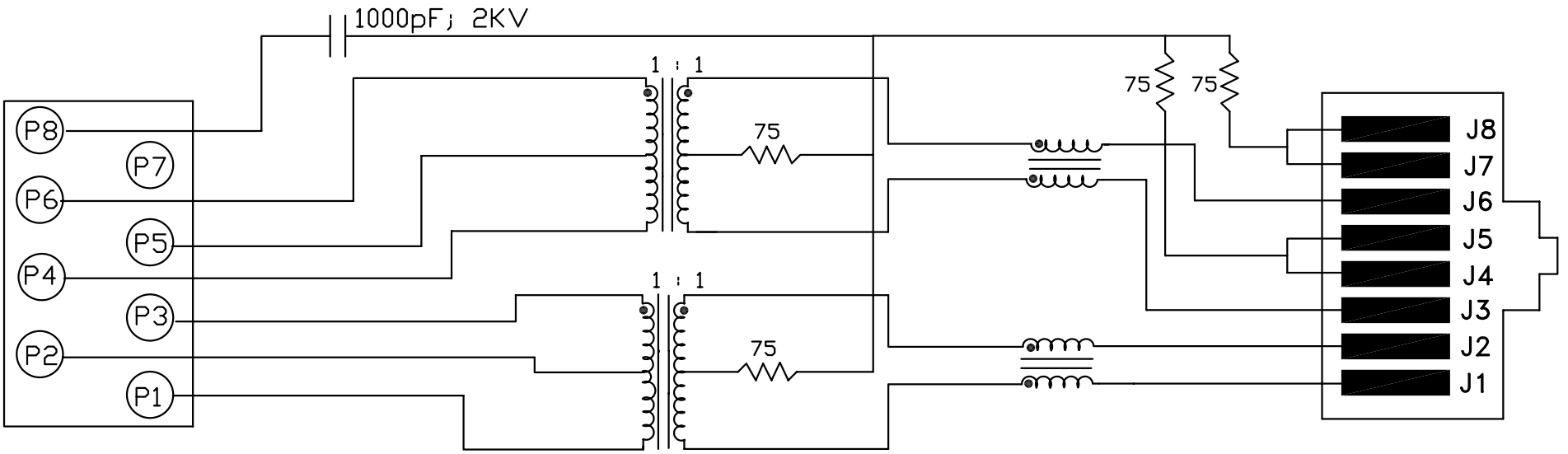

ELECTRICAL SPECIFICATIONS:

OPERATING TEMPERATURE RANGE:	: −40°C TO +85°C
1.0 TURNS RATIO: (P6−P5−P4) : (J6−J3)	: 1CT : 1CT± 3%
(P3−P2−P1) : (J2−J1)	: 1CT : 1CT ± 3%
2.0 INDUCTANCE: (P6−P4)	: 350uH MIN. @ 0.1V, 100KHz, 8mA DC Bias
(P3−P1)	: 350uH MIN. @ 0.1V, 100KHz, 8mA DC Bias
3.0 LEAKAGE INDUCTANCE: P6−P4 (WITH J6 AND J3 SHORT)	: 0.3 MAX. @ 1MHz
P3−P1 (WITH J2 AND J1 SHORT)	: 0.3 MAX. @ 1MHz
4.0 INTERWINDING CAPACITANCE: (P6,P5,P4) TO (J6,J3)	: 40pf MAX @ 1MHz
(P3,P2,P1) TO (J2,J1)	: 40pf MAX. @ 1MHZ
5.0 DC RESISTANCE: (J6−J3)=(J2−J1)	: 1.2 ohms Max.

NOTES

1.0 PINS WITHOUT ELECTRICAL CONNECTION ARE OMITTED.

RoHS 2002/95/EC

Bel Stewart Connector
11118 Susquehanna Trail, South
Glen Rock, Pa 17327-9199
717.234.7512

MagJack®

http://www.stewartconnector.com

THIS DRAWING AND THE SUBJECT MATTER SHOWN THEREON ARE CONFIDENTIAL AND PROPERTY OF BEL STEWART CONNECTOR AND SHALL NOT BE REPRODUCED, COPIED, OR USED IN ANY MANNER WITHOUT PRIOR WRITTEN CONTENT OF BEL STEWART CONNECTOR. THE SUBJECT MATTER MAY BE PATENTED OR A PATENT MAY BE PENDING.
Please read our datasheet & drawing disclaimer here.

RECEIVE

6.0 RETURN LOSS: (P6–P4)=100 OHMS AND (P1–P3)=100 OHM REF.

1MHz TO 30MHz	:	18dB MIN.
60MHz TO 80MHz	:	12dB MIN.

NOTE: 100 OHMS CONNECTED TO (J2–J1) OR (J6–J3).

7.0 DIELECTRIC WITHSTAND: (J1, J2) TO (P1, P3)	:	1500 VAC
(J3, J6) TO (P4,P6)	:	1500 VAC
8.0 INSERTION LOSS: RS=RL=100 ohms		
100KHz TO 100MHz	:	1.1 dB TYP
9.0 RISE TIME: RS=100 OHMS AND RL = 100 OHMS		
OUTPUT VOLTAGE = 1 V peak	:	3.0 nS MAX
PULSE WIDTH= 112nS	:	3.0 nS MAX
10.0 CROSS TALK: 1MHz TO 100MHz	:	40 dB TYP
11.0 COMMON TO COMMON MODE ATTENUATION: 30MHz TO 100MHz	:	35dB TYP

Bel Stewart Connector
11118 Susquehanna Trail, South
Glen Rock, Pa 17327-9199
717.234.7512

MagJack®

http://www.stewartconnector.com

THIS DRAWING AND THE SUBJECT MATTER SHOWN THEREON ARE CONFIDENTIAL AND PROPERTY OF BEL STEWART CONNECTOR AND SHALL NOT BE REPRODUCED, COPIED, OR USED IN ANY MANNER WITHOUT PRIOR WRITTEN CONTENT OF BEL STEWART CONNECTOR. THE SUBJECT MATTER MAY BE PATENTED OR A PATENT MAY BE PENDING.

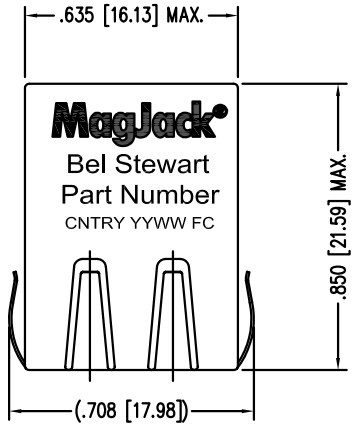

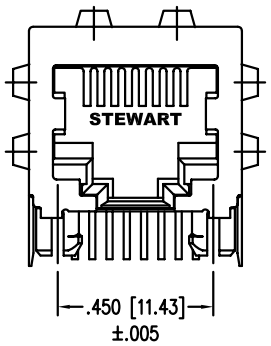

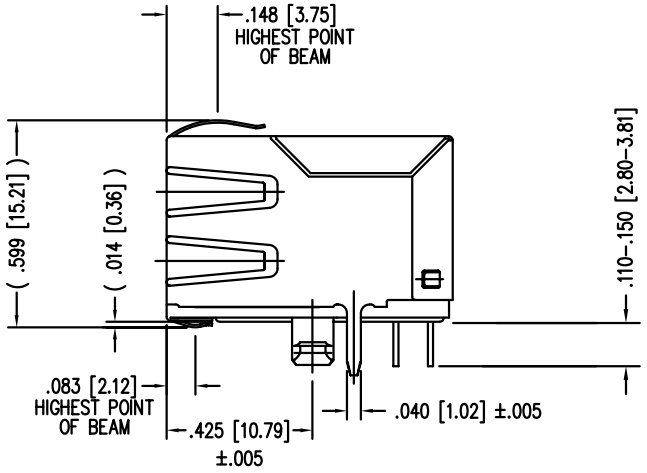

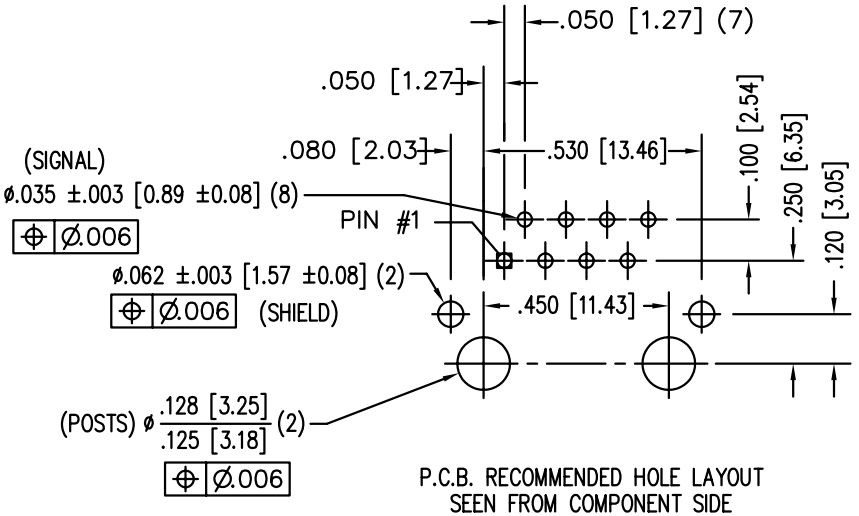

P.C.B. RECOMMENDED HOLE LAYOUT
SEEN FROM COMPONENT SIDE

ALL CENTERLINE DIMENSIONS ARE BASIC.

RoHS 2002/95/EC

NOTES:

1. CONNECTOR MATERIALS:
   HOUSING: THERMOPLASTIC UL94 V-0
   CONTACT/SHIELD: COPPER ALLOY
   SHIELD PLATING: NICKEL OR TIN
   CONTACT PLATING: SELECTIVE GOLD,
   50 MICRO-INCHES MIN. IN CONTACT AREA.
2. PIN NOT ELECTRICALLY CONNECTED MAYBE OMITTED.
   SEE ELECTRICAL DRAWING FOR OMITTED PINS.
3. TOLERANCES COMPLY WITH F.C.C. DIMENSION REQUIREMENTS.
4. ALL TOLERANCES NOT OTHERWISE SPECIFIED TO BE ±.005 [0.13]
5. WAVE SOLDER COMPATIBLE – PREHEAT 125°C/90SECS.

Bel Stewart Connector
11118 Susquehanna Trail, South
Glen Rock, Pa 17327-9199
717.234.7512
MagJack
http://www.stewartconnector.com

THIS DRAWING AND THE SUBJECT MATTER SHOWN THEREON ARE CONFIDENTIAL AND PROPERTY OF BEL STEWART CONNECTOR AND SHALL NOT BE REPRODUCED, COPIED, OR USED IN ANY MANNER WITHOUT PRIOR WRITTEN CONTENT OF BEL STEWART CONNECTOR. THE SUBJECT MATTER MAY BE PATENTED OR A PATENT MAY BE PENDING.

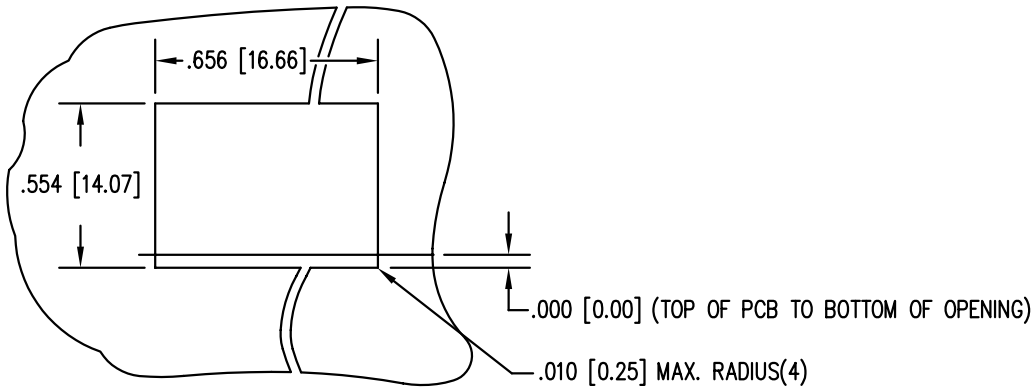

SUGGESTED PANEL OPENING

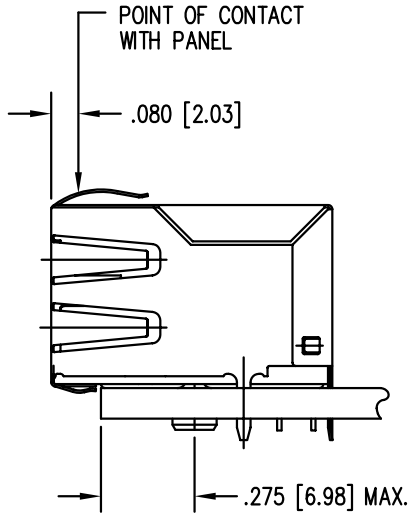

1. THE SUGGESTED PANEL OPENING IS INTENDED TO GIVE THE USER THE ABILITY TO HAVE REASONABLE JACK / PANEL CLEARANCES YET MAINTAIN RELIABLE GROUNDING CAPABILITY.
2. ALL TOLERANCES NOT OTHERWISE SPECIFIED TO BE ±.005 [0.13]

Bel Stewart Connector
11118 Susquehanna Trail, South
Glen Rock, Pa 17327-9199
717.234.7512
http://www.stewartconnector.com

MagJack®

THIS DRAWING AND THE SUBJECT MATTER SHOWN THEREON ARE CONFIDENTIAL AND PROPERTY OF BEL STEWART CONNECTOR AND SHALL NOT BE REPRODUCED, COPIED, OR USED IN ANY MANNER WITHOUT PRIOR WRITTEN CONTENT OF BEL STEWART CONNECTOR. THE SUBJECT MATTER MAY BE PATENTED OR A PATENT MAY BE PENDING.