Package Information : SSOP-B16

1. Package Information

Package Name	SSOP-B16
Type	SOP
Pin Count	16
Package Weight [g]	0.08
Lead Finish	Pure Tin
MSL	Level1

2. Package Structure

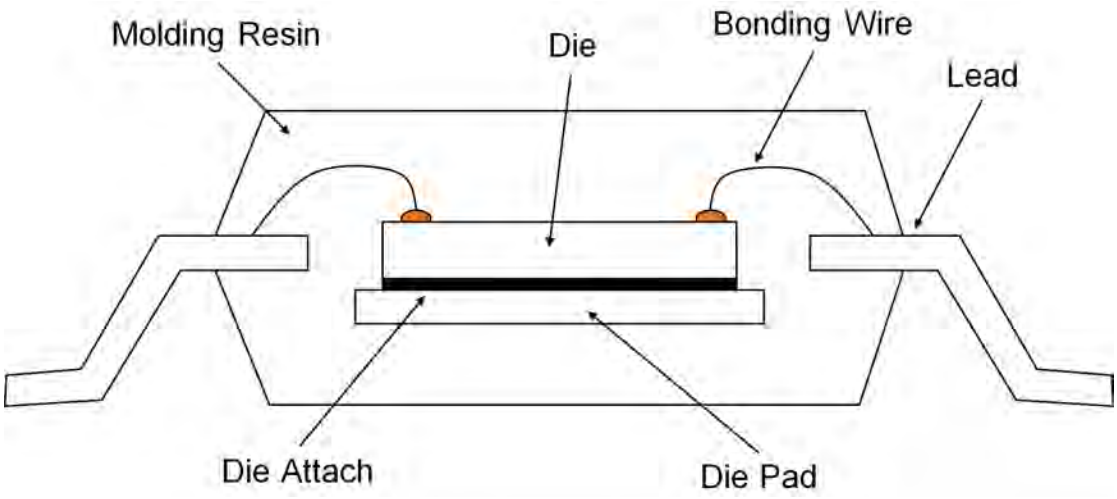

©2016 ROHM Co., Ltd. All rights reserved

3. Packing Specification

3.1 Packing form, Quantity, PIN1 Orientation

Packing Form		Tape&Reel
Packing Quantity	[pcs]	2,500
PIN 1 Orientation		E2

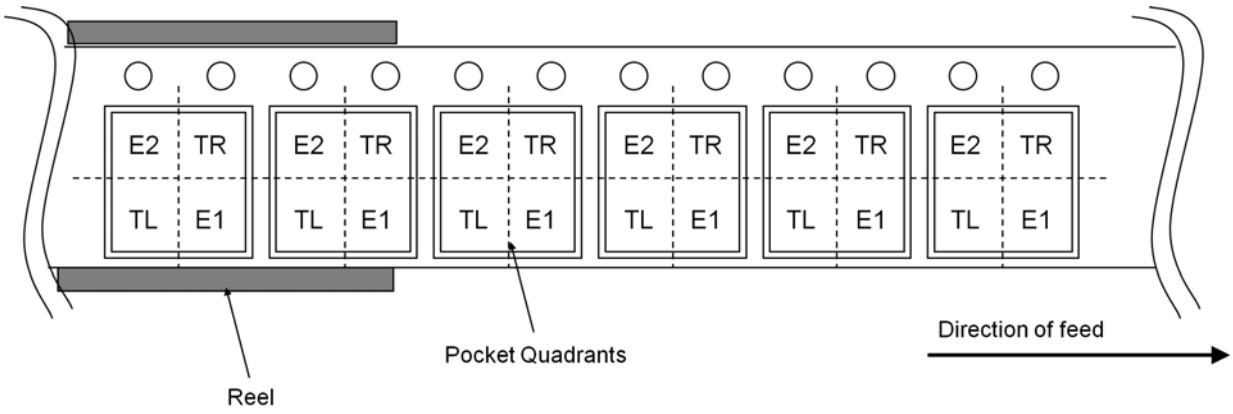

Fig.1 Quadrant Assignments for PIN 1 Orientation in Tape

E2 : PIN1 is placed to the top left corner. TR : PIN1 is placed to the top right corner.

TL : PIN1 is placed to the lower left. E1 : PIN1 is placed to the lower right.

Fig.1 PIN 1 Orientation in Tape

3.2 Use material

Item	Material
Embossed carrier tape	PS
Cover tape	PET+PE
Reel	PS
Air cap	PE
Unit box	Cardboard
Shipping box	Cardboard

3.3 Leader specification

No component pockets are 320 mm or more.

3.4 Trailer specification

No component pockets are 80 mm or more. Tape is free from reel.

3.5 Peelback strength

Cover tape peelback strength is 0.2 N to 0.7 N.

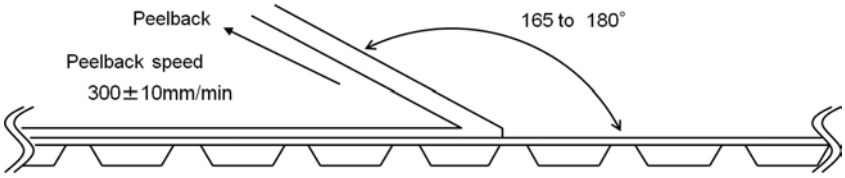

Fig. 2 Test method

3.6 Missing Ics

(1) No consecutive dropouts.

(2) A maximun 0.1 % of specified number of products in each packing may be missing.

©2016 ROHM Co., Ltd. All rights reserved

3.7 Tape and Reel Specification

3.7.1 Tape Dimension

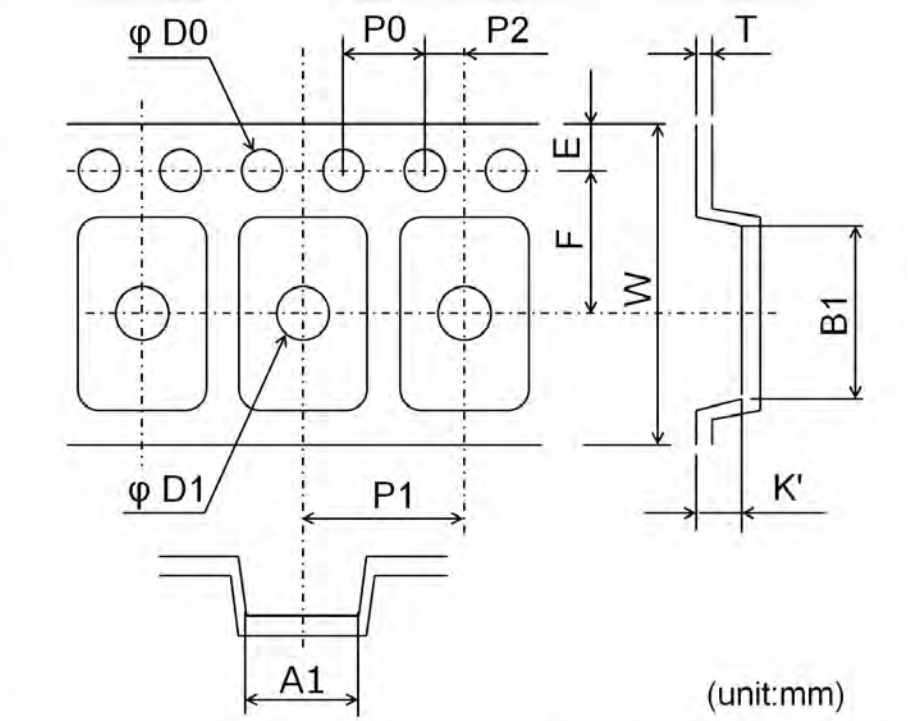

	Tape Dimension	Tape Tolerance
A1	6.95	±0.1
B1	5.40	±0.1
D0	φ1.5	±0.1
D1	φ1.5	MIN
E	1.75	±0.1
F	5.50	±0.1
K'	1.95	±0.1
P0	4.00	±0.1
P1	8.00	±0.1
P2	2.00	±0.1
T	0.30	-
W	12.0	±0.3

©2016 ROHM Co., Ltd. All rights reserved

3.7.2 Reel Dimension

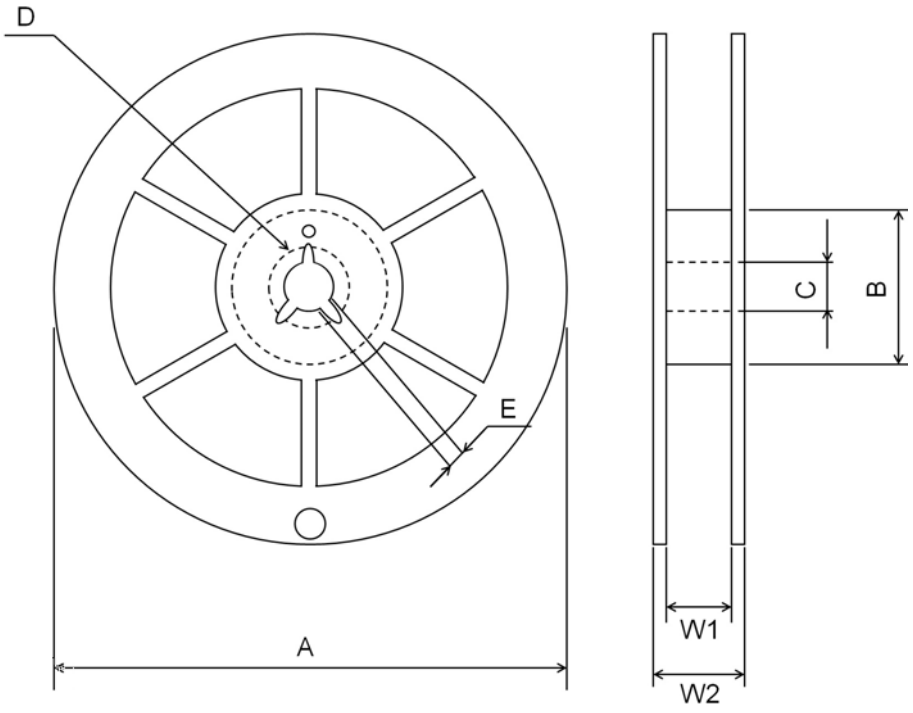

(unit:mm)

	Reel Dimension	Reel Tolerance
A	330	±2.0
B	80	±1.0
C	13	±0.2
D	21	±0.8
E	2	±0.5
W1	13.5	±1.0
W2	17.5	±1.0

©2016 ROHM Co., Ltd. All rights reserved

3.8 Packing Method

1 reel(s) or less per unit box

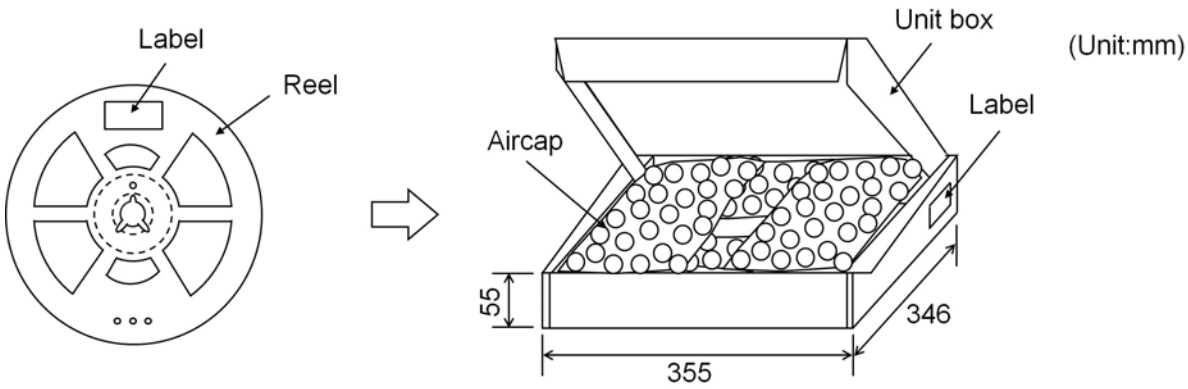

3.9 Packing Style

5 unit boxes or less per shipping box

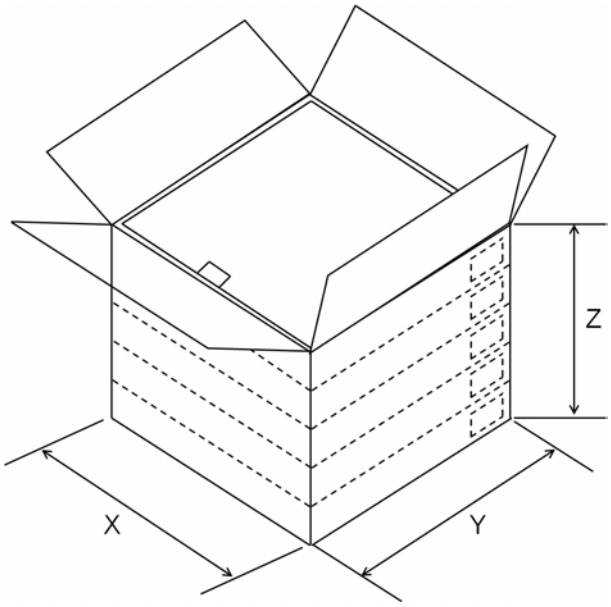

(unit:mm)

Shipping Box Dimension	
X	372
Y	368
Z	305

3.10 Label Specification



Label Example

©2016 ROHM Co., Ltd. All rights reserved

4. Footprint dimensions

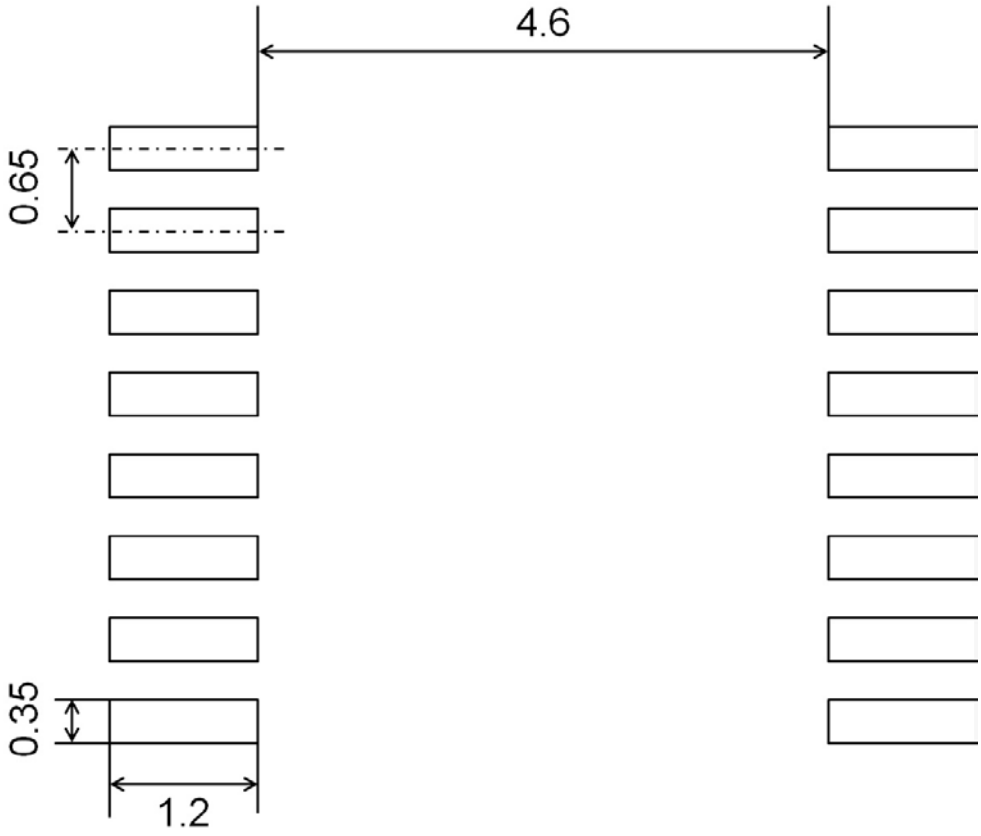

(unit:mm)

In actual design, please optimize in accordance with the situation of your board design and soldering condition.

©2016 ROHM Co., Ltd. All rights reserved

5. Marking Specification

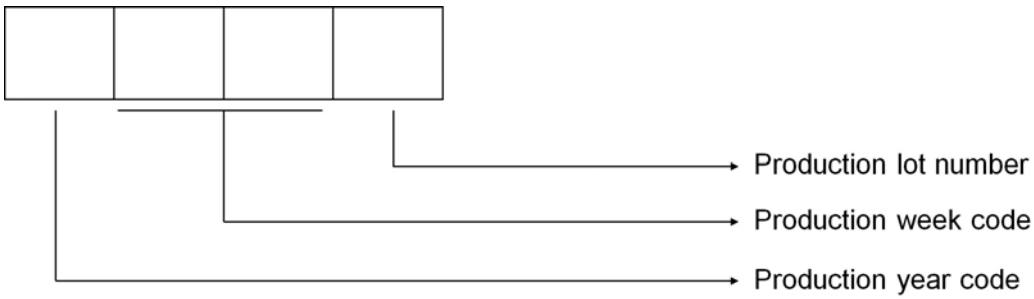

6. Storage conditions

6.1 Storage environment

Recommended storage conditions

	Min.	Max.	Unit
Temperature	5	30	°C
Humidity	-	85	% RH

6.2 Storage period (Start to count since delivery date)

	Min.	Max.	Unit
Storage period	-	1	year

6.3 Drying process

Dryprocess is not required before solder mounting.

©2016 ROHM Co., Ltd. All rights reserved

7. Soldering conditions

7.1 Recommended temperature profile for reflow

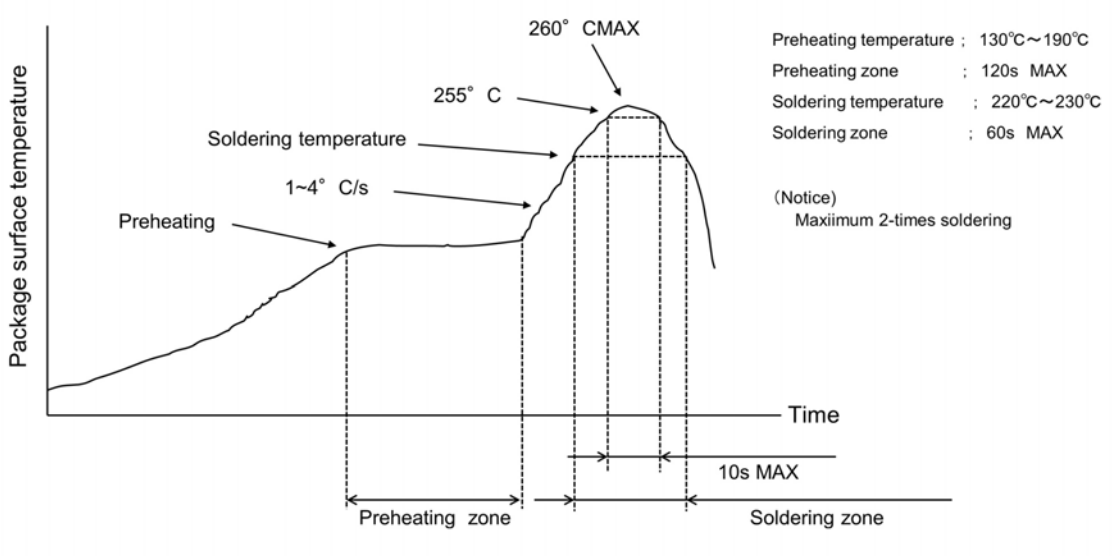

7.2 Recommended condition for wave soldering

Preheating temperature	:	120 °C to 150 °C
Preheating time	:	60 s MAX
Soldering temperature	:	260 °C ± 3 °C
Soldering time	:	12 s MAX

Notes for wave soldering

(1)Soldering time is provided for total soldering time in case of dual wave soldering.

(2) Do not use other soldering methods with wave soldering.

(3) Recommend to clean the board to eliminate flux, solder waste,
and other impurities for reliability, after soldering.

(4) Optimize soldering condition to prevent solder bridging.

7.3 Recommended condition for solder iron

Solder iron temperature	:	380 °C or less
Mounting time	:	4 s or less

Notes for solder iron

(1)Solder mounting time is the time per 1 lead

©2016 ROHM Co., Ltd. All rights reserved

Notes

1) The information contained herein is subject to change without notice.

2) Before you use our Products, please contact our sales representative and verify the latest specifications :

3) Although ROHM is continuously working to improve product reliability and quality, semiconductors can break down and malfunction due to various factors.
Therefore, in order to prevent personal injury or fire arising from failure, please take safety measures such as complying with the derating characteristics, implementing redundant and fire prevention designs, and utilizing backups and fail-safe procedures. ROHM shall have no responsibility for any damages arising out of the use of our Poducts beyond the rating specified by ROHM.

4) Examples of application circuits, circuit constants and any other information contained herein are provided only to illustrate the standard usage and operations of the Products. The peripheral conditions must be taken into account when designing circuits for mass production.

5) The technical information specified herein is intended only to show the typical functions of and examples of application circuits for the Products. ROHM does not grant you, explicitly or implicitly, any license to use or exercise intellectual property or other rights held by ROHM or any other parties. ROHM shall have no responsibility whatsoever for any dispute arising out of the use of such technical information.

6) The Products are intended for use in general electronic equipment (i.e. AV/OA devices, communication, consumer systems, gaming/entertainment sets) as well as the applications indicated in this document.

7) The Products specified in this document are not designed to be radiation tolerant.

8) For use of our Products in applications requiring a high degree of reliability (as exemplified below), please contact and consult with a ROHM representative : transportation equipment (i.e. cars, ships, trains), primary communication equipment, traffic lights, fire/crime prevention, safety equipment, medical systems, servers, solar cells, and power transmission systems.

9) Do not use our Products in applications requiring extremely high reliability, such as aerospace equipment, nuclear power control systems, and submarine repeaters.

10) ROHM shall have no responsibility for any damages or injury arising from non-compliance with the recommended usage conditions and specifications contained herein.

11) ROHM has used reasonable care to ensur the accuracy of the information contained in this document. However, ROHM does not warrants that such information is error-free, and ROHM shall have no responsibility for any damages arising from any inaccuracy or misprint of such information.

12) Please use the Products in accordance with any applicable environmental laws and regulations, such as the RoHS Directive. For more details, including RoHS compatibility, please contact a ROHM sales office. ROHM shall have no responsibility for any damages or losses resulting non-compliance with any applicable laws or regulations.

13) When providing our Products and technologies contained in this document to other countries, you must abide by the procedures and provisions stipulated in all applicable export laws and regulations, including without limitation the US Export Administration Regulations and the Foreign Exchange and Foreign Trade Act.

14) This document, in part or in whole, may not be reprinted or reproduced without prior consent of ROHM.

ROHM SEMICONDUCTOR

Thank you for your accessing to ROHM product informations.
More detail product informations and catalogs are available, please contact us.

ROHM Customer Support System

http://www.rohm.com/contact/

© 2015 ROHM Co., Ltd. All rights reserved.