Power EMC Filters

2- line filter for high voltage DC inverters

Series/Type: **CarXield**
Ordering code: **B84252B0400A000**

Date: January 2025

© TDK Electronics AG 2025. Reproduction, publication and dissemination of this publication, enclosures hereto and the information contained therein without TDK Electronics' prior express consent is prohibited.

Rated voltage V_R: 1000 V
Rated current I_R: 400 A

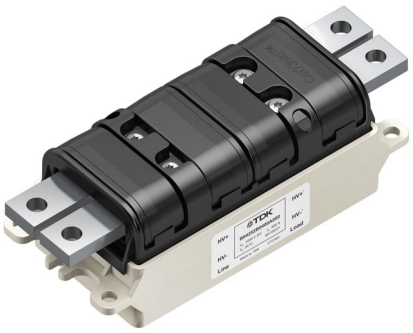

Construction

- Metal case / plastic cover
- Build with nanocrystalline cores

Features

- Validated products
- Y2 capacitors used
- Passive discharge circuit
- Easy and fast to install
- Compact design
- Severe ambient conditions
- Compatible to RoHS, REACH and GADSL
- Case flammability class V-0 according to UL 94

Applications

- EMI noise reduction
- Commercial and passenger electrical vehicles
- Different topologies (HEV, PHEV, BEV, FCEV)
  - Motor inverter
  - Battery

Terminals

- Material: Cu
- Busbars with tin plating
- Passivated busbars available on request

Marking

- Marking on component:
  Manufacturer's logo, ordering code, rated voltage,
  rated current, rated temperature, climatic category, date code
- Minimum data on packaging:
  Manufacturer's logo, ordering code, quantity, date code

Delivery mode

- Packaging material is not ESD protected
- Minimum packing unit is 9 pieces

EMC filter temperature limitation

Thermal evaluation sample available on request.

Maximum capacitor temperature	T_{CAP}	≤ 105 °C
Maximum core temperature[1)]	T_{CORE}	≤ 125 °C
Maximum plastic part temperature	$T_{PLASTIC}$	≤ 130 °C

1) The temperature monitoring of the common mode core is recommended.

Customer system limitations

Common mode (CM) current[2)]	I_{CM}	≤ 1 A peak at 10 kHz
dV/dt voltage transient on the filter L to GND	dV/dt	≤ 900 V/µs

2) Exceeding of limit allowed as long as the thermal limitations as specified in section “EMC filter temperature limitation” will not be exceeded.

Typical circuit diagram

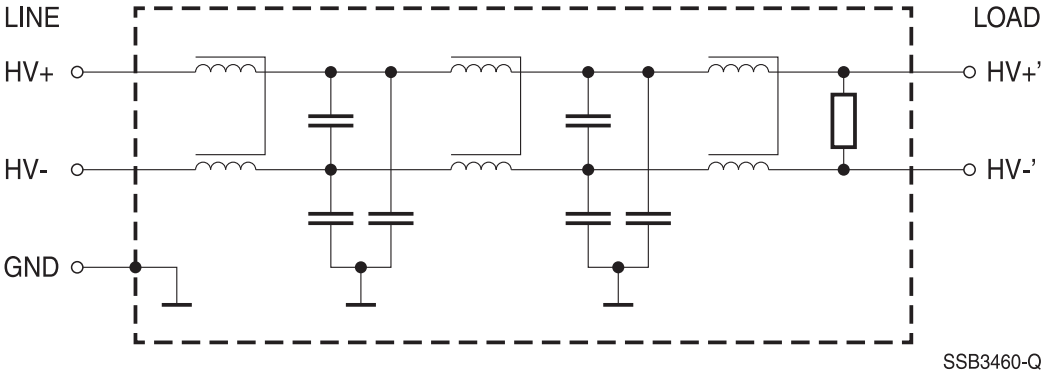

Technical data and measuring condition

Rated voltage	$V_{R\ (L\text{-}GND\ /\ L\text{-}L)}$	1000 V DC
Rated current	I_R	Referred to rated temperature
Test voltage line to line for 2 s[1)]	V_{test}	2000 V DC
Test voltage line to case for 2 s[1)]	V_{test}	3850 V DC
Rated temperature	T_R	+85 °C
Ambient temperature range[2)]	T_A	–40 … +85 °C
Storage temperature range mounted[3)]	$T_{stg\ mounted}$	–40 … +105 °C
Storage condition packed[4)]	$T_{stg\ packed}$	–25 … +40°C, max. 75% R.H.
Typical energy potential[5)]	$E_{(L\text{-}GND)}$	≤ 0.042 J
Passive discharge time[6)]	t_d	≤ 5 s
Class of capacitors (IEC 60384-14:2017)		Y2
Climatic category (IEC 60068-1:2013)		40/085/21
Degree of protection (IEC 60529:2015)		IP 00

1) Test voltage rise 500 V/s, test voltage 2 sec dwell time, test voltage fall 500 V/s.
2) The ambient temperature in the application may be increased if the thermal limitations as specified in section “EMC filter temperature limitation” will not be exceeded.
3) Only valid when build into the final application.
4) For storage outside the final application, transport and storage conditions described in the actual EMC filter data book are valid.
5) The potential calculation based on the rated voltage as specified above. It is valid for one potential (one line) to GND. The energy potential is calculated using following formula: $E = ½ \times C_{L\text{-}GND} \times V_R^2$ (result ≤ specified value).
6) Lowering of the DC HV voltage V_R within specified time below 60 V DC (voltage class B).

Characteristics and ordering code

I_R [1)] A DC	I_{peak} A DC	I_{peak} time lapse	Terminal cross section [2) 3)] mm^2	Typical DC resistance R_{typ} mΩ	Approx. filter weight g	Ordering code
400	650, 1 min	Fig. 1	96 (16 × 6)	0.1	≤ 780	B84252B0400A000
	1000, 10 s	Fig. 2				

1) Thermal current, steady state, referred to rated temperature. The current in the application may be increased in case that the thermal limitations, as specified in section “EMC filter temperature limitation”, will not be exceeded.
2) Larger or smaller cross section is feasible on request.
3) The rated and peak current refers to specified cross section.

Fig.1: Permissible time lapse for peak current 650 A DC

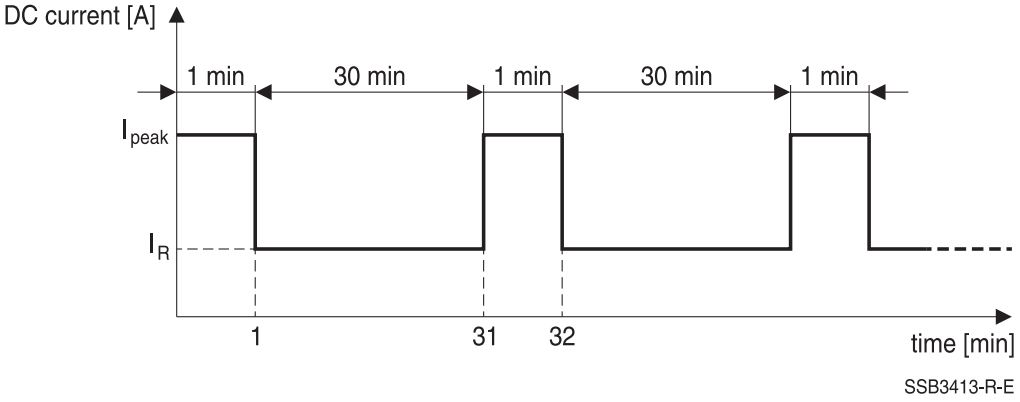

Fig 2: Permissible time lapse for peak current 1000 A DC

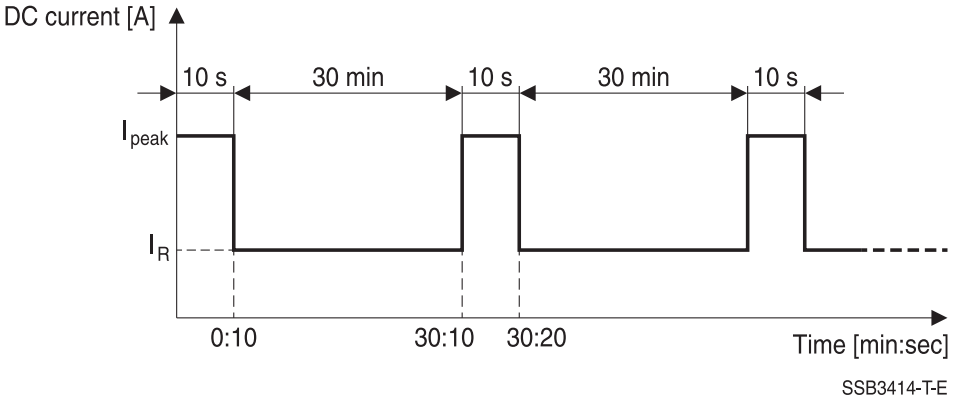

Dimensional drawings

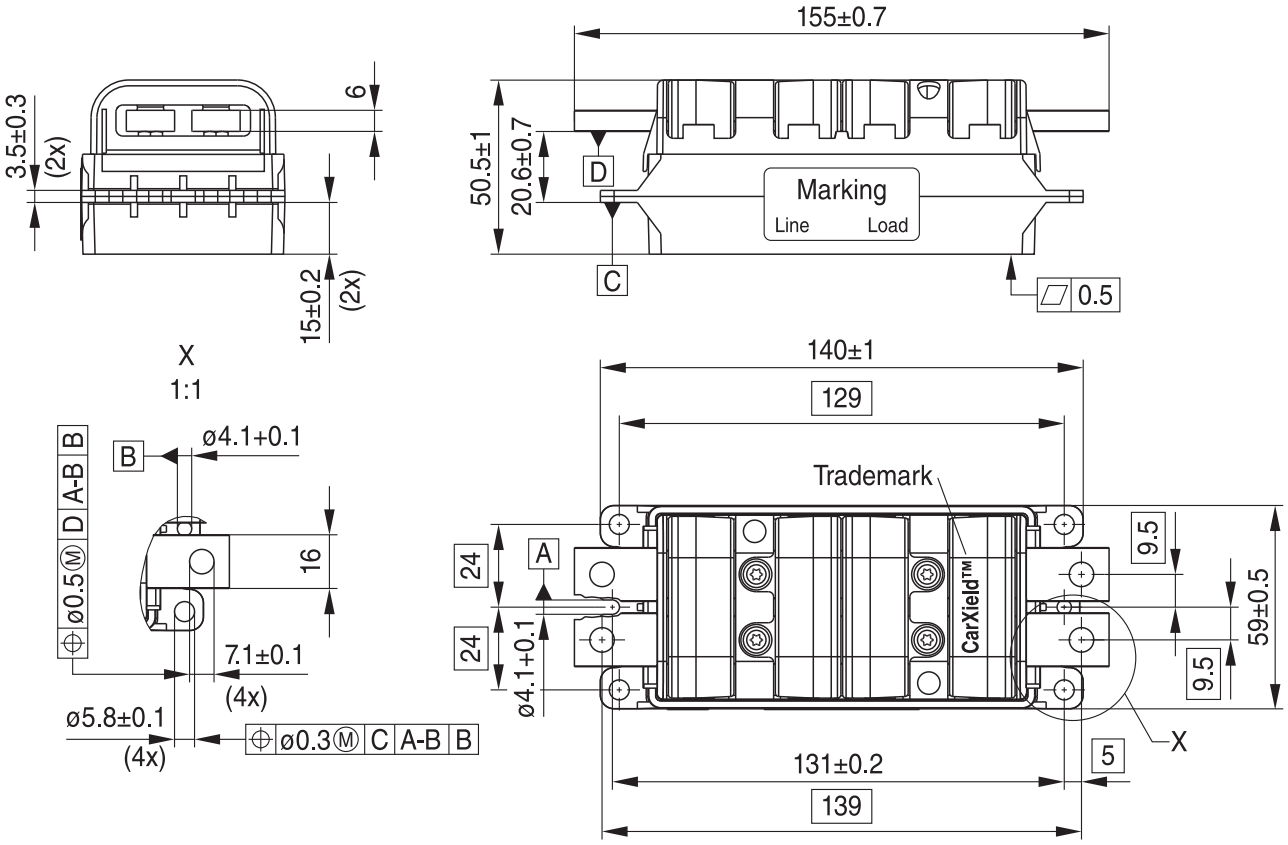

The datum “C” is the combined zone of the 2 pcs. fixing lugs (bottom surfaces).
The datum “D” is the combined zone of the 2 pcs. bus bars (bottom surfaces).

General tolerances according to ISO 2768-cL
Dimensions in mm

SSB3421-G-E

Insertion loss

Typical values at Z = 50 Ω, 23 °C ± 5 °C

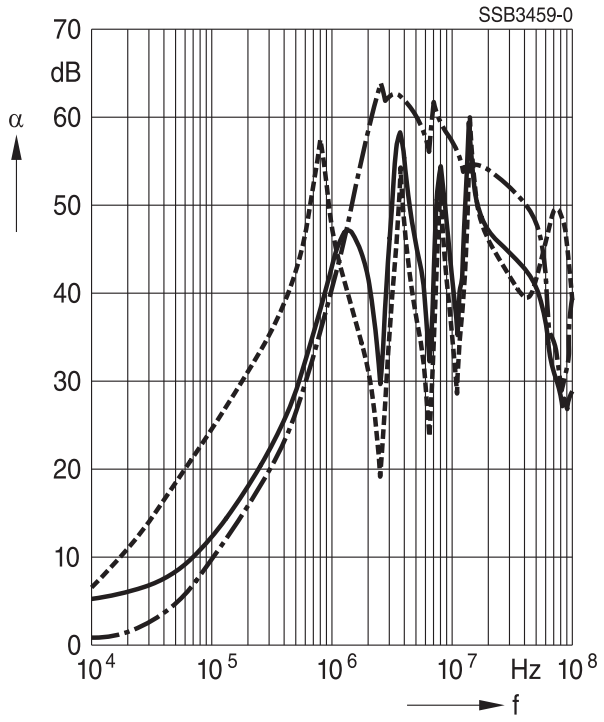

——— unsymmetrical, adjacent branches terminated

– • – • – common mode, all branches in parallel (asymmetrical)

- - - - - - differential mode (symmetrical)

Connection

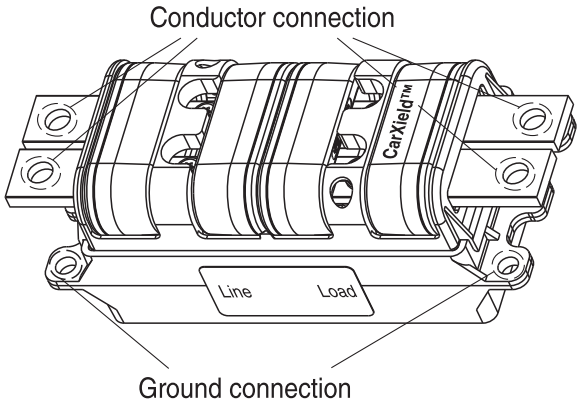

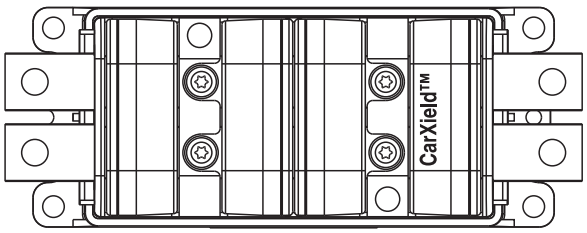

SSB3463-R-E

Interface connection

The ends of the busbar for the conductor connection are flexible according to the typical axial displacement-force diagram with specified 16 × 6 mm bus bar.

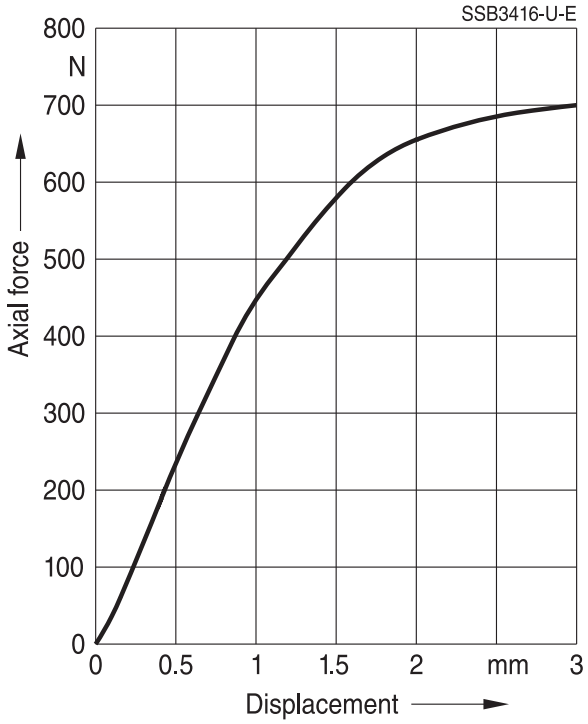

In order not to destroy and overload screw connections the busbar displacement is to be limited to 1 mm over the whole busbar length. Therefore, the load onto the busbar over connected cables or busbar is to be limited. By axial force below of 445 N the busbar flexion is still in the linear range of the copper behaviour.

EMC zone concept (inverter application)

The appropriate application of the EMC filter product requests a basic EMC understanding, an appropriate earth and shielding concept and the application of an EMC zone concept Z3 ... Z0.

Z3 Shielded EMC filter zone.

Z2 It is recommended that zone Z2 incorporate at least a minimum capacitor value of C_{gi} = 68 nF. In combination with a damping resistor R_{gi}, the losses of the resistor shall be considered.

Z1 The inverter bridge zone.
PWM frequency shall be chosen to not exceed the limitation as specified in section “EMC filter temperature limitation” and “Customer system limitations”.

Z0 A common mode choke with serial impedance Zs ≥ 25 Ohm @ 1 MHz is recommended to reduce the asymmetrical current (CM current).

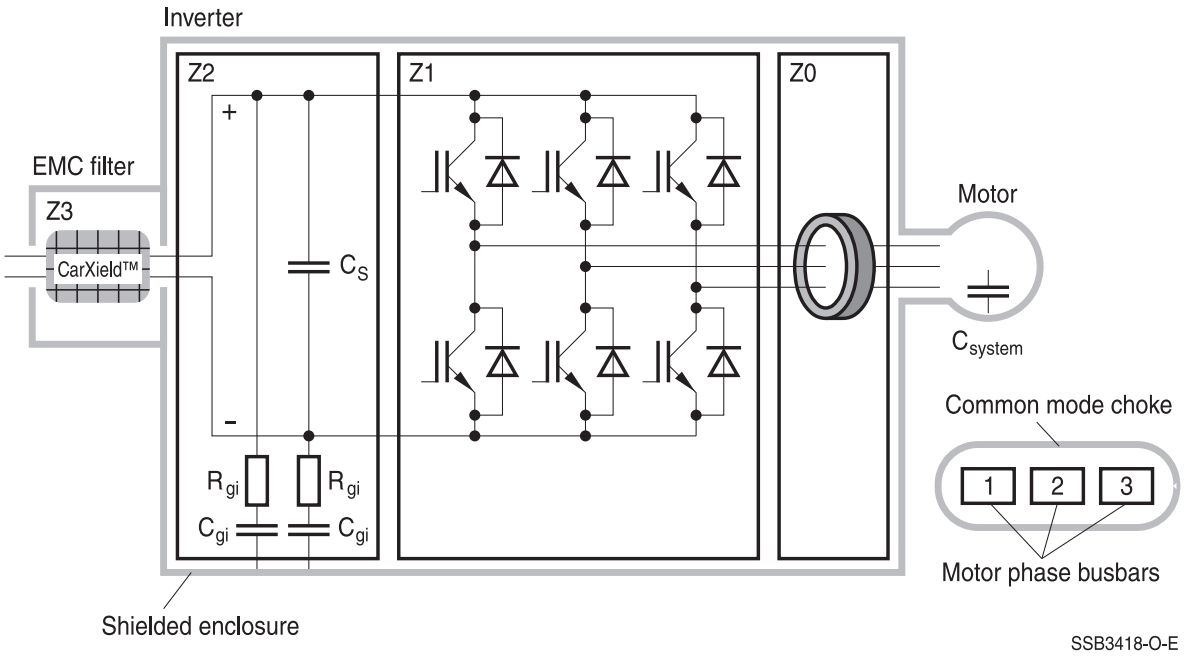

Any further communication or control cable, which penetrates one of those above mentioned zones, needs to be EMC treated. The importance of the zone concept increases with frequency. Please consider on board EMC measures for all supportive functions like low power DC/DC conversion, controller, modulator etc. to reduce further the noise level.

Creepage and clearance

The design is in accordance to be compatible with the clearance of 2.5 mm line to line and of 6 mm line to GND as well as with the creepage distance of 10.8 mm requirement. Therefore, filter is applicable for installation in pollution degree two.
In the areas enclosed by potting compound, pollution degree 1 is considered in accordance with DIN EN IEC 60664-1 VDE 0110-1:2022-07, resulting in a reduced creepage distance of 1.8 mm in these areas.

Appearance

As long as no pure copper is visible, scratches on the busbar terminals are acceptable. Repetitive fastening and loosening of the customer interface may provoke also scratches and damages, which are not in responsibility of TDK Electronics.

Scratches might be visible on the housing. The scratches are based on the burr removal process after casting and cannot be prevented. No material-internal structure is affected.

Technical cleanliness

The production and delivery of clean filter components with low particle contamination is one of the main targets of TDK Electronics MAG. Please use the ZVEI booklet “Technical Cleanliness in electrical engineering, dated April 2014” for further explanation and background information. It is used as guidance but not as limitation!

Product material base

All raw material suppliers are certified according to ISO 9001:2015.

Product requalification

The product requalification will be performed every two years with representatives of EMC filter standard families.

Typical qualification

The filter B84252B0400A000 will be qualified acc. to TDK Electronics MAG qualification program for filter to be used in automotive applications. Following tests are applied as a minimum for this product.

Test	Test requirements	Test procedure / Test conditions	Performance requirements[1)]
Vibration test	Sinusoidal vibration: DIN EN 60068-2-6:2008 Wide broadband: DIN EN 60068-2-64:2020	Test duration 22 h Superimposed temperature pattern and vibration profile is shown below No voltage applied	All parameters within specification
Mechanical shock	DIN EN 60068-2-27:2010	Peak acceleration 500 m/s^2 Puls duration 6 ms Puls shape half-sine Number of shocks 10 No voltage applied	All parameters within specification
High/low temperature storage	Acc. to TDK test specification	2 cycles of 24 h: 12 h storage at $T_{stg\,max}$ = 105 °C and 12 h storage at $T_{stg\,min}$ = –40 °C No voltage applied	All parameters within specification
Damp heat, cyclical	DIN EN IEC 60068-2-30:2006, Variant 1	6 cycles, cycle time 24 h Test duration: 144 h Applied voltage: 500 V DC	All parameters within specification
Damp heat, cyclical (with frost)	DIN EN IEC 60068-2-38:2022	10 cycles, cycle time 24 h first 5 cycles incl. cold subs cycle Test duration: 240 h Applied voltage: 500 V DC	All parameters within specification
Thermal shock	DIN EN 60068-2-14 VDE 0468-2-14:2010, Test Na	$T_{A\,min}$ = –40 °C, $T_{A\,max}$ = 105 °C Number of cycles: 450 Transition time < 10 s Dwell time 0.5 h No voltage applied	All parameters within specification
High temperature exposure	AEC-Q200 Rev. E, Table 13 - Test 3 MIL-STD-202G, Test method 108	$T_{A\,max}$ = 105 °C Test duration: 1000 h No voltage applied	All parameters within specification
Damp heat, steady state	AEC-Q200 Rev. E, Table 13 - Test 7 MIL-STD-202G Method 103	$T_{A\,max}$ = 40 °C, 93% R.H. Test duration: 1000 h No voltage applied	All parameters within specification

Test	Test requirements	Test procedure / Test conditions	Performance requirements[1)]
Thermal temperature rise	DIN EN 60939-3 VDE 0565-3-4:2016, chapter 4.20	$T_{A\ max}$ = 85 °C Applied load: rated current in steady state and mission profiles according product data sheet	All parameters within specification
High temperature endurance test	DIN EN 60068-2-2:2008	$T_{A\ max}$ = 70 °C Test duration: 1000 h Applied voltage: 500 V DC (1,5 h ON / 0,5 h OFF)	All parameters within specification
Exposing to chemical substances	ISO 16750-5:2023, Application Method III & IV	$T_{A\ max}$ = 105 °C DG, DH, DK 10 min DJ, EA, EB, EC, ED duration 22 h No voltage applied	All parameters within specification (discoloration are aloud)

1) High voltage test done and typical energy potential measured by 23 °C ± 5 °C only.

Temperature profile for vibration test

Time min	Temperature °C
0	T_{RT} = +23 °C
60	$T_{A\ min}$ = –40 °C
150	$T_{A\ min}$ = –40 °C
300	$T_{A\ max}$ = +85 °C
410	$T_{A\ max}$ = +85 °C
480	T_{RT} = +23 °C

Excitation profile for vibration test

Excitation	Frequency Hz	Acceleration m/s^2
Sinusoidal	100	30
	200	60
	440	60
Broadband random	10	10
	100	10
	300	0.51
	500	5
	2000	5

Cautions and warnings

CarXield

Please note further advice in our website www.tdk-electronics.tdk.com/pemc_auto_gti

- It shall be ensured that only qualified persons (electricity specialists) are engaged on work such as planning, assembly, installation, operation, repair and maintenance. They must be provided with the corresponding documentation.
- Danger of electric shock: The products contain components that store an electric charge. Dangerous voltages can continue to exist at the product terminals for longer than five minutes even after the power has been switched off.
- The protective earth connections shall be the first to be made when the product is installed and the last to be disconnected. Depending on the magnitude of the leakage currents, the particular specifications for making the protective-earth connection must be observed.
- Impermissible overloading of the product, such as with circuits able to cause resonances, impermissible voltages at higher frequencies etc. can lead to bodily injury and death as well as cause substantial material damages (e.g. destruction of the filter housing).
- The products must be protected in the application against impermissible exceeding of the rated currents by overcurrent protective devices.
- The components can become very hot during operation, there is the risk of burns if touched. The product can remain hot for some time after the power is switched off!
- The products are only to be attached to the fixings or mounting holes provided for this purpose in accordance with the data sheet. It is not permitted for the product specified in the data sheet to assume a mechanical function in the final application, in particular any type of tension or pressure on the product must be prevented.

Display of ordering codes for TDK Electronics products

The ordering code for one and the same product can be represented differently in data sheets, data books, other publications, on the company website, or in order-related documents such as shipping notes, order confirmations and product labels. The varying representations of the ordering codes are due to different processes employed and do not affect the specifications of the respective products.
Detailed information can be found on the Internet under www.tdk-electronics.tdk.com/orderingcodes.

Symbols and terms

CarXield

Symbol	English
α	Insertion loss
$C_{L\text{-}GND}$	Capacitance between one line and ground
C_{gi}	Capacitance between inverter and inverter ground
dV/dt	Rate of voltage rise
E	Energy
f	Frequency
GND	Ground
I_{CM}	Common mode current
I_R	Rated current
L-GND	Line to ground
L-L	Line to line
R	Resistance
R_{gi}	Resistance between inverter and inverter ground
R_{typ}	Typical resistance
t_d	Discharge time
T_A	Ambient temperature
$T_{A\ max}$	Maximum ambient temperature
$T_{A\ min}$	Minimum ambient temperature
T_{CAP}	Capacitor temperature
T_{CORE}	Core temperature
$T_{PLASTIC}$	Plastic parts temperature
T_R	Rated temperature
T_{RT}	Room temperature
$T_{stg\ max}$	Maximum storage temperature
$T_{stg\ min}$	Minimum storage temperature
$T_{stg\ mounted}$	Storage temperature when build into the final application
$T_{stg\ packed}$	Storage temperature in packed condition
V_R	Rated voltage
V_{test}	Test voltage
X2	Class of the X capacitor
Y2	Class of the Y capacitor
Z_i	EMC Zone, i = 0, 1, 2, 3
Z_s	Serial impedance
DC	Direct current
CM	Common mode
PWM	Pulse-width modulation
EMC	Electromagnetic compatibility
EMI	Electromagnetic interference
ESD	Electrostatic discharge
HV	High voltage

Important notes

The following applies to all products named in this publication:

1. Some parts of this publication contain **statements about the suitability of our products for certain areas of application**. These statements are based on our knowledge of typical requirements that are often placed on our products in the areas of application concerned. We nevertheless expressly point out **that such statements cannot be regarded as binding statements about the suitability of our products for a particular customer application**. As a rule we are either unfamiliar with individual customer applications or less familiar with them than the customers themselves. For these reasons, it is always ultimately incumbent on the customer to check and decide whether a product with the properties described in the product specification is suitable for use in a particular customer application.
2. We also point out that **in individual cases, a malfunction of electronic components or failure before the end of their usual service life cannot be completely ruled out in the current state of the art, even if they are operated as specified**. In customer applications requiring a very high level of operational safety and especially in customer applications in which the malfunction or failure of an electronic component could endanger human life or health (e.g. in accident prevention or life-saving systems), it must therefore be ensured by means of suitable design of the customer application or other action taken by the customer (e.g. installation of protective circuitry or redundancy) that no injury or damage is sustained by third parties in the event of malfunction or failure of an electronic component.
3. **The warnings, cautions and product-specific notes must be observed**.
4. In order to satisfy certain technical requirements, **some of the products described in this publication may contain substances subject to restrictions in certain jurisdictions (e.g. because they are classed as hazardous)**. Useful information on this will be found in our Material Data Sheets on the Internet (www.tdk-electronics.tdk.com/material). Should you have any more detailed questions, please contact our sales offices.
5. We constantly strive to improve our products. Consequently, **the products described in this publication may change from time to time**. The same is true of the corresponding product specifications. Please check therefore to what extent product descriptions and specifications contained in this publication are still applicable before or when you place an order.
   We also **reserve the right to discontinue production and delivery of products**. Consequently, we cannot guarantee that all products named in this publication will always be available. The aforementioned does not apply in the case of individual agreements deviating from the foregoing for customer-specific products.
6. Unless otherwise agreed in individual contracts, **all orders are subject to our General Terms and Conditions of Supply**.

Important notes

7. **Our manufacturing sites serving the automotive business apply the IATF 16949 standard**. The IATF certifications confirm our compliance with requirements regarding the quality management system in the automotive industry. Referring to customer requirements and customer specific requirements (“CSR”) TDK always has and will continue to have the policy of respecting individual agreements. Even if IATF 16949 may appear to support the acceptance of unilateral requirements, we hereby like to emphasize that **only requirements mutually agreed upon can and will be implemented in our Quality Management System**. For clarification purposes we like to point out that obligations from IATF 16949 shall only become legally binding if individually agreed upon.
8. The trade names EPCOS, CarXield, CeraCharge, CeraDiode, CeraLink, CeraPad, CeraPlas, CSMP, CTVS, DeltaCap, DigiSiMic, FilterCap, FormFit, InsuGate, LeaXield, MediPlas, MiniBlue, MiniCell, MKD, MKK, ModCap, MotorCap, PCC, PhaseCap, PhaseCube, PhaseMod, PhiCap, PiezoBrush, PlasmaBrush, PowerHap, PQSine, PQvar, SIFERRIT, SIFI, SIKOREL, SilverCap, SIMDAD, SiMic, SIMID, SineFormer, SIOV, SurfIND, ThermoFuse, WindCap, XieldCap are **trademarks registered or pending** in Europe and in other countries. Further information will be found on the Internet at www.tdk-electronics.tdk.com/trademarks.

Release 2024-02