IS31CS8979

18-CHANNEL INTELLIGENT LED DRIVERS WITH BUILT-IN MCU

GENERAL DESCRIPTION

IS31CS8979 combines MCU function and 18-channel LED drivers for applications in the automotive environment such as ambient lighting, dome lighting, and other lighting functions.

MCU includes a 1T 8051 core with enhanced DSP function. There are 2KB SRAM and 64KB e-Flash and both have ECC protections for the harsh application environment. There are three watchdog timers each with an independent clock that further enhances the reliable operations of the MCU.

The LED driver consists of 18 high voltage PWM modulated constant current sources with each up to 60mA. It can be used for driving individual LED strings or RGB LEDs. The current source can be controlled globally with 5-bit precision. And the 8-bit PWM frequency can be up to 25KHz with spread-spectrum and selectable phase delay for optimal EMI performance. Other features of the LED drivers include blink functions and 8-bit dot correction for each channel for accurate RGB color mixing. It also provides fault detection such as LED open/short detections as well as thermal roll-off and shutdown.

IS31CS8979 can be controlled and programmed with various host interfaces such as PWM duty, I²C slave, UART/LIN, and SPI. With a built-in MCU, IS31CS8979 can perform complex color space conversions and other fancy functions such as pattern animation and other extended functions for various automotive lighting requirements. IS31CS8979 also supports in-system-programming as well as in-system calibration.

Lastly, IS31CS8979 can be cascaded to support multiples of LED outputs with synchronization. IS31CS8979 uses a single power supply with QFN-40 package of a 6mm x 6mm body size.

APPLICATIONS

- Industrial and appliance LED lighting
- Ambient lighting
- Indication light animations
- Welcome lighting

FEATURES

MCU

- Up to 32MHz 1-Cycle 8051 CPU core (16MHz zero wait state)
- 16-bit Timers T0/T1/T2/T3/T4 and 24-bit Timer T5
- WDT1/WDT2/WDT3 with clock fault monitoring
- Checksum and CRC accelerator
- 256B IRAM and 1792B XRAM with ECC check
- 64KB Code e-Flash with ECC and two 128x16 IFB
  - Code security and data loss protection
  - Endurance: 100K@85°C
  - Retention: 20 years@85°C /w ECC
- Internal oscillators
  - 16MHz/32MHz with Spread Spectrum option
  - Internal low-power oscillator 128KHz/256KHz
- PWM controller and Timer/Capture and QEC
- Melody generator
- I²C Master
- I²C Slave Controller with address wakeup
- SPI Master/Slave Controller
- EUART1 and EUART2/LIN
- Capacitance sense touch-key controller
  - Shield output for moisture immunity
  - Active proximity sensing
- 12-Bit SAR ADC with temperature sensor
- 8-Bit DAC and four analog comparators
- Single power supply 2.7V – 5.5V

LED Driver

- Output current capability and number of outputs:
- 60mA × 18 outputs, tolerance voltage 40V
- 1MHz I²C with automatic address increment
- Programmable H/L logic: 1.4V/0.4V, 2.4V/0.6V
- Accurate Color Rendition
  - 32 steps Global current adjust
  - 8-bit Dot correction for each channel
  - 8-bit PWM for each channel
- Selectable PWM method (200Hz or 25kHz) 256-Step group blinking with frequency programmable from 24Hz to 10.66s and duty cycle from 0% to 99.6%
- Fault report (open detect/thermal roll off /thermal shutdown)
- Thermal roll-off programmable set point
- SDB rising edge resets I²C interface
- EMI Reduction Technology
  - Spread spectrum
  - Selectable 9 phase delay
- Current accuracy (All output on)
  - Bit to bit: < +/-4%
  - Device to device: < +/-6%

Miscellaneous

- Up to 9 GPIO with multi-function capabilities
- Power-on reset and Low voltage detect (2.2V-4.5V)
- Low power consumption less than 10uA in shut down mode
- Operation temperature range: -40℃ to 85℃
- QFN-40 (6mm x 6mm)
- RoHS & Halogen-Free compliant package

- TSCA Compliance

BLOCK DIAGRAM

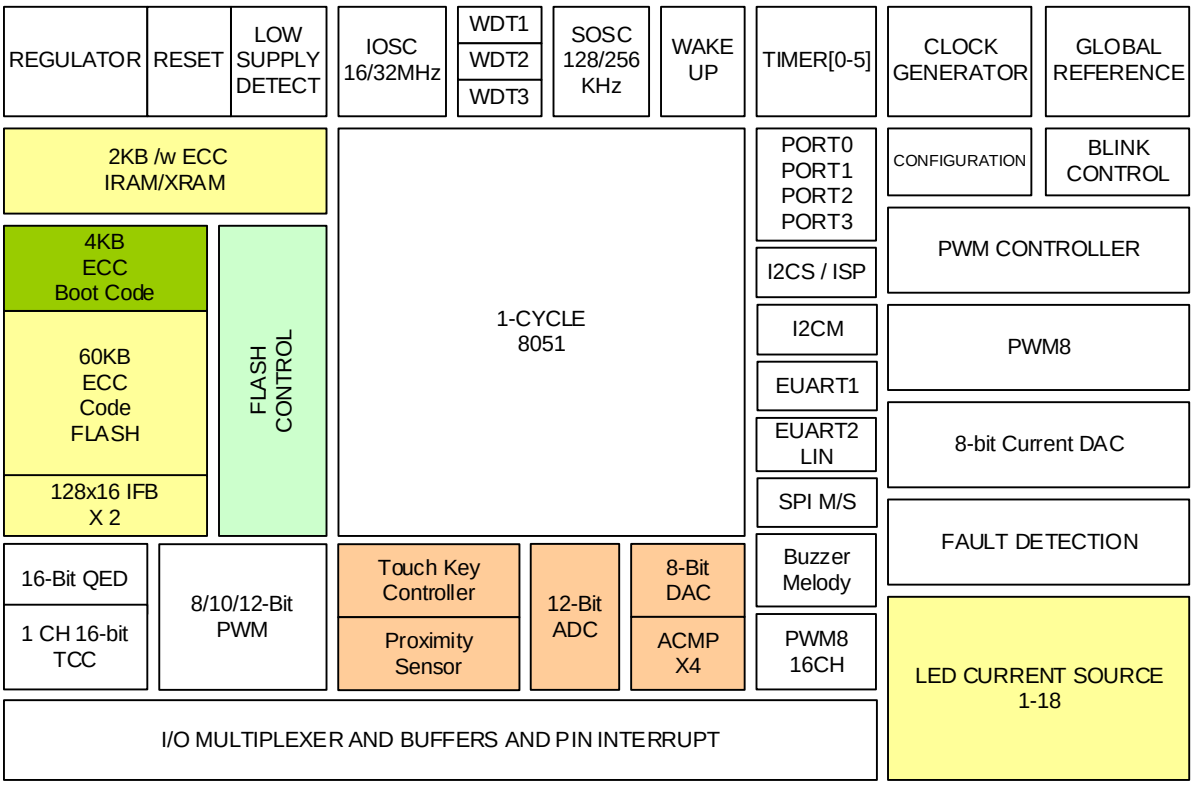

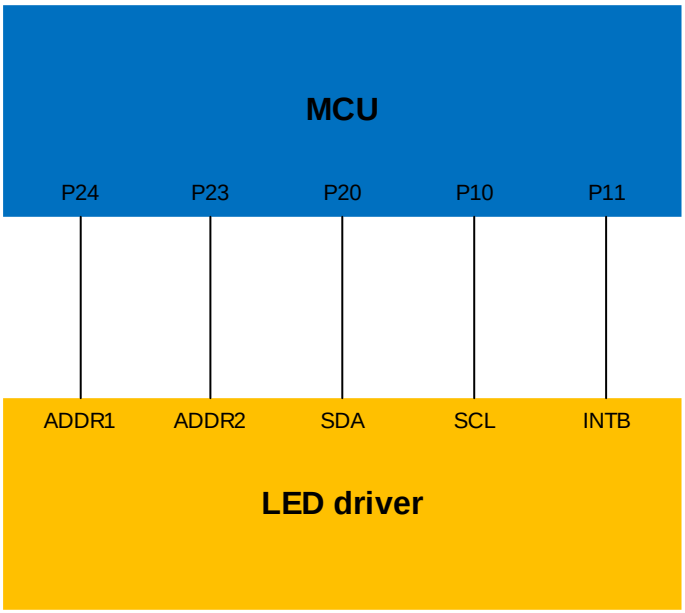

PIN CONNECTION

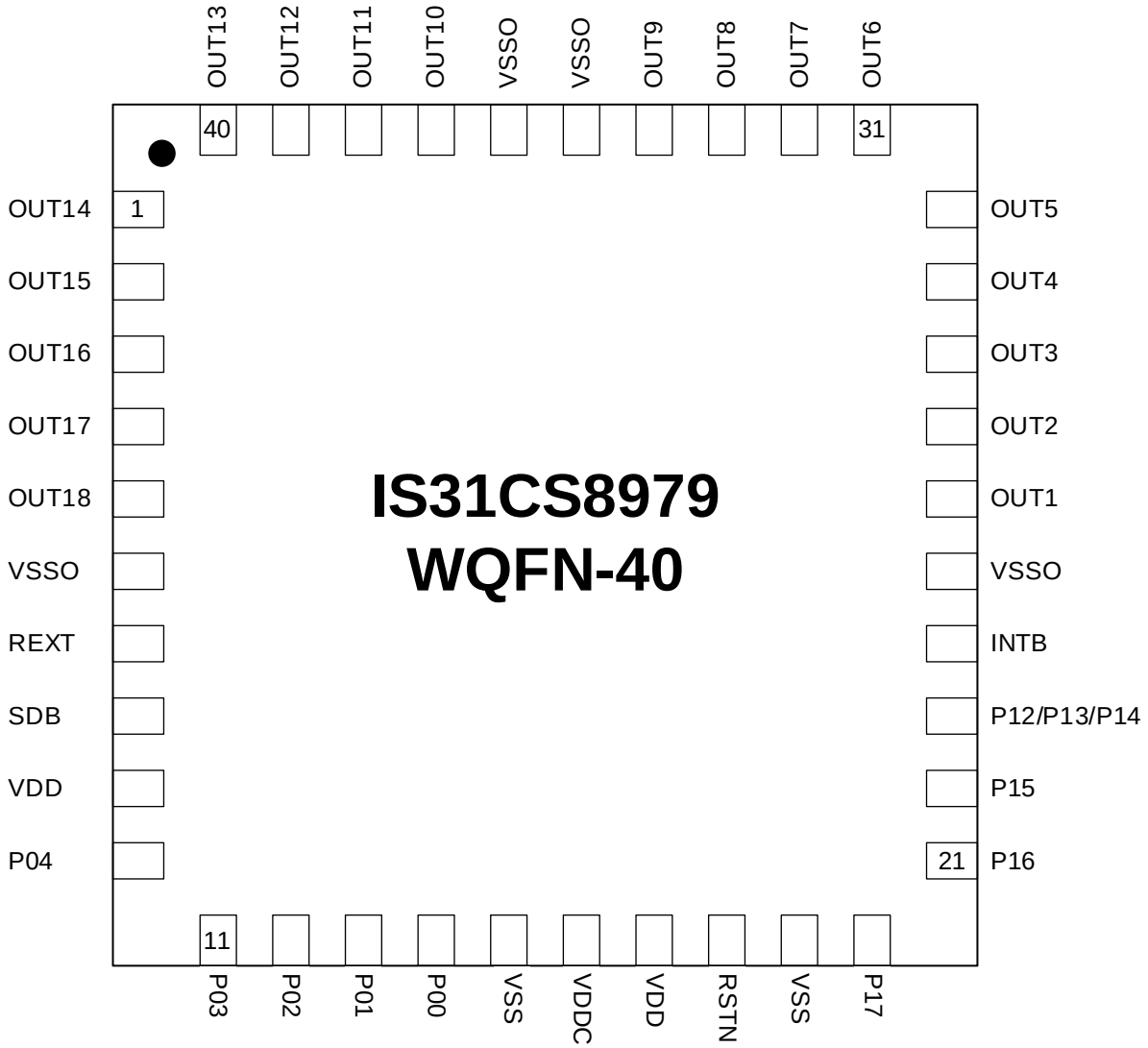

Table of Contents

1. PIN Description 1

2. PIN Description and Multi-function Table 2

3. Typical Application Diagram and Circuit 4

4. LED Driver 5
- 4.1 I²C Application 5
  - 4.1.1 I²C Interface 5
  - 4.1.2 Address Auto Increment 6
  - 4.1.3 Read Operation 6
- 4.2 LED Register Definitions 7

5. Application Information 14
- 5.1 RISET 14
- 5.2 Current Setting 14
- 5.3 PWM Control 14
- 5.4 PWM Frequency Select 14
- 5.5 Open Detect Function 15
- 5.6 Spread Spectrum Function 15
- 5.7 Shutdown Mode 15
- 5.8 Software Shutdown 15
- 5.9 Hardware Shutdown 15

6. Memory Map 16

7. REGISTER MAP SFR (0x80 – 0xFF) 17

8. REGISTER MAP XFR (0xA000 – 0xAFFF) 18

9. 8051 CPU 20
- 9.1 CPU Register 20
- 9.2 Addressing Timing and Memory Modes 21
- 9.3 MOVX A, @Ri Instructions 22
- 9.4 Dual Data Pointers and MOVX operations 23
- 9.5 Interrupt System 24
- 9.6 Register Access Control 27
- 9.7 Clock Control and Power Management Modes 28
- 9.8 IDLE Mode 30
- 9.9 STOP Mode 30
- 9.10 SLEEP Mode 30
- 9.11 Clock Control 31
- 9.12 Watchdog Timer 31
- 9.13 System Timers – T0 and T1 34
  - 9.13.1 Mode 0 35
  - 9.13.2 Mode 1 35
  - 9.13.3 Mode 2 35
  - 9.13.4 Mode 3 35
- 9.14 System Timer – T2 36
- 9.15 System Timer – T3 and T4 38
- 9.16 System Timer – T5 39
- 9.17 Multiplication and Division Unit (MDU) 40
  - 9.17.1 Division – 32-bit divide by 16-bit or 16-bit divide by 16-bit 42
  - 9.17.2 Multiplication – 16-bit multiply by 16-bit 42
  - 9.17.3 Normalization – 32-bit 42
  - 9.17.4 Shift – 32-bit 43
  - 9.17.5 MDU Flag 43
- 9.18 I²C Master 43
- 9.19 Checksum/CRC Accelerator 46
- 9.20 Break Point and Debug Controller 47
- 9.21 Debug I²C Port 50
- 9.22 Data SRAM ECC Handling 50
- 9.23 Program ECC Handling 51
- 9.24 Memory and Logic BIST Test 52
- 9.25 System Clock Monitoring 53
- 9.26 Reset 53

10. Flash Controller 55

11. I²C Slave Controller 2 (I2CS2) 60

12. EUART1 with Enhanced Function of UART1 63

13. EUART2 with LIN Controller 67

14. Serial Peripheral Interface (SPI) 76
14.1 SPI Master Timing Illustration 77
14.1.1 CPOL=0, CPHA=0 77
14.1.2 CPOL=0, CPHA=1 78
14.1.3 CPOL=1, CPHA=0 78
14.1.4 CPOL=1, CPHA=1 78
14.2 SPI Slave Timing Illustration 79
14.2.1 CPOL=0, CPHA=0 79
14.2.2 CPOL=0, CPHA=1 79
14.2.3 CPOL=1, CPHA=0 79
14.2.4 CPOL=1, CPHA=1 80

15. Timer with Compare/Capture and Quadrature Encoder 81

16. PWM Controller 87

17. PWM8 Controller 90

18. Buzzer and Melody Controller 93

19. Core Regulator and Low Voltage Detection 96
19.1 Supply Low Voltage Detection (LVD) 96

20. IOSC and SOSC 98
20.1 IOSC 16MHz/32MHz 98
20.2 SOSC 99
20.3 Clock Output 99

21. 12-Bit SAR ADC (ADC) 100

22. Analog Comparators (ACMP) and 8-bit DAC 103

23. Touch Key Control III 106

24. Active Proximity Sensor 112

25. GPIO Multi-Function Select and Pin Interrupt 115

26. Information Block IFB 117

27. Writer Mode 119

28. Boot Code and In-System Programming 120

29. Electrical Specifications 121
29.1 Thermal Characteristics 121
29.2 Absolute Maximum Ratings (MCU) 121
29.3 Recommended Operating Condition (MCU) 121
29.4 Absolute Maximum Ratings (LED Driver) 121
29.5 LED DC Electrical Characteristics (VDD = 2.2V to 5.5V TA=-40℃ to 85℃) 122
29.6 MCU AC Electrical Characteristics (VDD =2.2V to 5.5V TA=-40℃ to 85℃) 123
29.7 LED AC Electrical Characteristics (VDD =2.2V to 5.5V TA=-40℃ to 85℃) (NOTE 6) 124
29.8 Classification Reflow Profiles 125

30. Packaging outline 126
30.1 40-pin QFN 126
30.1.1 Recommended Land Pattern 126
30.1.2 POD 127

31. Ordering Information 128

32. Errata 129

33. Revision 130

List of Tables

1. PIN Description 1
Table 1-1 PIN Description 1

2. PIN Description and Multi-function Table 2
Table 2-1 Pin Description 2
Table 2-2 Multifunction Configuration 3

4. LED Driver 5
Table 4-1 Slave Address 5
Table 4-2 LED Register Function 7

7. REGISTER MAP SFR (0x80 – 0xFF) 17
Table 7-1 Register Map SFR(0x80-0xFF) 17

8. REGISTER MAP XFR (0xA000 – 0xAFFF) 18
Table 8-1 REGISTER MAP XFR (0xA000 – 0xAFFF) 19

9. 8051 CPU 20
Table 9-1 Interrupt sources and the corresponding interrupt vectors 25

26. Information Block IFB 117
Table 26-1 Information Block (IFB) 118

27. Writer Mode 119
Table 27-1 Writer mode PINs and Functions 119

List of Figures

3. Typical Application Diagram and Circuit 4
Figure 3-1 IS31CS8979 typical application diagram 4
Figure 3-2 IS31CS8979 typical application circuit 4

4. LED Driver 5
Figure 4-1 I²C Interface Timing 6
Figure 4-2 I²C Bit Transfer 6
Figure 4-3 Writing to IS31CS8979 (Typical) 6
Figure 4-4 Writing to IS31CS8979 (Automatic Address Increment) 7
Figure 4-5 Reading from IS31CS8979 7

6. Memory Map 16
Figure 6-1 Memory Map 16

9. 8051 CPU 20
Figure 9-1 Watchdog Timer 31
Figure 9-2 Timer/Counter Mode 0: 13-bit counter 35
Figure 9-3 Timer/Counter Mode 1: 16-bit counter 35
Figure 9-4 Timer/Counter Mode 2: 8-bit re-load 35
Figure 9-5 Timer/Counter Mode 3: Two 8-bit counters 36
Figure 9-6 Timer 2 block diagram of Auto-reload and Capture 37
Figure 9-7 Timer 2 block diagram of Baud Rate Generator 38
Figure 9-8 Timer 3 and Timer 4 block diagram 38
Figure 9-9 Timer 5 block diagram 40
Figure 9-10 System clock monitoring 53
Figure 9-11 Reset block diagram 54

13. EUART2 with LIN Controller 67
Figure 13-1 EUART2 with LIN Controller block diagram 67
Figure 13-2 LIN frame structure 70
Figure 13-3 LIN frame timing 70
Figure 13-4 Finite State Machine of the LIN extension 71

14. Serial Peripheral Interface (SPI) 76
Figure 14-1 SPI Master Timing with CPOL=0, CPHA=0 77
Figure 14-2 SPI Master Timing with CPOL=0, CPHA=1 78
Figure 14-3 SPI Master Timing with CPOL=1, CPHA=0 78
Figure 14-4 SPI Master Timing with CPOL=1, CPHA=1 78
Figure 14-5 SPI Slave Timing with CPOL=0, CPHA=0 79
Figure 14-6 SPI Slave Timing with CPOL=0, CPHA=1 79
Figure 14-7 SPI Slave Timing with CPOL=1, CPHA=0 79
Figure 14-8 SPI Slave Timing with CPOL=1, CPHA=1 80

15. Timer with Compare/Capture and Quadrature Encoder 81
Figure 15-1 TCC implementations diagram 81
Figure 15-2 TCC timing diagram 82
Figure 15-3 QE implementation diagram 84
Figure 15-4 Timing diagram of PHA/PHB with X1/X2/X4 modes 84

18. Buzzer and Melody Controller 93
Figure 18-1 Buzzer and Melody output timing diagram 93

19. Core Regulator and Low Voltage Detection 96
Figure 19-1 LVD Threshold VS LVDTHD[6-0] 96

20. IOSC and SOSC 98
Figure 20-1 IOSC sweep rate and amplitude of Spread Spectrum 98
Figure 20-2 SOSC slow oscillator function block 99

21. 12-Bit SAR ADC (ADC) 100
Figure 21-1 12-bit SAR ADC block diagram 100

22. Analog Comparators (ACMP) and 8-bit DAC 103
Figure 22-1 ACMP and 8-bit DAC block diagram 103

23. Touch Key Control III 106
Figure 23-1 TK3 signals timing diagram 106
Figure 23-2 Timing diagram of Auto Detection in Sleep mode 107

24. Active Proximity Sensor 112
Figure 24-1 Active Proximity Sensor Illustration 112
Figure 24-2 Proximity Sensing Operation 112

25. GPIO Multi-Function Select and Pin Interrupt 115
Figure 25-1 GPIO Multi-Function Select and Pin Interrupt 115

29. Electrical Specifications 121
Figure 29-1 Temperature Reflow Profile 125

List of Registers

4. LED Driver 5

0x00 Configuration Register 7
0x01 Global Current Control Register 8
0x02~0x13 Scaling Register 9
0x14 Open Detect Enable Register 9
0x15 LED Open Status Register 1 9
0x16 LED Open Status Register 2 10
0x17 LED Open Status Register 3 10
0x18 Temperature Status Register 10
0x19 Spread Spectrum Register 11
0x1A DC PWM Register (PWM=256/256) 11
0x1B DC PWM Register (PWM=256/256) 11
0x1C DC PWM Register (PWM=256/256) 11
0x1D Phase Delay and Clock Phase Register 11
0x1E Phase Delay and Clock Phase Register 11
0x1F-0x30 PWM Register 12
0x31 Blinking Enable Register 12
0x32 Blinking Enable Register 12
0x33 Blinking Enable Register 12
0x34 Blinking Frequency Register 13
0x35 Blinking Duty Cycle Register 13
0x36 Scaling Update Register 13
0x37 Update Register 13
0x3F Reset Register 13

9. 8051 CPU 20

ACC (0xE0) Accumulator R/W (0x00) 20
B (0xF0) B Register R/W (0x00) 20
PSW (0xD0) Program Status Word R/W (0x00) 20
SP (0x81) Stack Pointer R/W (0x00) 20
ESP (0x9B) Extended Stack Pointer R/W (0x00) 20
STATUS (0xC5) Program Status Word RO(0x00) 20
WTST (0x92) R/W (0x07) 21
MCON (0xC6) XRAM Relocation Register R/W (0x00) TA Protected 22
ACON (0x9D) R/W (0x00) TA Protected 22
DPXR (0xDA) R/W (0x00) 22
MXAX (0xEA) MOVX Extended Address Register R/W (0x00) 22
DPS (0x86) Data Pointer Select R/W (0x00) 23
DPL (0x82) Data Pointer Low R/W (0x00) 23
DPH (0x83) Data Pointer High R/W (0x00) 23
DPL1 (0x84) Extended Data Pointer Low R/W (0x00) 23
DPH1 (0x85) Extended Data Pointer High R/W (0x00) 23
DPX (0x93) Data Pointer Top R/W (0x00) 24
DPX1 (0x95) Extended Data Pointer Top R/W (0x00) 24
IE (0xA8) Interrupt Enable Register R/W (0x00) 25
EXIE (0xE8) Extended Interrupt Enable Register R/W (0x00) 25
IP (0xB8) Interrupt Priority Register R/W (0x00) 25
EXIP (0xF8) Extended Interrupt Priority Register R/W (0x00) 26
EXIF (0x91) Extended Interrupt Flag R/W (0x00) 26
WKMASK (0x9F) R/W (0xFF) Wake Up Mask Register TB Protected 26
TCON (0x88) R/W (0x00) 27
TA (0xC7) Time Access Control Register A R/W (xxxxxxx0) 27
TB (0xC9) Time Access Control Register B R/W (0x00) 27
PCON (0x87) R/W (0x00) 28
PMR (0xC4) R/W (010xxxxx) 28
CKSEL (0x8F) System Clock Selection Register R/W (0x0C) TB Protected 29
WKMASK (0x9F) Wake-Up Mask Register R/W (0xFF) TB Protected 30
WDCON (0xD8) WDT1 Interrupt Flag Register R/W (0x02) TA Protected only for bit 0 RWT 31
CKCON (0x8E) Clock Control and WDT1 R/W (0xC7) 31
WDT2CF (0xA0D8) Watchdog Timer 2 Configure Registers R/W (0x00) TB Protected 32
WDT2L (0xA0D9) Watchdog Timer 2 Time Out Value Low Byte RW (0xFF) TB Protected 33
WDT2H (0xA0DA) Watchdog Timer 2 Time Out Value High Byte RW (0x0F) TB Protected 33
WDT3CF (0xA0DB) Watchdog Timer 3 Configure Registers R/W (0xD1) TB Protected 33
WDT3L (0xA0DC) Watchdog Timer 3 Timeout Value Low Byte R/W (0x3F) TB Protected 33
WDT3H (0xA0DD) Watchdog Timer 3 Timeout Value High Byte R/W (0x00) TB Protected 33
TCON (0x88) R/W (0x00) 34
TMOD (0x89) Timer 0 and 1 Mode Control Register R/W (0x00) 34
TL0 (0x8A) Timer 0 Low Byte Register R/W (0x00) 36
TH0 (0x8C) Timer 0 High Byte Register R/W (0x00) 36

TL1 (0x8B) Timer 1 Low Byte Register R/W (0x00) 36
TH1 (0x8D) Timer 1 High Byte Register R/W (0x00) 36
T2CON (0xC8) Timer 2 Control and Configuration Register R/W (0x00) 36
TL2 (0xCC) Timer 2 Low Byte Register R/W (0x00) 38
TH2 (0xCD) Timer 2 High Byte Register R/W (0x00) 38
RLDL (0xCA) Timer 2 reload Low Byte Register R/W (0x00) 38
RLDH (0xCB) Timer 2 reload High Byte Register R/W (0x00) 38
T34CON (0xCF) Timer 3 and Timer 4 Control and Status Register R/W (0x00) 39
TL3 (0xAE) Timer 3 Low Byte Register R/W (0x00) 39
TH3 (0xAF) Timer 3 High Byte Register R/W (0x00) 39
TL4 (0xAC) Timer 4 Low Byte Register R/W (0x00) 39
TH4 (0xAD) Timer 4 High Byte Register R/W (0x00) 39
T5CON (0xA068) Timer 5 Control and Status Register (0x00) 40
TL5 (0xA069) Timer5 Low Byte Register R/W (0x00) 40
TH5 (0xA06A) Timer5 Medium Byte Register R/W (0x00) 40
TT5 (0xA06B) Timer5 High Byte Register R/W (0x00) 40
ARCON (0xFF) MDU Control R/W (0x00) 41
MD0 (0xF9) MDU Data Register 0 R/W (0x00) 41
MD1 (0xFA) MDU Data Register 1 R/W (0x00) 41
MD2 (0xFB) MDU Data Register 2 R/W (0x00) 41
MD3 (0xFC) MDU Data Register 3 R/W (0x00) 41
MD4 (0xFD) MDU Data Register 4 R/W (0x00) 41
MD5 (0xFE) MDU Data Register 5 R/W (0x00) 42
I2CMTP (0xF7) I²C Master Time Period R/W (0x00) 44
I2CMSA (0xF4) I²C Master Slave Address R/W (0x00) 44
I2CMBUF (0xF6) I²C Master Data Buffer Register R/W (0x00) 44
I2CMCR (0xF5) I²C Master Control and Status Register R/W (0x00) 44
I2CMTO (0xC3) I2CTime Out Control Register R/W (0x00) 46
CCCFG (0xA078) Checksum/CRC Accelerator Configuration Register R/W (0x00) 46
CCDATA0 (0xA07C) Checksum/CRC Data Register 0 R/W (0x00) 47
CCDATA1 (0xA07D) Checksum/CRC Data Register 1 R/W (0x00) 47
CCDATA2 (0xA07E) Checksum/CRC Data Register 2 R/W (0x00) 47
CCDATA3 (0xA07F) Checksum/CRC Data Register 2 R/W (0x00) 47
BPINTF (0xA0E0) Break Point Interrupt Flag Register R/W (0x00) 48
BPINTE (0xA0E1) Break Point Interrupt Enable Register R/W (0x00) TB Protected 48
BPINTC (0xA0E2) Break Point Interrupt Control Register R/W (0x00) 48
BPCTRL (0xA0E3) DBG and BKP ISR Control and Status Register R/W (b'11111100) 48
PC1AL (0xA0F0) Program Counter Break Point 1 Low Address Register R/W (0x00) 49
PC1AH (0xA0F1) Program Counter Break Point 1 High Address Register R/W (0x00) 49
PC1AT (0xA0F2) Program Counter Break Point 1 Top Address Register R/W (0x00) 49
PC2AL (0xA0F4) Program Counter Break Point 2 Low Address Register R/W (0x00) 49
PC2AH (0xA0F5) Program Counter Break Point 2 High Address Register R/W (0x00) 49
PC2AT (0xA0F6) Program Counter Break Point 2 Top Address Register R/W (0x00) 49
DBPCIDL (0xA098) Debug Program Counter Address Low Register RO (0x00) 49
DBPCIDH (0xA099) Debug Program Counter Address High Register RO (0x00) 50
DBPCIDT (0xA09A) Debug Program Counter Address Top Register RO (0x00) 50
DBPCNXL (0xA09B) Debug Program Counter Next Address Low Register RO (0x00) 50
DBPCNXH (0xA09C) Debug Program Counter Next Address High Register RO (0x00) 50
DBPCNXT (0xA09D) Debug Program Counter Next Address Top Register RO (0x00) 50
STEPCTRL (0xA09E) Single Step Control Enable Register R/W (0x00) 50
SI2CDBGID (0xA09F) Slave I²C Debug ID Register R/W (0x36) TB Protected 50
DECCCFG (0xA02D) Data ECC Configuration Register R/W (0x80) TB Protected 51
DECCADL (0xA02E) Data ECC Configuration and Address Register Low RO (0x00) 51
DECCADH (0xA02F) Data ECC Configuration and Address Register High RO (0x80) 51
PECCCFG (0xA00D) Program ECC Configuration Register R/W (0x80) TB Protected 51
PECCADL (0xA00E) Program ECC Fault Address Register Low RO (0x00) 52
PECCADH (0xA00F) Program ECC Fault Address Register High R/W (0x80) 52
BSTCMD (0xA016) SRAM Built-In and Logic Self-Test R/W (0x00) TB Protected 52
TSTMON (0xA014) Test Monitor Flag R/W (0x00) 53
RSTCMD (0xA017) Reset Command Register R/W (0x00) TB Protected 54

10. Flash Controller 55
FLSHCMD (0xA025) Flash Controller Command Register R/W (0x80) TB Protected 55
FLSHDATL (0xA020) Flash Controller Data Register R/W (0x00) 56
FLSHDATH (0xA021) Flash Controller Data Register R/W (0x00) 56
FLSHADL (0xA022) Flash Controller Low Address Data Register R/W (0x00) 56
FLSHADH (0xA023) Flash Controller High Address Data Register R/W (0x00) 56
FLSHECC (0xA024) Flash ECC Accelerator Register R/W 56
ISPCLKF (0xA026) Flash Command Clock Scaler R/W (0x25) TB Protected 56
FLSHPRT0 (0xA030) Flash Zone Protection Register 0 R/W (0x00) TB Protected 57
FLSHPRT1 (0xA031) Flash Zone Protection Register 1 R/W (0x00) TB Protected 57

FLSHPRT2 (0xA032) Flash Zone Protection Register 2 R/W (0x00) TB Protected 57
FLSHPRT3 (0xA033) Flash Zone Protection Register 3 R/W (0x00) TB Protected 57
FLSHPRT4 (0xA034) Flash Zone Protection Register 4 R/W (0x00) TB Protected 57
FLSHPRT5 (0xA035) Flash Zone Protection Register 5 R/W (0x00) TB Protected 57
FLSHPRT6 (0xA036) Flash Zone Protection Register 6 R/W (0x00) TB Protected 57
FLSHPRT7 (0xA037) Flash Zone Protection Register 7 R/W (0x00) TB Protected 57
FLSHPPT0 (0xA0C0) Flash Zone Protection Permanent Register 0 R/W (0xFF) TB Protected 57
FLSHPPT1 (0xA0C1) Flash Zone Protection Permanent Register 1 R/W (0xFF) TB Protected 58
FLSHPPT2 (0xA0C2) Flash Zone Protection Permanent Register 2 R/W (0xFF) TB Protected 58
FLSHPPT3 (0xA0C3) Flash Zone Protection Permanent Register 3 R/W (0xFF) TB Protected 58
FLSHPPT4 (0xA0C4) Flash Zone Protection Permanent Register 4 R/W 0xFF) TB Protected 58
FLSHPPT5 (0xA0C5) Flash Zone Protection Permanent Register 5 R/W (0xFF) TB Protected 58
FLSHPPT6 (0xA0C6) Flash Zone Protection Permanent Register 6 R/W (0xFF) TB Protected 58
FLSHPPT7 (0xA0C7) Flash Zone Protection Permanent Register 7 R/W (0xFF) TB Protected 58
FLSHPTI (0xA0C8) Flash IFB Protection Register R/W (0bXX11XX00) TB Protected 58
FLSHPRTC (0xA027) Flash Controller Code Protection Register R/W (0x00) TB Protected 58
FLSHVDD (0xA015) Flash VDD Switch Control Register R/W (0x00) TB Protected 59

11. I²C Slave Controller 2 (I2CS2) 60
I2CSCON2 (0xDB) I2CS2 Configuration Register R/W (0x00) 60
I2CSST2 (0xDC) I2CS2 Status Register R/W (0x00) 61
I2CSADR2 (0xDD) I2CS2 Slave Address 1 Register R/W (0x00) 61
I2CSDAT2 (0xDE) I2CS2 Data Register R/W (0x00) 62
I2CSADR2A (0xDF) I2CS2 Slave Address 2 Register R/W (0x00) 62

12. EUART1 with Enhanced Function of UART1 63
SCON1 (0xB1) EUART1 Configuration Register R/W (0x00) 63
SCON1X (0xB2) EUART1 Configuration Register R/W (0x00) 63
SFIFO1 (0xB3) EUART1 FIFO Status/Control Register R/W (0x00) 64
SINT1 (0xB4) EUART1 Interrupt Status/Enable Register R/W (0x00) 65
SBUF1 (0xB5) EUART1 Data Buffer Register R/W (0x00) 65
SBR1L (0xB6) EUART1 Baud Rate Register Low byte R/W (0x00) 66
SBR1H (0xB7) EUART1 Baud Rate Register High byte R/W (0x00) 66
SBRK1 (0xC1) EUART1 Break Configuration Register R/W (0x00) 66

13. EUART2 with LIN Controller 67
SCON2 (0xC2) UART2 Configuration Register R/W (0x00) 67
SFIFO2 (0xA5) UART2 FIFO Status/Control Register R/W (0x00) 68
SINT2 (0xA7) UART2 Interrupt Status/Enable Register R/W (0x00) 69
SBUF2 (0xA6) UART2 Data Buffer Register R/W (0x00) 70
LINCTRL (0xA090) LIN Status/Control Register R/W (0x00) 71
LINCNTRH (0xA091) LIN Timer Register High R/W (0xFF) 72
LINCNTRL (0xA092) LIN Time Register Low R/W (0xFF) 72
LINSBRH (0xA093) EUART/LIN Baud Rate Register High byte R/W (0x00) 72
LINSBRL (0xA094) EUART/LIN Baud Rate Register Low byte R/W (0x00) 72
LININT (0xA095) LIN Interrupt Flag Register R/W (0x00) 73
LININTEN (0xA096) LIN Interrupt Enable Register R/W (0x00) 73
LINTCON (0xA0B0) LIN Timeout Configuration Register R/W (0x00) 74
TXDTOL (0xA0B1) LIN TXD Dominant Timeout LOW Registers R/W (0x00) 75
TXDTOH (0xA0B2) LIN TXD Dominant Timeout HIGH Registers R/W (0x00) 75
RXDTOL (0xA0B3) LIN RXD Dominant Timeout LOW Registers R/W (0x00) 75
RXDTOH (0xA0B4) LIN RXD Dominant Timeout HIGH Registers R/W (0x00) 75
BSDCLRL (0xA0B5) Bus Stuck Dominant Clear Width Low Registers R/W (0x00) 75
BSDCLRH (0xA0B6) Bus Stuck Dominant Clear Width High Registers R/W (0x00) 75
BSDACT (0xA0B8) Bus Stuck Dominant Active Width Registers R/W (0x00) 75
BSDWKC (0xA0B7) Bus Stuck Dominant Fault Wakeup Configuration Register R/W (0x00) 75

14. Serial Peripheral Interface (SPI) 76
SPICR (0xA1) SPI Configuration Register R/W (0b001000xx) 76
SPIMR (0xA2) SPI Mode Control Register R/W (0x00) 76
SPIST (0xA3) SPI Status Register R/W (0x00) 77
SPIDATA (0xA4) SPI Data Register R/W (0xXX) 77

15. Timer with Compare/Capture and Quadrature Encoder 81
TCCFG1 (0xA050) TCC Configuration Register 1 R/W (0x00) 81
TCCFG2 (0xA051) TC Configuration Register 2 R/W (0x00) 82
TCCFG3 (0xA052) TC Configuration Register 3 R/W (0x00) 82
TCPRDL (0xA054) TC Period Register Low Double Buffer R/W (0x00) 83
TCPRDH (0xA055) TC Period Register High Double Buffer R/W (0x00) 83
TCCMPL (0xA056) TC Compare Register Low Double Buffer R/W (0x00) 83
TCCMPH (0xA057) TC Compare Register High Double Buffer R/W (0x00) 83

TCCPTRL (0xA060) TC Capture Register R Low RO (0x00) 83
TCCPTRH (0xA061) TC Capture Register R High RO (0x00) 83
TCCPTFL (0xA062) TC Capture Register F Low RO (0x00) 84
TCCPTFH (0xA063) TC Capture Register F High RO (0x00) 84
QECFG1 (0xA070) TCC Configuration Register 1 R/W (0x00) 84
QECFG2 (0xA071) QE Configuration Register 2 R/W (0x00) 85
QECFG3 (0xA072) QE Configuration Register 3 R/W (0x00) 85
QECNTL (0xA074) QE Counter Low R/W (0x00) 86
QECNTH (0xA075) QE Counter High R/W (0x00) 86
QEMAXL (0xA076) QE Maximum Counter Low R/W (0x00) 86
QEMAXH (0xA077) QE Maximum Counter High R/W (0x00) 86

16. PWM Controller 87
PWMCFG1 (0xA080) PWM Clock Scaling Setting Register R/W (0x00) 87
PWMCFG2 (0xA081) PWM Interrupt Enable and Flag R1egister R/W (0x08) 87
PWMCFG3 (0xA082) PWM Configuration 3 Register R/W (0x00) 87
PWM0DTYL (0xA084) PWM0 Duty Register L R/W (0x00) 88
PWM0DTYH (0xA085) PWM0 Duty Register H R/W (0x00) 88
PWM1DTYL (0xA086) PWM1 Duty Register L R/W (0x00) 88
PWM1DTYH (0xA087) PWM1 Duty Register H R/W (0x00) 88
PWM2DTYL (0xA088) PWM2 Duty Register L R/W (0x00) 88
PWM2DTYH (0xA089) PWM2 Duty Register H R/W (0x00) 88
PWM3DTYL (0xA08A) PWM3 Duty Register L R/W (0x00) 88
PWM3DTYH (0xA08B) PWM3 Duty Register H R/W (0x00) 88
PWM4DTYL (0xA08C) PWM3 Duty Register L R/W (0x00) 89
PWM4DTYH (0xA08D) PWM3 Duty Register H R/W (0x00) 89
PWM5DTYL (0xA08E) PWM5 Duty Register LR/W (0x00) 89
PWM5DTYH (0xA08F) PWM5 Duty Register H R/W (0x00) 89

17. PWM8 Controller 90
PWM8CF (0xA04C) PWM8 Configuration Register R/W (0x00) 90
PWM8CS (0xA04D) PWM8 Clock Scaling Setting Register R/W (0x00) 90
PWM8INT (0xA04E) PWM8 SYNC and Interrupt Flag Register R/W (0x00) 90
PWM8TRG (0xA04F) PWM Trigger Register R/W (0x00) 90
PWMDTY0 (0xA0A0) PWM Channel 0 Duty Register R/W (0x00) 90
PWMDTY1 (0xA0A1) PWM Channel 1 Duty Register R/W (0x00) 91
PWMDTY2 (0xA0A2) PWM Channel 2 Duty Register R/W (0x00) 91
PWMDTY3 (0xA0A3) PWM Channel 3 Duty Register R/W (0x00) 91
PWMDTY4 (0xA0A4) PWM Channel 4 Duty Register R/W (0x00) 91
PWMDTY5 (0xA0A5) PWM Channel 5 Duty Register R/W (0x00) 91
PWMDTY6 (0xA06) PWM Channel 6 Duty Register R/W (0x00) 91
PWMDTY7 (0xA0A7) PWM Channel 7 Duty Register R/W (0x00) 91
PWMDTY8 (0xA0A8) PWM Channel 8 Duty Register R/W (0x00) 91
PWMDTY9 (0xA0A9) PWM Channel 9 Duty Register R/W (0x00) 91
PWMDTY10 (0xA0AA) PWM Channel 10 Duty Register R/W (0x00) 91
PWMDTY11 (0xA0AB) PWM Channel 11 Duty Register R/W (0x00) 92
PWMDTY12 (0xA0AC) PWM Channel 12 Duty Register R/W (0x00) 92
PWMDTY13 (0xA0AD) PWM Channel 13 Duty Register R/W (0x00) 92
PWMDTY14 (0xA0AE) PWM Channel 14 Duty Register R/W (0x00) 92
PWMDTY15 (0xA0AF) PWM Channel 15 Duty Register R/W (0x00) 92

18. Buzzer and Melody Controller 93
NTAFRQL (0xA040) Note A Frequency Register R/W (0x00) 93
NTAFRQH (0xA041) Note A Frequency Register R/W (0x00) 93
NTADUR (0xA042) Note A Duration Register R/W (0x00) 93
NTAPAU (0xA043) Note A Pause Register R/W (0x00) 93
NTBFRQL (0xA044) Note B Frequency Register R/W (0x00) 93
NTBFRQH (0xA045) Note B Frequency Register R/W (0x00) 94
NTBDUR (0xA046) Note B Duration Register R/W (0x00) 94
NTBPAU (0xA047) Note B Pause Register R/W (0x00) 94
NTPOW (0xA049) Note Power On Window Register R/W (0x00) 94
NTTU (0xA04A) Note Time Unit Register R/W (0x00) 94
BZCFG (0xA048) Buzzer Configure Register R/W (0x00) 94

19. Core Regulator and Low Voltage Detection 96
REGTRM (0xA000) Regulator Trim Register R/W (0x80) TB protected 96
LVDCFG (0xA010) Supply Low Voltage Detection Configuration Register R/W (0x08) TB Protected except bit 0 LVTIF 96
LVDTHD (0xA011) Supply Low Voltage Detection Threshold Register R/W (0bx1111111) TB Protected 97
LVDHYS (0xA012) Supply Low Voltage Detection Threshold Hysteresis Register R/W (0x00) TB Protected 97

20. IOSC and SOSC 98

IOSCITRM (0xA001) IOSC Coarse Trim Register R/W (0x01) TB Protected 98
IOSCVTRM (0xA002) IOSC Fine Trim Register R/W (0x80) TB Protected 98
SOSCTRM (0xA007) SOSC Trim Register R/W (0x08) TB Protected 99
CLKOUT (0xA006) Clock Out Control Register R/W (0x00) 99

21. 12-Bit SAR ADC (ADC) 100
ADCCFG (0xA9) ADC Configuration Register R/W (0x00) 100
ADCCTLA (0xCE) ADC Control Register A R/W (0x00) 101
ADCCTLB (0xB9) ADC Control Register B R/W (0x00) 101
ADCL (0xBA) ADC Result Register Low Byte RO (0xXX) 102
ADCH (0xBB) ADC Result Register High Byte RO (0xXX) 102

22. Analog Comparators (ACMP) and 8-bit DAC 103
CMPCFGAB (0xA038) Analog Comparator A/B Configuration Register R/W (0x00) 103
CMPCFGCD (0xA039) Analog Comparator C/D Configuration Register R/W (0x00) 104
CMPVTH0 (0xA03A) Analog Comparator Threshold Control Register R/W (0x00) 104
CMPVTH1 (0xA03B) Analog Comparator Threshold Control Register R/W (0x00) 104
CMPST (0xA03D) Analog Comparator Status Register R/W (0x00) 105
DACCFG (0xA03C) Analog Comparator Status Register R/W (0x00) 105

23. Touch Key Control III 106
TK3CFGA (0xA018) TK3 Configuration Register A R/W (0x00) 107
TK3CFGB (0xA019) TK3 Configuration Register B R/W (0x00) 107
TK3CFGC (0xA01A) TK3 Configuration Registers C R/W (0x00) 108
TK3CFGD (0xA01B) TK3 Configuration Registers D R/W (0x00) 109
TK3CFGE (0xA00C) TK3 Configuration Register E R/W (0x00) 109
TK3HDTYL (0xA01C) TK3 High Duty Count Register L RO (0x00) 110
TK3HDTYH (0xA01D) TK3 High Duty Count Register H RO (0x00) 110
TK3LDTYL (0xA01E) TK3 Low Duty Count Register L RO (0x00) 110
TK3LDTYH (0xA01F) TK3 Low Duty Count Register H RO (0x00) 110
TK3BASEL (0xA028) TK3 Baseline Register L R/W (0x00) 110
TK3BASEH (0xA029) TK3 Baseline Register H R/W (0x00) 110
TK3THDL (0xA02A) TK3 Threshold Register L R/W (0x00) 110
TK3THDH (0xA02B) TK3 Threshold Register H R/W (0x00) 110
TK3PU (0xA02C) TK3 DC Pull-Up Control Register R/W (0x00) 110

24. Active Proximity Sensor 112
APSCFGA (0xA008) Active Proximity Sensor Configuration Register A R/W (0x00) 112
APSCFGB (0xA009) Active Proximity Sensor Configuration Register B R/W (0x78) 113
APSCFGC (0xA00A) Active Proximity Sensor Configuration Register C R/W (0x27) 113
APSCFGD (0xA00B) Active Proximity Sensor Configuration Register D R/W (0x07) 114

25. GPIO Multi-Function Select and Pin Interrupt 115
IOCFGO (0xA100 – 0xA10F) IO Buffer Output Configuration Registers R/W (0x00) 115
IOCFGI (0xA110 – 0xA11F) IO Buffer Input Configuration Registers R/W (0x00) 115
MFCFG (0xA120 – 0x A12F) Port Multi-Function Configuration Registers R/W (0x00) 116

1. PIN Description

PIN#	Name	Description
10	P04	General purpose IO pin 0.4
11	P03	General purpose IO pin 0.3
12	P02	General purpose IO pin 0.2
13	P01	General purpose IO pin 0.1
14	P00	General purpose IO pin 0.0
23	P12/P13/P14	General purpose IO pin 1.2, 1.3 or 1.4
22	P15	General purpose IO pin 1.5
21	P16	General purpose IO pin 1.6
20	P17	General purpose IO pin 1.7. Also serves as CREF for touch key controller
1~5, 26~34, 37~40	OUT1~OUT18	LED driver output LED current sink channels 1~18 LED driver's push-pull outputs for driving LEDs Output current capability and number of outputs: 60mA x 18 outputs, tolerance voltage 40V
15, 19	VSS	GND pin for MCU
6, 25, 35, 36	VSSO	GND pin for LED driver control logic
7	REXT	Input pin. It is connected to an external resistor to set the LED driver's global output current
8	SDB	Shutdown LED driver when pulled low
24	INTB/P11	Interrupt output pin of LED driver. LED Open Detect Enable register 0x14 can set the function of the INTB pin and active low when the interrupt event happens. This pin is internally connected to MCU GPIO P11, so INTB status can be read through MCU P11. INTB pin will be floating if the interrupt function is not used and can be applied as a GPIO pin
9	VDD	Power supply of LED driver: 2.7V ~ 5.5V
17	VDD	Power supply of MCU: 2.7V ~ 5.5V
16	VDDC	1.5V internal regulator output; 0.1uF/1uF capacitors connected to VSS are required
18	RSTN	Reset with on-chip pull-up resistor
	Thermal Pad	Need to connect to GND pin

Table 1-1 PIN Description

2. PIN Description and Multi-function Table

Name	Type	ANIO1	ANIO2	Pin Description
P00	IO/A	KEY	ADCHA	Port 0.0 I/O with multi-function. This pin also defaults to I2CS SDA for ISP
P01	IO/A	KEY	ADCHB	Port 0.1 I/O with multi-function. This pin also defaults to I2CS SCL for ISP
P02	IO/A	KEY	DAC	Port 0.2 I/O with multi-function.
P03	IO/A	KEY	CMPA	Port 0.3 I/O with multi-function.
P04	IO/A	KEY	CMPB	Port 0.4 I/O with multi-function.
P12	IO/A	KEY	SHIELD	Port 1.2 I/O with multi-function. P12/P13/P14 are connected to PIN 23 of IS31CS8979.
P13	IO/A	KEY	CMPTH	Port 1.3 I/O with multi-function.
P14	IO/A	KEY	CMPD	Port 1.4 I/O with multi-function.
P15	IO/A	KEY	CMPC	Port 1.5 I/O with multi-function.
P16	IO/A	KEY	CMPB	Port 1.6 I/O with multi-function.
P17	IO/A	CREF	CMPA	Port 1.7 I/O with multi-function. Also serves as CREF for touch key controller
P10	IO/A	KEY	ADCHA	Port 1.0 I/O with multi-function. Internal pin which is connected with LED driver I^2C SCL pin.
P11	IO/A	KEY	ADCHB	Port 1.1 I/O with multi-function. Internal pin which is connected with LED driver INTB pin
P20	IO/A	KEY	SHIELD	Port 2.0 I/O with multi-function. Internal pin which is connected with LED driver I^2C SDA pin.
P23	IO/A	KEY	CMPA	Port 2.3 I/O with multi-function. Internal pin which is connected with LED driver ADDR2 pin
P24	IO/A	KEY	CMPB	Port 2.4 I/O with multi-function. Internal pin which is connected with LED driver ADDR1 pin

Table 2-1 Pin Description

Each GPIO pin can use MFCFG register to select pin functions. The function table is shown as the following table.

MFCFG[5-0]	Function Name	Function Description
00000	LOW	This forces the output to logic low state. Actual output depends on OPOL setting in IOCFG register.
000001	GPIO	8051 GPIO port
000010	SCK	SPI SCK input or output depends on SPI MS setting.
000011	SDI	SPI SDI input corresponds to MI or SI depending on SPI MS setting.
000100	SDO	SPI SDO output corresponds to MO or SO depending on SPI MS setting.
000101	SSN	SPI SSN input or output depends on SPI MS setting.
000110	SSCL	I^2C Slave SCL I/O
000111	SSDA	I^2C Slave SDA I/O
001000	MSCL	I^2C Master SCL I/O
001001	MSDA	I^2C Master SDA I/O
001010	TX1	EUART1 TX output
001011	RX1	EUART1 RX input
001100	TX2	EUART2/LIN TX output
001101	RX2	EUART2/LIN RX input
001110	BZ	Buzzer/Melody output

MFCFG[5-0]	Function Name	Function Description
001111	XCLK	External system clock input
010000	T0	Timer 0 input
010001	T1	Timer 1 input
010010	T2	Timer 2 input
010011	IDX	Quadrature Encoder IDX (Index) input
010100	PHA	Quadrature Encoder PHA (Phase A) input
010101	PHB	Quadrature Encoder PHA (Phase B) input
010110	XCAPT	TCC (Timer Compare/Capture) Capture Input
010111	TC	TCC (Timer Compare/Capture) Terminal Count output
011000	CC	TCC (Timer Compare/Capture) Compare Count output
011001	PWM0	PWM Channel 0 output
011010	PWM1	PWM Channel 1 output
011011	PWM2	PWM Channel 2 output
011100	PWM3	PWM Channel 3 output
011101	PWM4	PWM Channel 4 output
011110	PWM5	PWM Channel 5 output
011111	HIGH	This forces the output to logic high state. Actual output depends on OPOL setting in IOCFG register
100000	PSTX	Proximity Sensor TX output
100001	CLKO	Clock Output
100010	PWM8-L	PWM8 left output
100011	PWM8-R	PWM8 right output

Table 2-2 Multifunction Configuration

**** MFCFG[5-0] default is 000000 after reset, thus default state is output logic low.

Note:

1. There are 9 channels of PWM. The even channel is left-aligned and the odd channel is right-aligned. And the two of continuous even and odd channels are grouped to map to two GPIO as follows. Each can be selected to be even or odd aligned by PWML and PWMR.
2. GPIO00 and GPIO01 are mapped to PWM0 and PWM1.
3. GPIO02 and GPIO03 are mapped to PWM2 and PWM3.
4. GPIO04 is mapped to PWM4.
5. GPIO14 and GPIO15 are mapped to PWM12 and PWM13.
6. GPIO16 and GPIO17 are mapped to PWM14 and PWM15.

3. Typical Application Diagram and Circuit

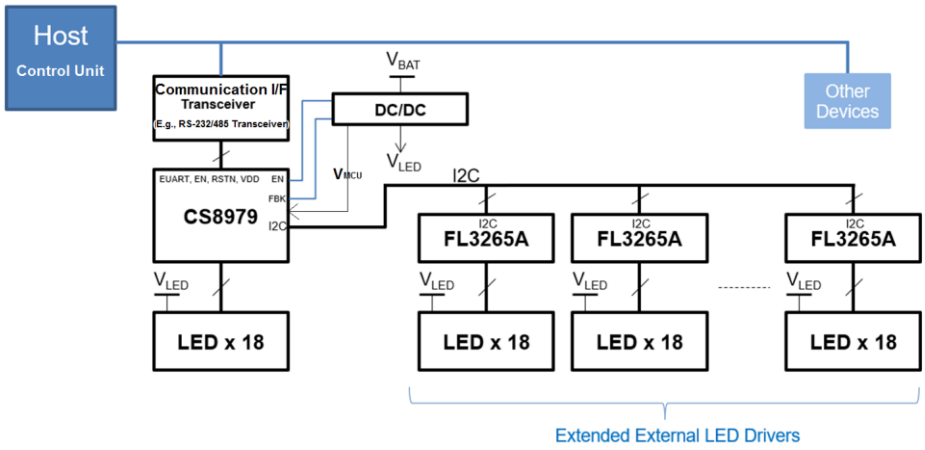

Figure 3-1 IS31CS8979 typical application diagram

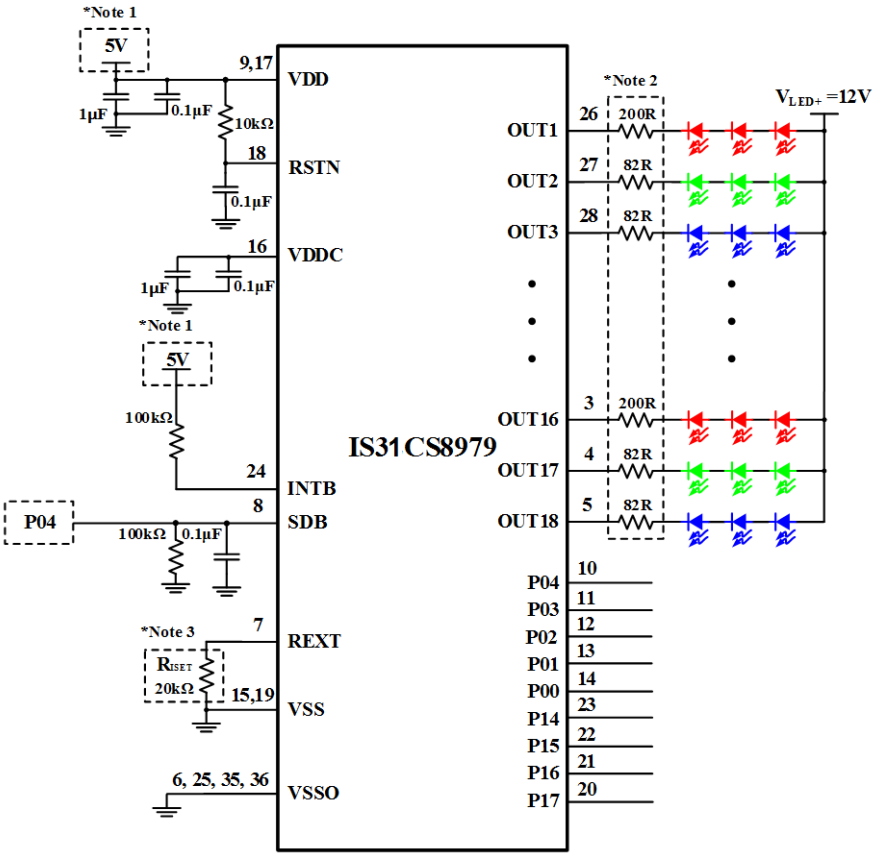

Figure 3-2 IS31CS8979 typical application circuit

Note:

1. VDD should be from 3V to 5V.
2. These resistors are for offloading the thermal dissipation (I2R) away from the IS31CS8979.
3. The maximum global output current is set by external resistor, RISET. Please refer to the application information in RISET section.
4. SDB pin can be connected to another MCU GPIO pin or IS31CS8979 GPIO pin like P04 to control the LED driver of IS31CS8979. If the LED driver doesn't need shutdown, SDB pin should be connected to VDD.
5. The IC and LED string should be placed far away from any local antenna in order to prevent EMI contamination.

4. LED Driver

4.1 I²C Application

4.1.1 I²C Interface

The IS31CS8979 uses an internal serial bus, which conforms to the I²C protocol, to control the chip's LED driver with two wires: SCL and SDA. For I²C access implementation, please refer to "BLOCK DIAGRAM". Internal GPIO ports of the MCU inside IS31CS8979 can be configured as an I²C master to communicate with the LED drivers inside or external devices. The software can switch between different GPIO ports to access different I²C addresses. The IS31CS8979 has a 7-bit slave address (A7:A1), followed by the R/W bit, A0. Set A0 to "0" for a write command and set A0 to "1" for a read command. The value of bits A1 and A2 are decided by the connection of the ADDR1/2 pins. The complete slave address is:

No.	ADDR2	ADDR1	A7:A5	A4:A3	A2:A1	A0
#1	GND	GND	100	00	00	0/1
#2	GND	SCL		00	01	
#3	GND	SDA		00	10	
#4	GND	VCC		00	11	
#5	SCL	GND		01	00	
#6	SCL	SCL		01	01	
#7	SCL	SDA		01	10	
#8	SCL	VCC		01	11	
#9	SDA	GND		10	00	
#10	SDA	SCL		10	01	
#11	SDA	SDA		10	10	
#12	SDA	VCC		10	11	
#13	VCC	GND		11	00	
#14	VCC	SCL		11	01	
#15	VCC	SDA		11	10	
#16	VCC	VCC		11	11	

Table 4-1 Slave Address

ADDR1/2 connected to GND, (A2:A1)/(A4:A3)=00;

ADDR1/2 connected to VCC, (A2:A1)/(A4:A3)=11;

ADDR1/2 connected to SCL, (A2:A1)/(A4:A3)=01;

ADDR1/2 connected to SDA, (A2:A1)/(A4:A3)=10;

Note 1: If there is only one IS31CS8979 on I²C bus, above address #1 to address #16 can be used.

Note 2: If there are 2 to 12 IS31CS8979 devices on I²C bus, it is recommended to use addresses #2, #4 to #8, #10, and #12 to #16 (Do not use addresses #1, #3, #9 and #11).

Note 3: If there are 13 to 15 IS31CS8979 devices on I²C bus, it is recommended to use addresses #2 to #16 (do not use address #1).

IS31CS8979 cannot support 16 slave addresses on a single I²C bus. Please contact Lumissil if you have further questions.

The SCL line is uni-directional. The SDA line is bi-directional (open-drain) with a pull-up resistor (typically 2kΩ). The maximum clock frequency specified by the I²C standard is 1MHz (Fast-mode plus). In this discussion, the master is the host controller and the slave is the IS31CS8979.

The timing diagram for the I²C is shown in Figure 4-1. The SDA is latched in on the stable high level of the SCL. When there is no interface activity, the SDA line should be held high.

The “START” signal is generated by lowering the SDA signal while the SCL signal is high. The start signal will alert all devices attached to the I²C bus to check the incoming address against their own chip address.

The 8-bit chip address is sent next, the most significant bit first. Each address bit must be stable while the SCL level is high.

After the last bit of the chip address is sent, the master checks for the IS31CS8979’s acknowledge. The master releases the SDA line high (through a pull-up resistor). Then the master sends an SCL pulse. If the IS31CS8979 has received the address correctly, then it holds the SDA line low during the SCL pulse. If the SDA line is not low, then the master should send a “STOP” signal (discussed later) and abort the transfer.

Following the acknowledge of IS31CS8979, the register address byte is sent, the most significant bit first. IS31CS8979 must generate another acknowledge indicating that the register address has been received.

Then 8-bit of data byte are sent next, the most significant bit first. Each data bit should be valid while the SCL level is stable high. After the data byte is sent, the IS31CS8979 must generate another acknowledge to indicate that the data was received.

The “STOP” signal ends the transfer. To signal “STOP”, the SDA signal goes high while the SCL signal is high.

4.1.2 Address Auto Increment

To write multiple bytes of data into IS31CS8979, load the address of the data register that the first data byte is intended for. During the IS31CS8979 acknowledge of receiving the data byte, the internal address pointer will increment by one. The next data byte sent to IS31CS8979 will be placed in the new address, and so on. The auto-increment of the address will continue as long as data continues to be written to IS31CS8979 (Figure 4-4 Writing to IS31CS8979 (Automatic Address Increment)).

4.1.3 Read Operation

All of the registers can be read (Table 4-2 LED Register Function).

To read the register, after I²C start condition, the bus master must send the IS31CS8979 device address with the R/$\overline{W}$ bit set to “0”, followed by the register address which determines which register is accessed. Then restart I²C, the bus master should send the IS31CS8979 device address with the R/$\overline{W}$ bit set to “1”. Data from the register defined by the command byte is then sent from the IS31CS8979 to the master (Figure 4-5 Reading from IS31CS8979).

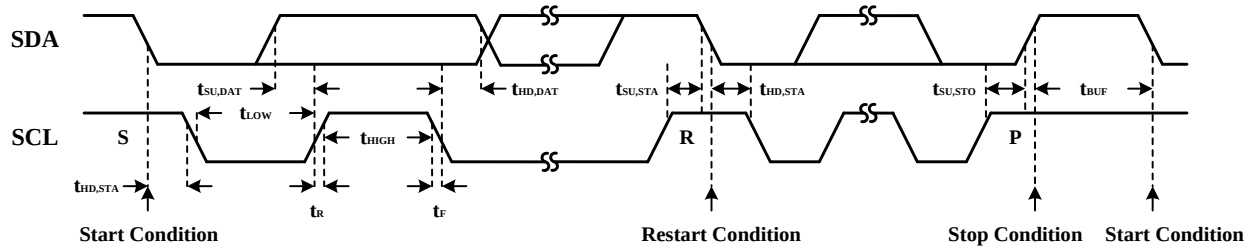

Figure 4-1 I²C Interface Timing

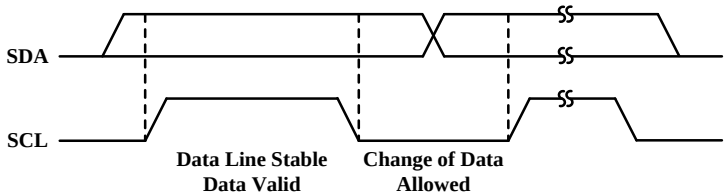

Figure 4-2 I²C Bit Transfer

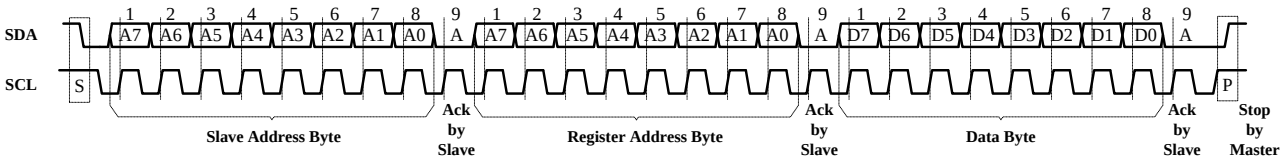

Figure 4-3 Writing to IS31CS8979 (Typical)

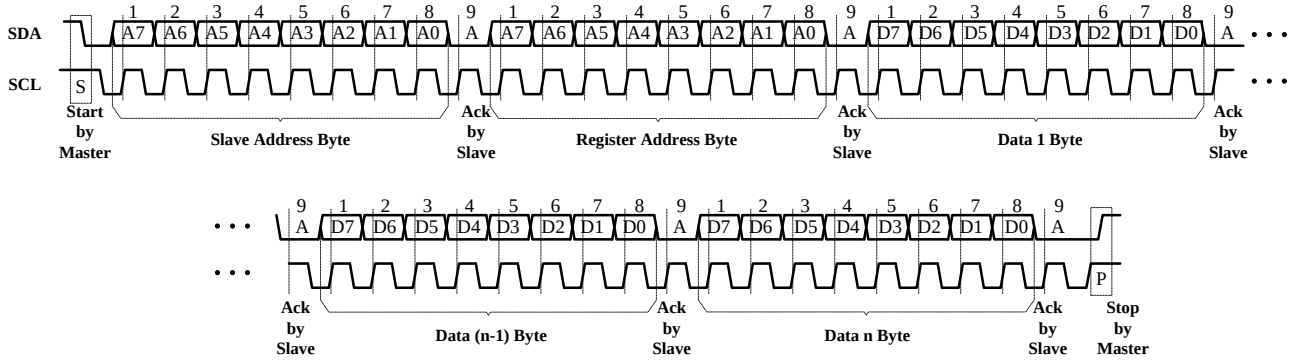

Figure 4-4 Writing to IS31CS8979 (Automatic Address Increment)

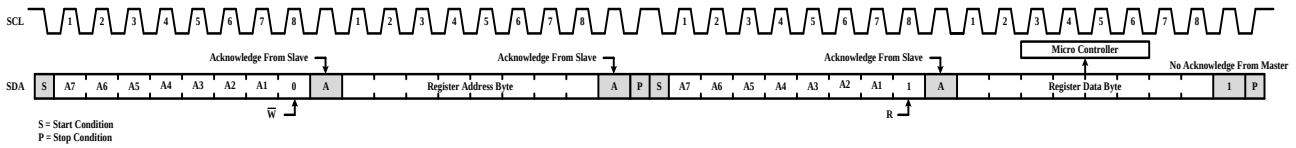

Figure 4-5 Reading from IS31CS8979

4.2 LED Register Definitions

Address	Name	Function	Table	Default	R/W
0x00	Configuration Register	Power control register	3	0000 0000	R/W
0x01	Global Current Control Register	Control Global DC current	4	0011 1111	R/W
0x02~0x13	Scaling Register	Control each channel's DC current	5	1111 1111	R/W
0x14	Open Detect Enable Register	Open detect enable	6	0000 0011	R/W
0x15~0x17	LED Open Status Register (Read Only)	Open information	7	0000 0000	R
0x18	Temperature Sensor Register	Temperature information	8	0000 0000	R/W
0x19	Spread Spectrum Register	Spread spectrum control register	9	0000 0000	R/W
0x1A~0x1C	DC PWM Register	Disable PWM function	10	0000 0000	R/W
0x1D~0x1E	Phase Delay and Clock Phase Register	Phase Delay and Clock Phase	11	0000 0000	R/W
0x1F~0x30	PWM Register	Channel [18:1] PWM register byte	12	0000 0000	R/W
0x31~0x33	Blinking Enable Register	Enable Blinking state for each LED	13	0000 0000	R/W
0x34	Blinking Frequency Register	Blinking frequency setting	14	0000 0000	R/W
0x35	Blinking Duty Cycle Register	Blinking duty cycle setting	15	0000 0000	R/W
0x36	Scaling Update Register	Update the scaling registers	-	0000 0000	R/W
0x37	Update Register	Update the PWM and blinking registers	-	0000 0000	W
0x3F	Reset Register	Reset all registers	-	0000 0000	R/W

Table 4-2 LED Register Function

0x00 Configuration Register

	D7	D6	D5	D4	D3	D2:D1	D0
Name	-	LGC	CM	PFS	-	SYNC	SSD
Default	0	0	0	0	0	00	0

The Configuration Register sets high/low logic, current multiplier, PWM frequency, synchronization mode, and software shutdown mode for the IS31CS8979.

When D0 SSD bit is “0”, the IS31CS8979 is in software shutdown mode. For normal operation, the SSD bit should be set to “1”.

D2:D1 SYNC bits configure the device into Master or Slave mode. The CLKIO pin has an internal weak pulldown resistor. When the SYNC bits are “10”, the CLKIO pin is configured as the master and will output a clock signal for distribution to the slave-configured devices. To be configured as a slave device and accept an external clock input, the slave device’s SYNC bits must be set to “11”. The CLKIO clock is only used for synchronizing the blink function, and CLKIO frequency is the same as the blinking setting from 24Hz to 10.66s. There should only be one master and all other CLKIO connected devices should first be configured in slave mode before the master is configured as master mode.

The D4 PFS bit sets the operating PWM frequency, and the default PWM frequency is 25kHz with PFS set to “0”. When PFS is set to “1”, the PWM frequency will be changed to 200Hz.

D5 CM bit is a current multiplier of all output’s current. When CM bit is set to “0”, IOUT(MAX) follows the equation below or refer to RISET section in Application Information.

$$I_{OUT(MAX)} = x \cdot \frac{V_{ISET}}{R_{ISET}} \quad (1)$$

x = 408, VISET = 1V

When CM bit is set to “1”, the output current will become 1/8 of the above setting, which is:

$$I_{OUT(MAX)} = \frac{x}{8} \cdot \frac{V_{ISET}}{R_{ISET}} \quad (2)$$

x = 408, VISET = 1V

For applications of IOUT(MAX)=6mA~60mA, CM bit should be set to “0”.

For applications of IOUT(MAX)=0~7.5mA, recommend setting CM bit to “1” to ensure good ΔIMAT and ΔIOUT.

When D6 LGC bit is set to “1”, the high/low logic will be changed to 2.4V/0.6V.

SSD	Software Shutdown Control 0 Software shutdown 1 Normal operation
SYNC	Master or slave 00/11 No function, CLKIO pull-low 10 Master and CLKIO have square wave output, and CLKIO frequency is the same as the blinking frequency 11 Slave and CLKIO is clock input
PFS	PWM frequency setting 0 25kHz 1 200Hz
CM	Current multiplier 0 For application of IOUT(MAX)=6~60mA 1 For application of IOUT(MAX)=0~7.5mA
LGC	H/L logic 0 1.4V/0.4V 1 2.4V/0.6V

0x01 Global Current Control Register

Bit	D7:D6	D5:D0
Name	-	GCC
Default	00	11 1111

GCC and scaling register SL control the IOUT as shown in equation (3).

$$I_{OUT} = I_{OUT(MAX)} \times \frac{GCC}{32} \times \frac{SL}{256} \quad (3)$$

If GCC ≤ 31(’01 1111’),

$$GCC = \sum_{n=0}^{5} D[n] \cdot 2^n \quad (4)$$

If GCC ≥ 32('10 0000'), GCC=32.

IOUT(MAX) is the maximum output current decided by RISET. (Check RISET section for more information.)

The IOUT of each channel is set by the SL bits of LED Scaling Register (0x02~0x13). Please refer to the detailed information in 0x02~0x13 Scaling Register.

If GCC=0x05, SL=0xFF, GCC ≤ 31 so GCC=5,

$$I_{OUT} = I_{OUT(MAX)} \times \frac{5}{32} \times \frac{255}{256} \quad (5)$$

If GCC=0x2F, SL=0xFF, GCC ≥ 32 so GCC=32,

$$I_{OUT} = I_{OUT(MAX)} \times \frac{255}{256} \quad (6)$$

0x02~0x13 Scaling Register

Bit	D7:D0
Name	SL[7:0]
Default	1111 1111

Each output has 8 bits to modulate DC current in 256 steps.

The value of the SL Registers scales the I_{OUT} current of each output channel.

I_{OUT} is computed by equation (7):

$$I_{OUT} = I_{OUT(MAX)} \times \frac{GCC}{32} \times \frac{SL}{256} \quad (7)$$

$I_{OUT(MAX)}$ is the maximum output current set by R_{ISET}. GCC bits D5~D0 are the global current setting bits. SL D7~D0=0x00 is the default value, resulting in no LED current. For LEDs to be functional, please program these bits to a value from 0x01 to 0xFF.

Scaling Registers 0x02~0x13 must be updated by writing to the Scaling Update Register 0x36. For DC mode (PWM disabled), each register will be updated immediately when it is written. For PWM mode, each register will be updated at the PWM falling edge, except the first PWM cycle.

0x14 Open Detect Enable Register

Bit	D7:D2	D1	D0
Name	-	ODF	ODE
Default	00000	1	1

ODE enables Open LED detection and stores this open information in LED Open status registers 0x15~0x17. The open information will continue updating until detection is disabled by writing "0" to ODE. Writing a '1' to ODF bit enables reporting of the open information on the INTB pin. When ODF is "1", any detected open LED condition on OUT1~OUT18 will cause the INTB pin to go logic low.

ODE Open Detect Enable
0 Detect disable
1 Detect enable

ODF Open Detect Flag
0 Report disable
1 Report enable

0x15 LED Open Status Register 1

Bit	D7	D6:D4	D3	D2:D0
Name	-	OP[6:4]	-	OP[3:1]
Default	0	000	0	000

0x16 LED Open Status Register 2

Bit	D7	D6:D4	D3	D2:D0
Name	-	OP[12:10]	-	OP[9:7]
Default	0	000	0	000

0x17 LED Open Status Register 3

Bit	D7	D6:D4	D3	D2:D0
Name	-	OP[18:16]	-	OP[15:13]
Default	0	000	0	000

Open status registers 0x15~0x17 are updated if there is an open LED condition and if the bit ODE of register 0x14 was set to “1”. Register 0x15~0x17 will be cleared upon reading the register.

OPx Open Information of OUT18:OUT1
0 No LED open detected
1 LED open detected

0x18 Temperature Status Register

Bit	D7	D6	D5	D4	D3:D2	D1:D0
Name	TSDDE	TRDE	TSDF	TF	TROF	TS
Default	0	0	0	0	00	00

This register stores the temperature point of the IC. When TF=1, the IC die temperature has exceeded the temperature point. When thermal shutdown happens, the TSDF will set to “1” to flag the thermal shutdown has occurred.

Write register 0x18 with 0xC0 to enable readback if the die temperature has or has not exceeded the set point.

TS Temperature Point, Thermal roll-off start point
00 140℃
01 120℃
10 100℃
11 90℃

TROF Percentage of output current before thermal shutdown happens
00 100%
01 75%
10 55%
11 30%

TF Temperature Flag
0 Not reach the set point
1 Reach the set point

TSDF Thermal Shutdown Flag
0 No thermal shutdown happened
1 Thermal shutdown happened

TRDE Thermal roll off Detect Enable
0 Disable the thermal roll off detect, and thermal roll off information will not be stored in TF
1 Enable the thermal roll off detect, and thermal roll off information will be stored in TF

TSDDE Thermal Shutdown Detect Enable
0 Disable thermal shutdown detect, and thermal shutdown information will not be stored in TSDF
1 Enable thermal shutdown detect, and thermal shutdown information will be stored in TSDF

0x19 Spread Spectrum Register

Bit	D7:D5	D4	D3:D2	D1:D0
Name	-	SSP	RNG	CLT
Default	000	0	00	00

This register enables the spread spectrum function, and adjusts the cycle time and range.

SSP Spread Spectrum Enable
0 Disable
1 Enable

CLT Spread Spectrum Cycle Time
00 1980μs
01 1200μs
10 820μs
11 660μs

RNG Spread Spectrum Range
00 ±5%
01 ±15%
10 ±24%
11 ±34%

0x1A DC PWM Register (PWM=256/256)

Bit	D7	D6:D4	D3	D2:D0
Name	-	DP[6:4]	-	DP[3:1]
Default	0	000	0	000

0x1B DC PWM Register (PWM=256/256)

Bit	D7	D6:D4	D3	D2:D0
Name	-	DP[12:10]	-	DP[9:7]
Default	0	000	0	000

0x1C DC PWM Register (PWM=256/256)

Bit	D7	D6:D4	D3	D2:D0
Name	-	DP[18:16]	-	DP[15:13]
Default	0	000	0	000

When DPx bit is set to 1, the associated OUTx PWM will become 256/256. The OUTx current is a DC value, not PWM controlled.

DPx DC PWM command of OUT18~OUT1
0 PWM decided by Registers 0x1F-0x30
1 no PWM, DC output

0x1D Phase Delay and Clock Phase Register

Bit	D7	D6:D4	D3:D1	D0
Name	-	PS[3:1]	-	PDE
Default	0	000	000	0

0x1E Phase Delay and Clock Phase Register

Bit	D7	D6:D4	D3	D2:D0
Name	-	PS[9:7]	-	PS[6:4]
Default	0	000	0	000

IS31CS8979 features a 9 phase delay function enabled by PDE bit.

PDE Phase Delay Enable
0 Phase delay disable

1 Phase delay enable

PSx Phase select

0 OUTx x2 Phase delay 0 degree. PS1 is for OUT1 &OUT2, PS2 is for OUT3 & OUT4

1 OUTx x2 Phase delay 180 degree. PS1 is for OUT1 &OUT2, PS2 is for OUT3 & OUT4

0x1F-0x30 PWM Register

Bit	D7:D0
Name	PWM
Default	0000 0000

Each OUTx has 1 byte to modulate the PWM duty cycle in 256 steps.

The value of the PWM Registers decides the average current of each OUTx LED, i.e., ILED.

ILED is computed by equation (8):

$$I_{LED} = \frac{PWM}{256} \times I_{OUT} \quad (8)$$

$$PWM = \sum_{n=0}^{7} D[n] \cdot 2^n \quad (9)$$

$$I_{OUT} = I_{OUT(MAX)} \times \frac{GCC}{32} \times \frac{SL}{256} \quad (10)$$

Where $I_{OUT(MAX)}$ is the maximum output current decided by R_{ISET}, GCC is the global current setting(GCC), and SL is the 8-bit scaling of each output.

For example, if the data in OUT1 PWM register is “0000 0100”, then the associated PWM is the fourth step (4/256).

0x31 Blinking Enable Register

Bit	D7	D6:D4	D3	D2:D0
Name	-	BP[6:4]	-	BP[3:1]
Default	0	000	0	000

0x32 Blinking Enable Register

Bit	D7	D6:D4	D3	D2:D0
Name	-	BP[12:10]	-	BP[9:7]
Default	0	000	0	000

0x33 Blinking Enable Register

Bit	D7	D6:D4	D3	D2:D0
Name	-	BP[18:16]	-	BP[15:13]
Default	0	000	0	000

The Blinking Enable Registers store the Blinking mode enable bit of each OUTx channel. The data sent to the registers will be stored in the temporary registers only, and a write operation of “0000 0000” value to the Update Register (0x37) is required to update it.

BPx Blinking Enable Bit

0 PWM Mode

1 Blinking Mode

0x34 Blinking Frequency Register

Bit	D7:D0
Name	BLF
Default	0000 0000

The Blinking Frequency Register stores the blinking frequency of the outputs. The blinking period is controlled through 256 linear steps from 0x00 (41ms, frequency 24Hz) to 0xFF (10.66s). Blinking frequency is computed by:

Blinking frequency (Hz) = 24/(BLF[7:0] + 1)

The data sent to the Blinking Frequency Register will be stored in the temporary bits, and a write operation of “0000 0000” value to the Update Register (0x37) is required to update it.

0x35 Blinking Duty Cycle Register

Bit	D7:D0
Name	BLD
Default	0000 0000

The Blinking Duty Cycle Register stores blinking duty cycle information (ON/OFF ratio in %). The blinking duty cycle can be linearly programmed from 0% (BLD=0x00) to 99.6% (BLD=0xFF). Blinking duty cycle is computed by:

Blinking duty cycle = BLD[7:0] / 256

The data sent to the Blinking Duty Cycle Register will be stored in the temporary bits, and a write operation of “0000 0000” value to the Update Register (0x37) is required to update it.

0x36 Scaling Update Register

A Write of 0x00 to the Scaling Update Register is required to update the Scaling Registers (0x02~0x13) values.

0x37 Update Register

A Write of 0x00 to Update Register is required to update the PWM Registers and Blinking Frequency Register/ Blinking Duty Cycle Register (0x1F~0x30, 0x34~0x35) values.

0x3F Reset Register

A write of 0xAE to the Reset Register will reset all the IS31CS8979 registers to their default values. On initial power-up, the IS31CS8979 registers are reset to their default values for a blank display. A write of “1” to the SSD bit in the Configuration Register 0x00 is required to enable the IS31CS8979 since the SSD default value is “0” or software shutdown.

5. Application Information

5.1 R_{ISET}

The maximum output current $I_{OUT(MAX)}$ of OUT1~OUT18 can be adjusted by the external resistor, R_{ISET}, as described in equation (11).

$$I_{OUT(MAX)} = x \cdot \frac{V_{ISET}}{R_{ISET}} \quad (11)$$

x = 408, V_{ISET} = 1V.

The max IOUT result is based on the register settings as below (CM is D5 bit of Configuration Register(0x00)):

When CM= “0”, GCC= 0x20, Scaling= 0xFF, PWM= 0xFF

The recommended minimum value of R_{ISET} is 6.8kΩ.

When R_{ISET}=20kΩ, $I_{OUT(MAX)}$=20.4mA.

When R_{ISET}=6.8kΩ, $I_{OUT(MAX)}$=60mA.

When CM= “1”, GCC= 0x20, Scaling= 0xFF, PWM= 0xFF

The output current will become 1/8 of the above setting, which is:

$$I_{OUT(MAX)} = \frac{x}{8} \cdot \frac{V_{ISET}}{R_{ISET}} \quad (12)$$

x = 408, V_{ISET} = 1V.

When RISET=20kΩ, IOUT(MAX)=2.55mA.

When RISET=6.8kΩ, IOUT(MAX)=7.5mA.

RISET should be close to pin 7 REXT and the ground side should be connected to a nearby GND plane.

5.2 Current Setting

The maximum output current is set by the external resistor RISET. The current of each output can be adjusted with the SL 8 bits of LED Scaling Register (0x02~0x13).

Some applications may require the IOUT of each channel to be adjusted independently. For example, if OUT1 drives 1 LED and OUT2 drives 2 parallel LEDs, they should have the same average LED current of 10mA. We can set RISET=20kΩ for IOUT of 20.4mA, and configure the following registers 0x01=0x20 (GCC= 32), 0x02=0x80 (Scaling OUT1), and 0x03=0xFF (Scaling OUT2). The result is that OUT1 sinks 10mA and OUT2 sinks 20.4mA which will be shared by the two LEDs in parallel (10mA each).

Another example, for an RGB LED, OUT1 is Red, OUT2 is Green, and OUT3 is Blue. With the same GCC (0x01), SL (0x02~0x13) bits and PWM value, the LED may appear pinkish, or not so white. In this case, the SL bits can be used to adjust the current of the RGB IOUTx to create a pure white color. These Scaling Registers can also be referred to as white balance registers.

5.3 PWM Control

The 18 PWM Registers (0x1F~0x30) can modulate the average LED brightness of each 18 channels with 256 steps. For example, if the data in OUT1 PWM register is “0000 0100”, then the associated PWM is the fourth step (4/256).

Continuously updating new values to the PWM registers will modulate the brightness of the LEDs to achieve a breathing effect.

5.4 PWM Frequency Select

The IS31CS8979 output channels operate with a default 8 bits PWM resolution and a PWM frequency of 200Hz or 25kHz (register selectable). Because all the OUTx channels are synchronized, the DC power supply may experience large instantaneous current surges when the OUTx channels turn ON. These current surges will generate an AC ripple on the power supply rails which will cause stress to the decoupling capacitors. When the AC ripple is applied to a monolithic ceramic capacitor chip (MLCC), it will expand and contract to cause the PCB to flex and generate an audible hum in the PWM frequency range. To avoid this hum, there are many countermeasures, such as selecting the capacitor type and value which will not cause the PCB to flex and contract.

An additional option for avoiding audible hum is to set the IS31CS8979's output PWM frequency above/below the audible range. The Control Register (0x00) can be used to set the switching frequency to 200Hz or 25kHz, to avoid the audible range.

5.5 Open Detect Function

IS31CS8979 has an open-detect bit for each LED.

By setting the ODE bit of Open Detect Enable Register (0x14) from "0" to "1" (store open information), the LED Open Register will store the open LED information, so the MCU can read LED status from registers 0x95~0x97. The open information will continue updating until ODE is set to "0". The ODF bit can be set to "1" to enable reporting of open LED information on the INTB pin. When ODF is "0", the open LED information will not be reported on the INTB pin. When ODF is "1", any OUTx with an open-detect LED will cause the INTB pin to go logic LOW.

The Global Current Control Register (0x01) needs to set to a value in the range of 0x0F~0x3F in order to correctly detect an open LED.

5.6 Spread Spectrum Function

PWM current switching of LED outputs can be particularly troublesome when Electromagnetic Interference (EMI) is of concern. To optimize EMI performance, the IS31CS8979 spread spectrum function can be enabled. By setting the RNG bit of the Spread Spectrum Register (0x19), a Spread Spectrum range can be selected from ±5% /±15% /±24% /±34%. Spread spectrum can spread the total electromagnetic emitting energy into a wider frequency range that significantly lowers the peak radiated energy. With spread spectrum enabled and proper PCB layout, it is possible to pass EMI tests that were previously difficult to pass.

5.7 Shutdown Mode

Shutdown mode can be used as a means of reducing power consumption. During shutdown mode, all registers retain their data.

5.8 Software Shutdown

By setting the SSD bit of the Control Register (0x00) to "0", the IS31CS8979 will operate in software shutdown mode. When the IS31CS8979 is in software shutdown, all current sources are switched off, so the LEDs are OFF with all registers remaining accessible. Typical current consumption of internal LED driver is 3μA (VCC=5V). The default SSD value on power-up is "0", and the SSD value needs to be set to "1" for normal operation.

5.9 Hardware Shutdown

The IS31CS8979 enters hardware shutdown when the SDB pin is pulled low. All current sources are disabled during hardware shutdown, and the typical current consumption of internal LED driver is 3μA (VCC=5V).

The IS31CS8979 exits shutdown when the SDB pin is pulled high. The rising edge of SDB pin will reset the I^2C interface module, but all the register information is retained. During hardware shutdown, the registers are accessible.

If the VCC supply drops below 1.75V but remains above 0.1V while the SDB pin is pulled low, all function Registers must be re-initialized before the SDB pin is pulled high.

6. Memory Map

There is a total of 256 bytes of internal RAM in IS31CS8979, the same as standard 8052. There is a total of 1792 bytes of auxiliary RAM allocated in the 8051 extended RAM area at 0x0100 – 0x07FF. Programs can use "MOVX" instructions to access the XRAM.

There is a 64Kx16 embedded Flash memory for code storage. For CPU program access (Read-Only), the lower byte is used for actual access, and the upper byte is used for ECC check. The ECC is performed in nibble bases with each nibble in the high byte corresponding to the nibbles in the low byte. ECC in this case is capable of one-bit correction and two-bit detection for each nibble. This is significantly more robust than 8:5 ECC. ECC check of program access is through hardware and performed automatically. The embedded Flash can also be accessed through the Flash controller. The Flash controller allows both read/write access and is always in 16-bit width with no ECC. For erase operations, the page size of the Flash is 512x16. There are two 128x16 IFB blocks in the Flash. The first IFB is used for manufacturer and calibration data, and some areas as user OTP data. The 2nd IFB is open for user applications with no restriction. Also please note that there is an 8-byte code security key located at the last 8 bytes of user program space to prevent pirate access to information.

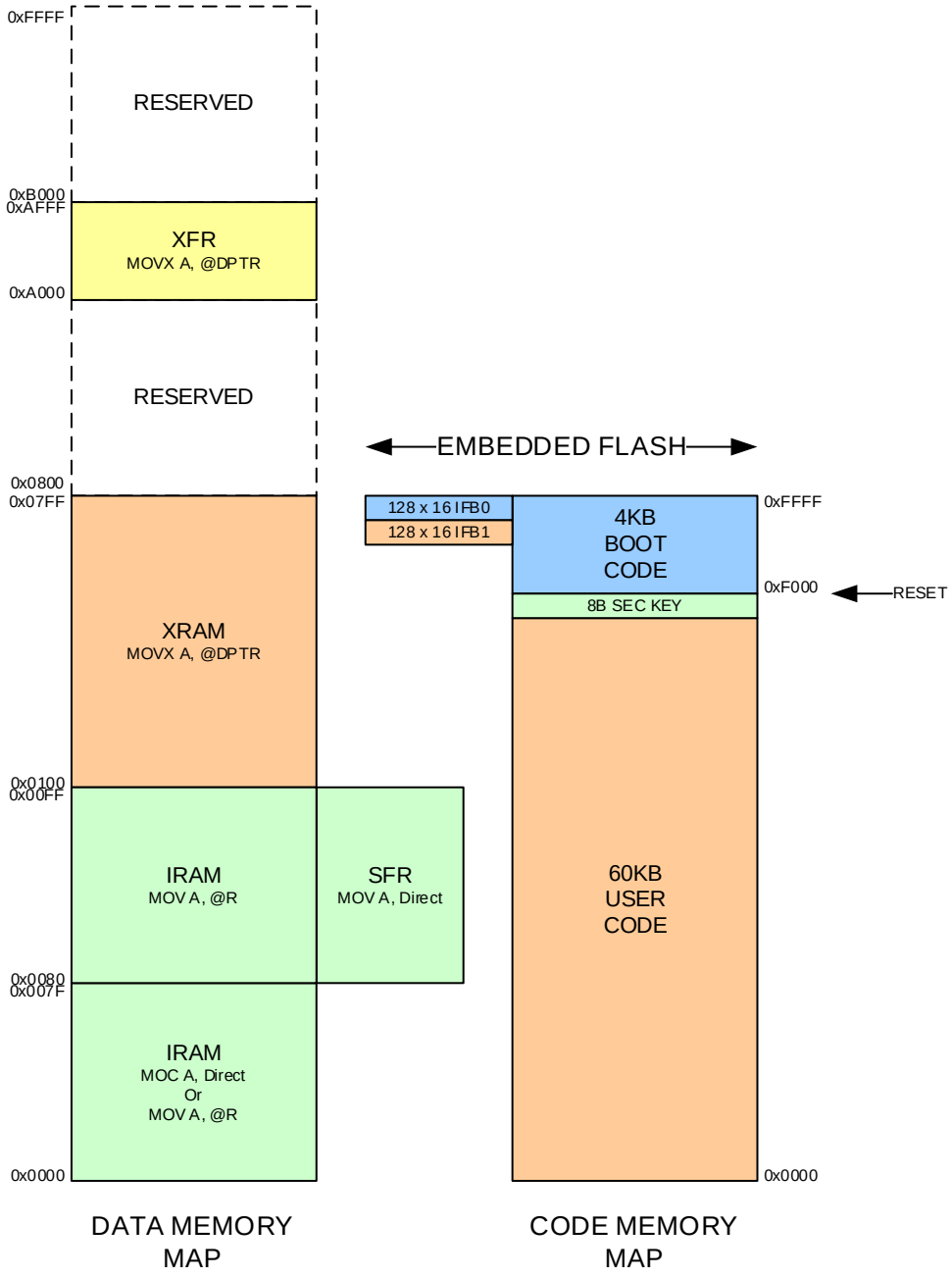

Figure 6-1 Memory Map

7. REGISTER MAP SFR (0x80 – 0xFF)

The SFR address map maintains maximum compatibilities to most existing 8051-like MCU. The following table shows the SFR address map. Since SFR can be accessed by direct addressing mode, registers of built-in peripherals that require fast access are mostly located in SFR. XFR is mainly used for on-chip peripheral control and configurations.

	0	1	2	3	4	5	6	7
0xF0	B	-	-	-	I2CMSA	I2CMCR	I2CMBUF	I2CMTP
0xE0	ACC	-	-	-	-	-	-	-
0xD0	PSW	-	-	-	-	-	-	-
0xC0	-	SBRK1	SCON2	I2CMTO	PMR	STATUS	MCON	TA
0xB0	P3	SCON1	SCN1X	SFIFO1	SBUF1	SINT1	SBR1L	SBR1H
0xA0	P2	SPICR	SPIMR	SPIST	SPIDATA	SFIFO2	SBUF2	SINT2
0x90	P1	EXIF	WTST	DPX	-	DPX1	-	-
0x80	P0	SP	DPL	DPH	DPL1	DPH1	DPS	PCON
	8	**9**	**A**	**B**	**C**	**D**	**E**	**F**
0xF8	EXIP	MD0	MD1	MD2	MD3	MD4	MD5	ARCON
0xE8	EXIE	-	MXAX	-	-	-	-	-
0xD8	WDCON	-	DPXR	I2CSCON2	I2CSST2	I2CSADR2	I2CSDAT2	I2CSADR2A
0xC8	T2CON	TB	RLDL	RLDH	TL2	TH2	ADCCTLA	T34CON
0xB8	IP	ADCCTLB	ADCL	ADCH	-	-	-	-
0xA8	IE	ADCCFG	-	-	TL4	TH4	TL3	TH3
0x98	-	-	-	ESP	-	ACON	-	WKMASK
0x88	TCON	TMOD	TL0	TL1	TH0	TH1	CKCON	CKSEL

Table 7-1 Register Map SFR(0x80-0xFF)

8. REGISTER MAP XFR (0xA000 – 0xAFFF)

	0	1	2	3	4	5	6	7
0xA000	REGTRM	IOSCITRM	IOSCVTRM	-	-	-	CLKOUT	SOSCTRM
0xA010	LVDCFG	LVDTHD	LVDHYS	-	TSTMON	FLSHVDD	BSTCMD	RSTCMD
0xA020	FLSHDATL	FLSHDATH	FLSHADL	FLSHADH	FLSHECC	FLSHCMD	ISPCLKF	FLSHPRTC
0xA030	FLSHPRT0	FLSHPRT1	FLSHPRT2	FLSHPRT3	FLSHPRT4	FLSHPRT5	FLSHPRT6	FLSHPRT7
0xA040	NTAFRQL	NTAFRQH	NTADUR	NTAPAU	NTBFRQL	NTBFRQH	NTBDUR	NTBPAU
0xA050	TCCFG1	TCCFG2	TCCFG3	-	TCPRDL	TCPRDH	TCCMPL	TCCMPH
0xA060	TCCPTRL	TCCPTRH	TCCPTFL	TCCPTFH	-	-	-	-
0xA070	QECFG1	QECFG2	QECFG3	-	QECNTL	QECNTH	QEMAXL	QEMAXH
	8	**9**	**A**	**B**	**C**	**D**	**E**	**F**
0xA008	APSCFGA	APSCFGB	APSCFGC	APSCFGD	TK3CFGE	PECCCFG	PECCADL	PECCADH
0xA018	TK3CFGA	TK3CFGB	TK3CFGC	TK3CFGD	TK3HDTYL	TK3HDTYH	TK3LDTYL	TK3LDTYH
0xA028	TK3BASEL	TK3BASEH	TK3THDL	TK3THDH	TK3PUD	DECCCFG	DECCADL	DECCADH
0xA038	CMPCFGAB	CMPCFGCD	CMPVTH0	CMPVTH1	DACCFG	CMPST	-	-
0xA048	BZCFG	NTPOW	NTTU	-	PWM8CF	PWM8CS	PWM8INT	PWM8TRG
0xA058	-	-	-	-	-	-	-	-
0xA068	T5CON	TL5	TH5	TT5	-	-	-	-
0xA078	CCCFG	-	-	-	CCDATA0	CCDATA1	CCDATA2	CCDATA3

	0	1	2	3	4	5	6	7
0xA080	PWMCFG1	PWMCFG2	PWMCFG3	-	PWM0DTYL	PWM0DTYH	PWM1DTYL	PWM1DTYH
0xA090	LINCTRL	LINCNTRH	LINCNTRL	LINSBRH	LINSBRL	LININT	LININTEN	-
0xA0A0	PWMDTY0	PWMDTY1	PWMDTY2	PWMDTY3	PWMDTY4	PWMDTY5	PWMDTY6	PWMDTY7
0xA0B0	LINTCON	TXDTOL	TXDTOH	RXDTOL	RXDTOH	BSDCLRL	BSDCLRH	BSDWKC
0xA0C0	FLSHPPT0	FLSHPPT1	FLSHPPT2	FLSHPPT3	FLSHPPT4	FLSHPPT5	FLSHPPT6	FLSHPPT7
0xA0D0	-	-	-	-	-	-	-	-
0xA0E0	BPINTF	BPINTE	BPINTC	BPCTRL	-	-	-	-
0xA0F0	PC1AL	PC1AH	PC1AT	-	PC2AL	PC2AH	PC2AT	-
	8	**9**	**A**	**B**	**C**	**D**	**E**	**F**
0xA088	PWM2DTYL	PWM2DTYH	PWM3DTYL	PWM3DTYH	PWM4DTYL	PWM4DTYH	PWM5DTYL	PWM5DTYH
0xA098	DBPCIDL	DBPCIDH	DBPCIDT	DBPCNXL	DBPCNXH	DBPCNXT	STEPCTRL	SI2CDBGID
0xA0A8	PWMDTY8	PWMDTY9	PWMDTY10	PWMDTY11	PWMDTY12	PWMDTY13	PWMDTY14	PWMDTY15
0xA0B8	BSDACT	-	-	-	-	-	-	-
0xA0C8	FLSHPTI	-	-	-	-	-	-	-
0xA0D8	WDT2CF	WDT2L	WDT2H	WDT3CF	WDT3L	WDT3H	-	-
0xA0E8	-	-	-	-	-	-	-	-
0xA0F8	-	-	-	-	-	-	-	-

	0	1	2	3	4	5	6	7
0xA100	IOCFGO00	IOCFGO01	IOCFGO02	IOCFGO03	IOCFGO04	IOCFGO05	IOCFGO06	IOCFGO07

	0	1	2	3	4	5	6	7
0xA110	IOCFGI00	IOCFGI01	IOCFGI02	IOCFGI03	IOCFGI04	IOCFGI05	IOCFGI06	IOCFGI07
0xA120	MFCFG00	MFCFG01	MFCFG02	MFCFG03	MFCFG04	MFCFG05	MFCFG06	MFCFG07
0xA130	IOCFGO20	IOCFGO21	IOCFGO22	IOCFGO23	IOCFGO24	IOCFGO25	IOCFGO26	IOCFGO27
0xA140	IOCFGI20	IOCFGI21	IOCFGI22	IOCFGI23	IOCFGI24	IOCFGI25	IOCFGI26	IOCFGI27
0xA150	MFCFG20	MFCFG21	MFCFG22	MFCFG23	MFCFG24	MFCFG25	MFCFG26	MFCFG27
0xA160	-	-	-	-	-	-	-	-
0xA170	-	-	-	-	-	-	-	-
	8	**9**	**A**	**B**	**C**	**D**	**E**	**F**
0xA108	IOCFGO10	IOCFGO11	IOCFGO12	IOCFGO13	IOCFGO14	IOCFGO15	IOCFGO16	IOCFGO17
0xA118	IOCFGI10	IOCFGI11	IOCFGI12	IOCFGI13	IOCFGI14	IOCFGI15	IOCFGI16	IOCFGI17
0xA128	MFCFG10	MFCFG11	MFCFG12	MFCFG13	MFCFG14	MFCFG15	MFCFG16	MFCFG17
0xA138	IOCFGO30	IOCFGO31	IOCFGO32	IOCFGO33	-	-	-	-
0xA148	IOCFGI30	IOCFGI31	IOCFGI32	IOCFGI33	-	-	-	-
0xA158	MFCFG30	MFCFG31	MFCFG32	MFCFG33	-	-	-	-
0xA168	-	-	-	-	-	-	-	-
0xA178	-	-	-	-	-	-	-	-

Table 8-1 REGISTER MAP XFR (0xA000 – 0xAFFF)

9. 8051 CPU

9.1 CPU Register

ACC (0xE0) Accumulator R/W (0x00)

	7	6	5	4	3	2	1	0
RD	ACC[7-0]							
WR	ACC[7-0]							

ACC is the CPU accumulator register and is involved in the direct operations of many instructions. ACC is bit-addressable.

B (0xF0) B Register R/W (0x00)

	7	6	5	4	3	2	1	0
RD	B[7-0]							
WR	B[7-0]							

B register is used in standard 8051 multiplication and division instructions and is also used as an auxiliary register for temporary storage. B is also bit-addressable.

PSW (0xD0) Program Status Word R/W (0x00)

	7	6	5	4	3	2	1	0
RD	CY	AC	F0	RS1	RS0	OV	UD	P
WR	CY	AC	F0	RS1	RS0	OV	UD	P

CY	Carry Flag
AC	Auxiliary Carry Flag (BCD Operations)
F0	General Purpose
RS1, RS0	Register Bank Select
OV	Overflow Flag
UD	User Defined (reserved)
P	Parity Flag

SP (0x81) Stack Pointer R/W (0x00)

	7	6	5	4	3	2	1	0
RD	SP[7-0]							
WR	SP[7-0]							

PUSH will result in ACC being written to SP+1 address. POP will load ACC from IRAM with the address of SP.

ESP (0x9B) Extended Stack Pointer R/W (0x00)

	7	6	5	4	3	2	1	0
RD	ESP[7-0]							
WR	ESP[7-0]							

In FLAT address mode, ESP and SP together form a 16-bit address for the stack pointer. ESP holds the higher byte of the 16-bit address.

STATUS (0xC5) Program Status Word RO(0x00)

	7	6	5	4	3	2	1	0
RD	-	HIP	LIP	-	-	-	-	-
WR	-	-	-	-	-	-	-	-

HIP	High Priority (HP) Interrupt Status HIP=0 indicates no HP interrupt. HIP=1 indicates HP interrupt progressing.
LIP	Low Priority (LP) Interrupt Status LIP=0 indicates no LP interrupt. LIP=1 indicates LP interrupt progressing.

SPTA1	UART1 Transmit Activity Status SPTA1=0 indicates no UART1 transmit activity. SPTA1=1 indicates UART1 transmit active.
SPRA1	UART1 Receive Activity Status SPRA1=0 indicates no UART1 receive activity. SPRA1=1 indicates UART1 receive active.
SPTA0	UART0 Transmit Activity Status SPTA0=0 indicates no UART0 transmit activity. SPTA0=1 indicates UART0 transmit active.
SPRA0	UART0 Receive Activity Status SPRA0=0 indicates no UART0 receive activity. SPRA0=1 indicates UART0 receive active.

The program should check status conditions before entering SLEEP, STOP, IDLE, or PMM modes to prevent the loss of intended functions from delayed entry until these events are finished.

In IS31CS8979, the UART0 and UART1 are not implemented, so the SPTA1, SPRA1, SPTA0, and SPRA0 are reserved.

9.2 Addressing Timing and Memory Modes

The clock speed of an MCU with embedded flash memory is usually limited by the access time of on-chip flash memory. While in modern process technology, the CPU can operate much faster and the access time of flash memory is usually around 40 nanoseconds, which becomes a bottleneck for CPU performance. To mitigate this problem, a programmable wait state function is incorporated to allow a faster CPU clock rate to access slower embedded flash memory. The wait state is controlled by WTST register as shown in the following tables.

WTST (0x92) R/W (0x07)

	7	6	5	4	3	2	1	0
RD	-	-	-	-	WTST3	WTST2	WTST1	WTST0
WR	-	-	-	-	WTST3	WTST2	WTST1	WTST0

WTST[3-0] Wait State Control register. WTST holds the information about Program Memory access time.

WTST3	WTST2	WTST1	WTST0	Access Time(SYSCLK)
0	0	0	0	1
0	0	0	1	2
0	0	1	0	3
0	0	1	1	4
0	1	0	0	5
0	1	0	1	6
0	1	1	0	7
0	1	1	1	8
1	0	0	0	9
1	0	0	1	10
1	0	1	0	11
1	0	1	1	12
1	1	0	0	13
1	1	0	1	14
1	1	1	0	15
1	1	1	1	16

The default setting of the wait state control register after reset is 0x07 and the software must initialize the setting to change the wait state setting. Using an SYSCLK of 4MHz, the WTST can be set to a minimum because one clock period is 250ns, which is longer than the typical embedded flash access time. If SYSCLK is above 16MHz, then WTST should be set higher than value 1 to allow enough read access time.

MCON (0xC6) XRAM Relocation Register R/W (0x00) TA Protected

	7	6	5	4	3	2	1	0
RD	MCON[7-0]							
WR	MCON[7-0]							

MCON holds the starting address of XRAM in 2KB steps. For example, if MCON[7-0] = 0x01, the starting address is 0x001000. MCON is not meaningful in this chip because it only contains on-chip XRAM and MCON should not be modified from 0x00.

In LARGE mode, addressing is compatible with standard 8051 in 16-bit address. FLAT mode extends the program address to 20-bit and expands the stack space to 16-bit data space. The data space is always 16-bit in either LARGE or FLAT mode.

ACON (0x9D) R/W (0x00) TA Protected

	7	6	5	4	3	2	1	0
RD	-	-	IVECSEL	-	DPXREN	SA	AM1	AM0
WR	-	-	IVECSEL	-	DPXREN	SA	AM1	AM0

ACON is addressing mode control register.

IVECSEL	Interrupt Vector Selection INTVSEC=1 maps the interrupt vector to B000 space. INTVSEC=0 maps to normal 0x0000 space.
DPXREN	DPXR Register Control Bit. If DPXREN is 0, “MOVX, @Ri” instruction uses P2 (0xA0) register and XRAM Address [15-8]. If DPXREN is 1, DPXR (0xDA) register and XRAM Address [15-8] is used.
SA	Extended Stack Address Mode Indicator. This bit is read-only. 0 – 8051 standard stack mode where stack resides in internal 256-byte memory 1 – Extended stack mode. The stack pointer is ESP: SP in 16-bit addressing to data space.
AM1, AM0	AM1 and AM0 Address Mode Control Bits 00 – LARGE address mode in 16-bit 1x – FLAT address mode with 20-bit program address

9.3 MOVX A, @Ri Instructions

DPXR (0xDA) R/W (0x00)

	7	6	5	4	3	2	1	0
RD	DPXR[7-0]							
WR	DPXR[7-0]							

DPXR is used to replace P2[7-0] for high byte of XRAM address bit[15-7] for “MOVX, @Ri” instructions only if DPXREN=1.

MXAX (0xEA) MOVX Extended Address Register R/W (0x00)

	7	6	5	4	3	2	1	0
RD	MXAX[7-0]							
WR	MXAX[7-0]							

MXAX is used to provide the top 8-bit address for “MOVX @Ri” instructions only. MXAX does not affect other MOVX instructions.

When accessing XRAM using “MOVX, @DPTR” instruction, the address of XRAM access is formed by DPHi: DPLi depending on which data pointer is selected. Another form of MOVX instruction is “MOVX, @Ri”. This instruction provides an efficient programming method to move content within a 256-byte data block. In “@Ri” instruction, the XRAM address [15-7] can be derived from two sources. If ACON.DPXREN = 0, the high order address [15-8] is from P2 (0xA0), if ACON.DPXREN = 1, the high order address is from DPXR (0xDA) register.

The maximum addressing space of XRAM is up to 16MB, and thus it requires a 24-bit address. For “MOVX, @DPTR”, the XRAMADDR [23-16] is from either DPX (0x93) or DPX1 (0x95) depending on which data pointer is

selected. For “MOVX, @Ri”, the XRAMUADDR [23-16] is from MXAX (0xEA) register.

9.4 Dual Data Pointers and MOVX operations

In standard 8051, there is only one data pointer DPH: DPL to perform MOVX. The enhanced CPU provides 2nd data pointer DPH1:DPL1 to speed up the move, or to copy data block. The active DPTR is selected by setting DPS (Data Pointer Select) register. Through the control of DPS, efficient programming can be achieved.

DPS (0x86) Data Pointer Select R/W (0x00)

	7	6	5	4	3	2	1	0
RD	ID1	ID0	TSL	-	-	-	-	SEL
WR	ID1	ID0	TSL	-	-	-	-	SEL

ID[1:0] Define the operation of Increment Instruction of DPTR, “INC DPTR”. Standard 8051 only has increment DPTR instruction. ID[1-0] changes the definitions of “INC DPTR” instruction and allows flexible modifications of DPTR when “INC DPTR” instructions is executed.

ID1	ID0	SEL=0	SEL=1
0	0	INC DPTR	INC DPTR1
0	1	DEC DPTR	INC DPTR1
1	0	INC DPTR	DEC DPTR1
1	1	DEC DPTR	DEC DPTR1

TSL Enable toggling selection of DPTR selection. When this bit is set, the selection of DPTR is toggled when DPTR is used in an instruction and executed.

SEL DPTR selection bit. Set to select DPTR1, and clear to select DPTR. SEL is also affected by the state of ID[1:0] and TSL after DPTR is used in an instruction. When read, SEL reflects the current selection of command.

DPL (0x82) Data Pointer Low R/W (0x00)

	7	6	5	4	3	2	1	0
RD	DPL[7-0]							
WR	DPL[7-0]							

DPL register holds the low byte of data pointer, DPTR.

DPH (0x83) Data Pointer High R/W (0x00)

	7	6	5	4	3	2	1	0
RD	DPH[7-0]							
WR	DPH[7-0]							

DPH register holds the high byte of data pointer, DPTR.

DPL1 (0x84) Extended Data Pointer Low R/W (0x00)

	7	6	5	4	3	2	1	0
RD	DPL1[7-0]							
WR	DPL1[7-0]							

DPL1 register holds the low byte of extended data pointer 1, DPTR1.

DPH1 (0x85) Extended Data Pointer High R/W (0x00)

	7	6	5	4	3	2	1	0
RD	DPH1[7-0]							
WR	DPH1[7-0]							

DPH1 register holds the high byte of extended data pointer 1, DPTR1.

DPX (0x93) Data Pointer Top R/W (0x00)

	7	6	5	4	3	2	1	0
RD	DPX[7-0]							
WR	DPX[7-0]							

DPX is used to provide the top 8-bit address of DPTR for addresses above 64KB. The lower 16-bit address is formed by DPH and DPL. DPX is not affected in LARGE mode and will form a full 24-bit address in FLAT mode, meaning auto increment and decrement when DPTR is changed. DPX value has no effect if on-chip data memory is less than 64KB.

DPX1 (0x95) Extended Data Pointer Top R/W (0x00)

	7	6	5	4	3	2	1	0
RD	DPX1[7-0]							
WR	DPX1[7-0]							

DPX1 is used to provide the top 8-bit address of DPTR for addresses above 64KB. The lower 16-bit address is formed by DPH1 and DP1L. DPX1 is not affected in LARGE mode and will form a full 24-bit address in Flat mode, meaning auto increment and decrement when DPTR is changed. DPX1 value has no effect if on-chip data memory is less than 64KB.

9.5 Interrupt System

The CPU implements an enhanced Interrupt Control that allows a total of 15 interrupt sources and each with two programmable priority levels. The interrupts are sampled at the rising edge of SYSCLK. If interrupts are present and enabled, the CPU enters the interrupt service routine by vectoring to the highest priority interrupt. Among the 15 interrupt sources, 7 of them are from CPU internal integrated peripherals, 6 of them are from on-chip external peripherals, and 2 of them are used for external pin interrupt expansion. When an interrupt is shared, the interrupt service routine must decide which source is requesting the interrupt by examining the corresponding interrupt flag of the sharing peripherals.

The following table shows the interrupt sources and the corresponding interrupt vectors. The Flag Reset column shows whether the corresponding interrupt flag is cleared by hardware (self-cleared) or software. The software can only clear the interrupt flag but not set the interrupt flag. The Natural Priority column shows the inherent priority if more than one interrupt is assigned to the same priority level. Please note that the interrupts assigned with higher priority levels always get serviced first compared with interrupts assigned with lower priority levels regardless of the natural priority sequence.

Interrupt	Peripheral Source Description	Vectors (*Note) IVECSEL=0/1	Flag Reset	Natural Priority
PINT0	Expanded Pin INT0.x	0x0003/0xX003	Software	1
TF0	Timer 0	0x000B/0xX00B	Hardware	2
PINT1	Expanded Pin INT1.x	0x0013/0xX013	Software	3
TF1	Timer 1	0x001B/0xX01B	Hardware	4
INT_EUART1	EUART1	0x0023/0xX023	Software	5
TF2	Timer 2	0x002B/0xX02B	Software	6
INT_EUART2	EUART2/LIN/LIN_FAULT	0x0033/0xX033	Software	7
I2CM	I^2C Master	0x003B/0xX03B	Software	8
INT2	LVT	0x0043/0xX043	Software	9
INT3	Touch Key/ACMP	0x004B/0xX04B	Software	10
INT4	ADC	0x0053/0xX053	Software	11
WDIF	Watchdog WDT1	0x005B/0xX05B	Software	12
INT6	PWM/TCC/QE/PWM8	0x0063/0xX063	Software	13
INT7	SPI/ I^2C Slave	0x006B/0xX06B	Software	14
INT8	T3/T4/T5/BZ	0x0073/0xX073	Software	15

Interrupt	Peripheral Source Description	Vectors (*Note) IVECSEL=0/1	Flag Reset	Natural Priority
ECC	PECC/DECC/WDT2	0x007B/0xX07B	Software	0
BKP	Break Point	0xX080	Software	0
DBG	I2CS Debug	0xX0C0	Software	0

Table 9-1 Interrupt sources and the corresponding interrupt vectors

* Note: When IVECSEL=1, the interrupt vector is relocated to the top available 4KB memory space for boot code usage. Therefore, X=F, for 64K, X=B for 48K, X=7 for 32K, and X=3 for 16K program memory size.

In addition to the 15 peripheral interrupts, there are two highest priority interrupts associated with debugging and breakpoint. DBG interrupt is generated when I²C slave is configured as a debug port and a debug request from the host matches the debug ID. BKP interrupt is generated when a breakpoint match condition occurs. DBG has a higher priority than BKP. The BKP and DBG interrupts are not affected by the global interrupt enable EA bit of IE register (0xA8).

The interrupt-related registers are listed in the following. Each interrupt can be individually enabled or disabled by setting or clearing the corresponding bit in IE, EXIE, and integrated peripherals' control registers.

IE (0xA8) Interrupt Enable Register R/W (0x00)

	7	6	5	4	3	2	1	0
RD	EA	ES2	ET2	ES0	ET1	PINT1EN	ET0	PINT0EN
WR	EA	ES2	ET2	ES0	ET1	PINT1EN	ET0	PINT0EN

EA	Global Interrupt Enable bit.
ES2	LIN-capable16550-like EUART2 Interrupt Enable bit.
ET2	Timer 2 Interrupt Enable bit.
ES0	EUART 1 Interrupt Enable bit.
ET1	Timer 1 Interrupt Enable bit.
PINT1EN	Pin PINT1.x Interrupt Enable bit.
ET0	Timer 0 Interrupt Enable bit.
PINT0EN	Pin PINT0.x Interrupt Enable bit.

EXIE (0xE8) Extended Interrupt Enable Register R/W (0x00)

	7	6	5	4	3	2	1	0
RD	EINT8	EINT7	EINT6	EWDI	EINT4	EINT3	EINT2	EI2CM
WR	EINT8	EINT7	EINT6	EWDI	EINT4	EINT3	EINT2	EI2CM

EINT8	INT8 Interrupt Enable bit.
EINT7	INT7 Interrupt Enable bit.
EINT6	INT6 Enable bit.
EWD1	Watchdog Timer Interrupt Enable bit.
EINT4	INT4 Interrupt Enable bit.
EINT3	INT3 Interrupt Enable bit.
EINT2	INT2 Interrupt Enable bit.
EI2CM	I²C Master Interrupt Enable bit.

Each interrupt can be individually assigned to either high or low. When the corresponding bit is set to 1, it indicates it is of high priority.

IP (0xB8) Interrupt Priority Register R/W (0x00)

	7	6	5	4	3	2	1	0
RD	-	PS2	PT2	PS0	PT1	PX1	PT0	PX0
WR	-	PS2	PT2	PS0	PT1	PX1	PT0	PX0

PS2	LIN-capable 16550-like EUART2 Priority bit.
PT2	Timer 2 Priority bit.
PS0	EUART 1 Priority bit.
PT1	Timer 1 Priority bit.
PX1	Pin Interrupt INT1 Priority bit.

PT0 Timer 0 Priority bit.
PX0 Pin Interrupt INT0 Priority bit.

EXIP (0xF8) Extended Interrupt Priority Register R/W (0x00)

	7	6	5	4	3	2	1	0
RD	PINT8	PINT7	PINT6	PWDI	PINT4	PINT3	PINT2	PI2CM
WR	PINT8	PINT7	PINT6	PWDI	PINT4	PINT3	PINT2	PI2CM

PINT8 INT8 Priority bit.
PINT7 INT7 Priority bit.
PINT6 INT6 Priority bit.
PWDI Watchdog Priority bit.
PINT4 INT4 Priority bit.
PINT3 INT3 Priority bit.
PINT2 INT2 Priority bit.
PI2CM I^2C Master Priority bit.

EXIF (0x91) Extended Interrupt Flag R/W (0x00)

	7	6	5	4	3	2	1	0
RD	INT8F	INT7F	INT6F	-	INT4F	INT3F	INT2F	I2CMIF
WR	-	-	-	-	-	-	-	I2CMIF

INT8F INT8 Flag bit
INT7F INT7 Flag bit
INT6F INT6 Flag bit
INT4F INT4 Interrupt Flag bit
INT3F INT3 Flag bit
INT2F INT2 Flag bit
I2CMIF I^2C Master Interrupt Flag bit. This bit must be cleared by software.

Note: Writing to INT2F to INT8F has no effect.

The interrupt flags of internal peripherals are stored in the corresponding flag registers in the peripheral and EXIF registers. These peripherals include T0, T1, T2, and WDT. Software needs to clear the corresponding flags located in the peripherals (for T0, T1, T2, and WDT). For I2CM, the interrupt flag is located in the EXIF register bit I2CMIF. This needs to be cleared by software.

INT2 to INT8 is used to connect to the external peripherals. INT2F to INT8F is the direct equivalent of the interrupt flag from the corresponding peripherals. These peripherals include Timer 3, Timer 4, Timer 5, Buzzer, SPI, I2CS, PWMx, TCC, QE, ADC, TKC3, etc.

WKMASK (0x9F) R/W (0xFF) Wake Up Mask Register TB Protected

	7	6	5	4	3	2	1	0
RD	WEINT8	WEINT7	WEINT6	WEINT4	WEINT3	WEINT2	WEPINT1	WEPINT0
WR	WEINT8	WEINT7	WEINT6	WEINT4	WEINT3	WEINT2	WEPINT1	WEPINT0

WEINT8 Set this bit to allow INT8 to trigger the wake-up of CPU from STOP modes.
WEINT7 Set this bit to allow INT7 to trigger the wake-up of CPU from STOP modes.
WEINT6 Set this bit to allow INT6 to trigger the wake-up of CPU from STOP modes.
WEINT4 Set this bit to allow INT4 to trigger the wake-up of CPU from STOP modes.
WEINT3 Set this bit to allow INT3 to trigger the wake-up of CPU from STOP modes.
WEINT2 Set this bit to allow INT2 to trigger the wake-up of CPU from STOP modes.
WEPINT1 Set this bit to allow INT1 to trigger the wake-up of CPU from STOP modes.
WEPINT0 Set this bit to allow INT0 to trigger the wake-up of CPU from STOP modes.

WKMASK register defines the wakeup control of the interrupt signals from the STOP mode. The wake-up is performed by these interrupts and the internal oscillator is turned on and SYSCLK resumes if enabled. The interrupt can be set as a level trigger or an edge trigger and the wake-up always runs in accordance with the edge. The wake-up control is wired separately from the interrupt logic, and therefore, after waking up, the CPU does not necessarily enter the interrupt service routine if the corresponding interrupt is not enabled. In this case, the CPU continues onto the next instruction, which initiates the STOP mode. Extra attention should be exerted on the modes of exit and re-entry to ensure proper operation.

All clocks are stopped in STOP/SLEEP mode. Hence, the peripherals that require a clock such as Timer 3, Timer 4, Buzzer, SPI, PWMx, EUART1, ADC, and LVD cannot perform a wake-up function. Only external pins and peripherals that do not require a clock or use SOSC32KHz clock, can be used for wakeup purposes. Such peripherals are like I2CS2, LIN, WDT2, Timer 5, and TKC3

PINT0 and PINT1 are used for external GPIO pin Interrupts. All GPIO pins can be enabled to generate the PINT0 or PINT1 depending on its MFCFG register setting. Each GPIO pin also contains the rising/falling edge detections and either one or both edges can be used for interrupt triggering. The same signaling can be used for generating wake-up.

TCON (0x88) R/W (0x00)

	7	6	5	4	3	2	1	0
RD	TF1	TR1	TF0	TR0	PINT1F	-	PINT0F	-
WR	-	TR1	-	TR0	PINT1F	-	PINT0F	-

TF1	Timer 1 Interrupt Flag bit. TF1 is cleared by hardware when entering the interrupt routine.
TR1	Timer 1 Run Control bit. Set to enable Timer 1.
TF0	Timer 0 Interrupt Flag. TF0 is cleared by hardware when entering the interrupt routine.
TR0	Timer 0 Run Control bit. Set to enable Timer 0.
PINT1F	Pin INT1 Interrupt Flag bit. PINT1F is cleared by hardware when entering the interrupt routine.
PINT0F	Pin INT0 Interrupt Flag bit. PINT0F is cleared by hardware when entering the interrupt routine.

9.6 Register Access Control

One important aspect of the embedded MCU is its reliable operations in a harsh environment. Many system failures result from the accidental loss of data or changes of critical registers that may lead to catastrophic effects. The CPU provides several protection mechanisms, which are described in this section.

TA (0xC7) Time Access Control Register A R/W (xxxxxxx0)

	7	6	5	4	3	2	1	0
RD	-	-	-	-	-	-	-	TASTAT
WR	TA Register							

TA access control emulates a ticket that must be purchased before modifying a critical register. To modify or write into a TA protected register, TA must be accessed in a predefined sequence to obtain the ticket. The ticket is used when an intended modification operation is done to the TA protected register. To obtain the next access a new ticket must be obtained again by performing the same predefined sequence on TA. TA does not limit the read access of the TA protect registers. The TA protected register includes RWT bit of WDCON (0xD8), MCON (0xC6), and ACON (0x9D) registers. The following predefined sequence is required to modify the content of MCON.

```
MOV TA, #0xAA;
MOV TA, #0x55;
MOV MCON, #0x01;
```

Once the access is granted, there is no time limitation of the access. The access is voided if any operation is performed in TA address. When read, TASTAT indicates whether TA is locked or not (1 indicates “unlock” and 0 indicates “lock”).

TB (0xC9) Time Access Control Register B R/W (0x00)

	7	6	5	4	3	2	1	0
RD	-	-	-	-	-	-	-	TBSTAT
WR	TB Register							

TB access control functions are like TA control, except the ticket is for multiple uses with a time limit. Once access is granted, the access is open for 256 clock periods and then expires. The software can also read TB address to obtain the current TB status. The TB protected registers are marked on the register names and descriptions. To modify registers with TB protection, the following procedure must be performed.

```
MOV TB, #0xAA
```

MOV TB, #0x55

This action creates a timed window of 256 SYSCLK periods to allow write access to these TB protected registers. If any above-mentioned sequences are repeated before the 128 cycles expire, a new 128-cycle is extended. The current 256 cycles can be terminated immediately by writing #0x00 to TB registers, such as

MOV TB, #0x00

It is recommended to terminate the TB access window once the user program finishes the modifications of TB protected registers.

Because TA and TB are critical reassurance of the reliable operation of the MCU that prevents accidental hazardous uncontrollable modifications of critical registers, the operation of these two registers should bear extreme cautions. It is strongly advised that these two registers should be turned on only when needed. Both registers use a synchronous CPU clock, and therefore it is imperative that any running tasks of TA and TB should be terminated before entering IDLE mode or STOP mode. Both modes turn off the CPU clock and, if TA and TB are enabled, they stay enabled until the CPU clock resumes, and thus may create vulnerabilities for critical registers.

Another reliability concern of embedded Flash MCU is that the important content in the Flash can be accidentally erased. This concern is addressed by the content protection in the Flash controller.

9.7 Clock Control and Power Management Modes

This section describes the clock control and power-saving modes of the CPU and its integrated peripherals. The settings are controlled by PCON (0x87) and PMR (0xC4) registers. The register description is defined as follows.

PCON (0x87) R/W (0x00)

	7	6	5	4	3	2	1	0
RD	SMOD0	-	-	-	-	-	-	-
WR	SMOD0	-	-	-	-	SLEEP	STOP	IDLE

SMOD0 — UART 0 Baud Rate Control. This is used to select double baud rate in mode 1, 2 or 3 for UART 0 using Timer 1 overflow. This definition is the same as standard 8051. SMOD0 is reserved because UART 0 is not supported in this chip.

SLEEP — Sleep Mode Control Bit. When this bit and the Stop bit are set to 1, the clock of the CPU and all peripherals is disabled and enters SLEEP mode. The SLEEP mode exits when non-clocked interrupts or resets occur. Upon exiting SLEEP mode, Sleep bit and Stop bit in PCON is automatically cleared. In terms of power consumption, the following relationship applies: IDLE mode > STOP mode > SLEEP mode. SLEEP mode is the same as STOP mode, except it also turns off the band gap and the regulator. It uses a very low power backup regulator (< 5uA). When waking up from SLEEP mode, it takes a longer time (< 64 IOSC clock cycles, compared with STOP mode) because the regulator requires more time to stabilize.

STOP — Stop Mode Control Bit. The clock of the CPU and all peripherals is disabled and enters STOP mode if the Sleep bit is in the reset state. The STOP mode can only be terminated by non-clocked interrupts or resets. Upon exiting STOP mode, the Stop bit in PCON is automatically cleared.

IDLE — Idle Bit. If the IDLE bit is set, the system goes into IDLE mode. In Idle mode, CPU clock becomes inactive and the CPU's integrated peripherals such as WDT1, and T0/T1/T2 are reset. But the clocks of CPU and external peripherals like T3/T4/T5, PWMx, ADC, EUART1, LIN-capable16550-like EUART2, SPI, I^2C slave, WDT2, WDT3, and the others are still active. This allows the interrupts generated by these peripherals and external interrupts to wake up the CPU. The exit mechanism of IDLE mode is the same as STOP mode. Idle bit is automatically cleared at the exit of the IDLE mode.

PMR (0xC4) R/W (010xxxxx)

	7	6	5	4	3	2	1	0
RD	CD1=0	CD0	SWB	-	-	-	-	-
WR	-	CD0	SWB	-	-	-	-	-

CD1, CD0 — Clock Divider Control. These two bits control the entry of PMM mode. When CD0=1, and CD1=0, full-speed operation is in effect. When CD0=1, and CD1=1, the CPU enters PMM mode where the CPU and its integrated peripherals operate at a clock rate divided by 257. Note that in PMM mode, all integrated peripherals such as

UART0, LIN-capable 16550-like EUART2, WDT, and T0/T1/T2 run at this reduced rate, and thus may not function properly. All external peripherals to the CPU still operate at full speed in PMM mode.

NOTE: CD1 is internally hardwired to 0. This bit is not supported in PMM mode.

SWB — Switch Back Control bit. Setting this bit allows the actions to occur in integrated peripherals to automatically switch back to the normal operation mode.

NOTE: This function is not supported in PMM mode.

CKSEL (0x8F) System Clock Selection Register R/W (0x0C) TB Protected

	7	6	5	4	3	2	1	0
RD	IOSCDIV[3-0]				-	-	CLKSEL[1]	CLKSEL[0]
WR	IOSCDIV[3-0]				REGRDY[1]	REGRDY[0]	CLKSEL[1]	CLKSEL[0]

IOSCDIV[3-0] — IOSC Pre-Divider. Default is IOSC/32.

IOSCDIV[3-0]	SYSCLK
0	IOSC
1	IOSC/2
2	IOSC/4
3	IOSC/6
4	IOSC/8
5	IOSC/10
6	IOSC/12
7	IOSC/14
8	IOSC/16
9	IOSC/32
10	IOSC/64
11	IOSC/128
12	IOSC/256
13	IOSC/256
14	IOSC/256
15	IOSC/256

REGRDY[1-0] — Wake up delay time for main regulator stable time from reset or from sleep mode wakeup. Default is the longest delay at 256 SOSC32KHz.

REGRDY[1]	REGRDY[0]	Delay time
0	0	8 SOSC32KHz cycle
0	1	16 SOSC32KHz cycle
1	0	64 SOSC32KHz cycle
1	1	256 SOSC32KHz cycle

CLKSEL[1-0] — Clock Source Selection

These two bits define the clock source of the system clock SYSCLK. The selections are shown in the following table. The default setting after reset is IOSC.

CLKSEL[1]	CLKSEL[0]	SYSCLK
0	0	IOSC (through divider)
0	1	SOSC32KHz
1	0	IOSC (through divider)
1	1	XCLKIN

WKMASK (0x9F) Wake-Up Mask Register R/W (0xFF) TB Protected

	7	6	5	4	3	2	1	0
RD	WEINT8	WEINT7	WEINT6	WEINT4	WEINT3	WEINT2	WEPINT1	WEPINT0
WR	WEINT8	WEINT7	WEINT6	WEINT4	WEINT3	WEINT2	WEPINT1	WEPINT0

WEINT8	Set this bit to allow INT8 to trigger the wake-up of CPU from STOP modes.
WEINT7	Set this bit to allow INT7 to trigger the wake-up of CPU from STOP modes.
WEINT6	Set this bit to allow INT6 to trigger the wake-up of CPU from STOP modes.
WEINT4	Set this bit to allow INT4 to trigger the wake-up of CPU from STOP modes.
WEINT3	Set this bit to allow INT3 to trigger the wake-up of CPU from STOP modes.
WEINT2	Set this bit to allow INT2 to trigger the wake-up of CPU from STOP modes.
WEPINT1	Set this bit to allow INT1 to trigger the wake-up of CPU from STOP modes.
WEPINT0	Set this bit to allow INT0 to trigger the wake-up of CPU from STOP modes.

WKMASK register defines the wake-up control of the interrupt signals from the STOP/SLEEP mode. The wake-up is performed by these interrupts and the internal oscillator is turned on and SYSCLK resumes if enabled. The interrupt can be set as a level trigger or an edge trigger and the wake-up always runs in accordance with the edge. The wake-up control is wired separately from the interrupt logic, and therefore after waking up, the CPU does not necessarily enter the interrupt service routine if the corresponding interrupt is not enabled. In this case, the CPU continues onto the next instruction, which initiates the STOP/SLEEP mode. Extra attention should be taken to designing the exit and re-entry of modes to ensure proper operation.

All clocks are stopped in STOP or SLEEP modes, and therefore peripherals such as I^2C slave, UARTx, ADC, LVD, and T3/T4, require clocks that cannot perform a wake-up function. Only external pins and peripherals that do not require a clock can be used for wake-up purposes. Such peripherals are TKC3, LIN Wakeup and Timer5 with SOSC32KHz.

9.8 IDLE Mode

IDLE mode provides power saving by stopping SYSCLK to CPU and its integrated peripherals while other peripherals are still in operation with SYSCLK. Hence other peripherals still function normally and can generate interrupts that wake up the CPU from IDLE mode. The IDLE mode is enabled by setting IDLE bit to 1.

When the CPU is in idle mode, there is no processing. All integrated internal peripherals such as T0/T1/T2, and I^2C Master are inaccessible during idle mode. The IDLE mode can be closed by hardware reset or by external interrupts as well as the interrupts from external peripherals that are OR-ed with the external interrupts. The triggering external interrupts need to be enabled properly. Upon exiting from IDLE mode, the CPU resumes operation as the clock is being turned on. CPU immediately vectors to the interrupt service routine of the corresponding interrupt sources that wake up the CPU. When the interrupt service routine completes, RETI returns to the program and immediately follows the one that invokes the IDLE mode. Upon returning from IDLE mode to normal mode, idle bit in PCON is automatically cleared.

9.9 STOP Mode

STOP mode provides further power reduction by stopping SYSCLK to all circuits. In STOP mode, IOSC oscillator is disabled. STOP mode is entered by setting STOP = 1. To achieve minimum power consumption, it is essential to turn off all peripherals with DC current consumption. It is also important that the software switches to the IOSC clock and disables all other clock generators before entering STOP mode. It is critical to ensure a smooth transition when resuming back to its normal operations. Upon entering STOP mode, the system uses the last edge of IOSC clock to shut down the IOSC clock generator.

Valid interrupt/wakeup event or reset will result in the exit of STOP mode. Upon exit, STOP bit is cleared by hardware and IOSC is resumed. The triggering interrupt source must be enabled and its Wake-up bit is set in the WKMASK register. As CPU resumes, the normal operation applies the previous clock settings. When an interrupt occurs, the CPU vectors to the interrupting service routine of the corresponding interrupt source. When the interrupt service routine completes, RETI returns to the program to execute the instruction that invokes the STOP mode.

The on-chip 1.5V regulator for core circuits is still enabled along with its reference voltage. As the result, the power consumption due to the regulator and its reference circuit is still around 500uA. The advantage of STOP mode is its immediate resumption of the CPU.

9.10 SLEEP Mode

SLEEP mode achieves very low standby consumption by putting the on-chip 1.5V regulator in the disabled state. An ultra-low-power backup regulator (typical 1.42V) supplies the internal core circuit and maintains the logic state and SRAM data. The total current drain in SLEEP mode is less than 1.5uA. Only the backup regulator and the SOSC32KHz circuit are still in operation in SLEEP mode.

The exit of SLEEP mode is the same interrupt/wakeup event as in STOP mode, and, in addition, the on-chip regulator is enabled. SYSCLK is resumed after a delay set by REGRDY (clocked by SOSC32KHz). REGRDY delay is necessary to ensure the stable operation of the regulator. The larger the decoupling capacitance, the longer delay should be set.

9.11 Clock Control

The clock selection is defined by CKSEL register (0x8F). There are three selections from divided IOSC, SOSC32KHz, and XCLKIN. The default selection is divided IOSC. The typical power consumption of CPU is 0.3mA/MHZ.

9.12 Watchdog Timer

The Watchdog Timer is a 30-bit timer that can be used by a system supervisor or as an event timer. The Watchdog timer can be used to generate an interrupt or to issue a system reset depending on the control settings. This section describes the register related to the operation of Watchdog Timer and its functions. The following diagram shows the structure of the Watchdog Timer. WDT shares the same clock with the CPU, and thus WDT is disabled in IDLE mode or STOP mode. However, it runs at a reduced rate in PMM mode.

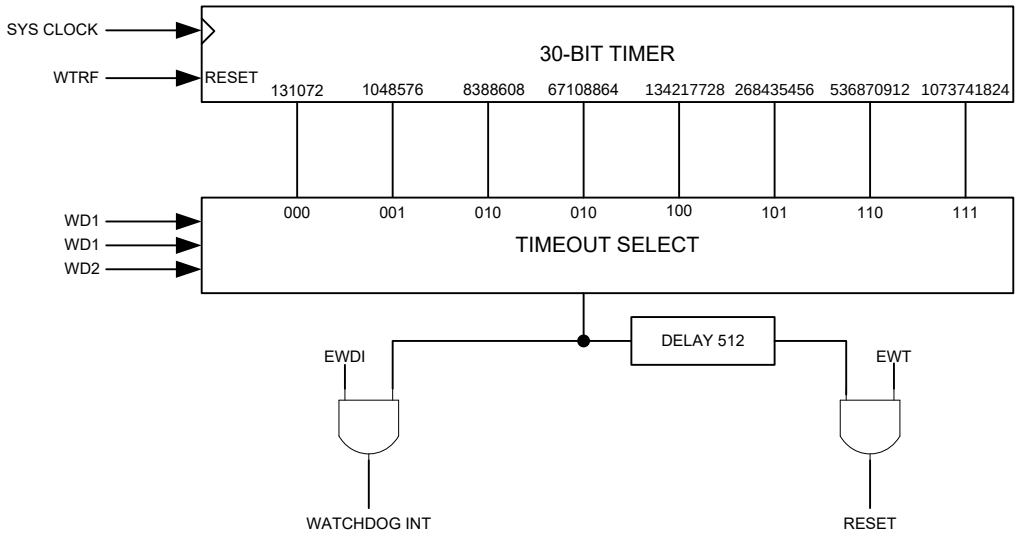

Figure 9-1 Watchdog Timer

WDCON (0xD8) WDT1 Interrupt Flag Register R/W (0x02) TA Protected only for bit 0 RWT

	7	6	5	4	3	2	1	0
RD	-	-	-	-	WDIF	WTRF	EWT	-
WR	-	-	-	-	WDIF	WTRF	EWT	RWT

WDIF	WDT Interrupt Flag bit. This bit is set when the session expires regardless of a WDT1 interrupt is enabled or not. WDT1 interrupt enable control is located in EXIE (0xE8).4 EWDI bit. It must be cleared by software.
WTRF	WDT1 Reset Flag bit. WDRF is cleared by hardware reset including RSTN, POR, etc. WTRF is set to 1 after a WDT1 reset occurs. It can be cleared by software. WTRF can be used by software to determine if a WDT1 reset has occurred.
EWT	Watchdog Timer Reset Enable bit. Set this bit to enable the watchdog reset function. The default WDT1 reset is enabled and the WDT1 timeout is set to maximum.
RWT	Reset the Watchdog timer. Writing 1 to RWT resets the WDT1 timer. RWT bit is not a register and does not hold any value. The clearing action of the Watchdog timer is protected by TA access. In another word, to clear Watchdog timer, TA must be unlocked and then write RWT bit to 1. If TA is still locked, the program can write 1 into RWT bit, but it does not reset the Watchdog timer.

CKCON (0x8E) Clock Control and WDT1 R/W (0xC7)

	7	6	5	4	3	2	1	0
RD	WD1	WD0	T2CKDCTL	T1CKDCTL	T0CKDCTL	WD2	-	-
WR	WD1	WD0	T2CKDCTL	T1CKDCTL	T0CKDCTL	WD2	-	-

T2CKDCTL — Timer 2 Clock Source Division Factor Control Flag. Setting this bit to 1 sets the Timer 2 division factor to 4, and the Timer 2 clock frequency equals CPU clock frequency divided by 4. Setting this bit to 0 (the default power-on value) sets the Timer 2 division factor to 12, the Timer 2 clock frequency equals CPU clock frequency divided by 12.

T1CKDCTL — Timer 1 Clock Source Division Factor Control Flag. Setting this bit 1 sets the Timer 1 division factor to 4, and the Timer 1 clock frequency equals CPU clock frequency divided by 4. Setting this bit to 0 (the default power-on value) sets the Timer 1 division factor to 12, and the Timer 1 clock frequency equals CPU clock frequency divided by 12.

T0CKDCTL — Timer 0 Clock Source Division Factor Control Flag. Setting this bit1 sets the Timer 0 division factor to 4, and the Timer 0 clock frequency equals CPU clock frequency divided by 4. Setting this bit0 (the default power-on value) sets the Timer 0 division factor equals 12, and the Timer 0 clock frequency equals CPU clock frequency divided by 12.

WD[2-0] — This register controls the timeout value of WDT1 as the following table. The timeout value is shown as following table and the default is set to maximum:

WD2	WD1	WD0	Timeout Value
0	0	0	131072
0	0	1	1048576
0	1	0	8388608
0	1	1	67108864
1	0	0	134217728
1	0	1	268435456
1	1	0	536870912
1	1	1	1073741824

A second 16-bit Watchdog Timer (WDT2) clocked by the independent nonstop SOSC32KHz is included. WDT2 can be used to generate interrupt/wakeup timing from STOP/SLEEP mode, or generate software reset.

WDT2CF (0xA0D8) Watchdog Timer 2 Configure Registers R/W (0x00) TB Protected

	7	6	5	4	3	2	1	0
RD	-	WDT2REN	WDT2RF	WDT2IEN	WDT2CS[2-0]			WDT2IF
WR	WDT2CLR	WDT2REN	WDT2RF	WDT2IEN	WDT2CS[2-0]			WDT2IF

WDT2CLR — WDT2 Counter Clear
Writing “1” to WDT2CLR clears the WDT2 count to 0. It is self-cleared by hardware.

WDT2REN — WDT2 Reset Enable
WDT2REN=1 configures WDT2 to perform a software reset.

WDT2RF — WDT2 Reset Flag
WDT2RF is set to “1” after a WDT2 reset occurs. This must be cleared by writing “0”.

WDT2IEN — WDT2 Interrupt Enable
WDT2IEN=1 enables WDT2 interrupt.

WDT2CS[2-0] — WDT2 Clock Scaling

WDT2CS[2-0]	Clock SOSC32KHz Divider	WDT2Period
000	2^8	8 msec
001	2^9	16 msec
010	2^10	32 msec
011	2^11	64 msec
100	2^12	128 msec
101	2^13	256 msec
110	2^14	512 msec
111	2^15	1024 msec

WDT2IF WDT2 Interrupt Flag
WDT2IF is set to “1” after a WDT2 interrupt. This must be cleared by writing “0”.

Please note that the longest effective time WDT2 can be set is approximately 18 hours.

WDT2L (0xA0D9) Watchdog Timer 2 Time Out Value Low Byte RW (0xFF) TB Protected

	7	6	5	4	3	2	1	0
RD	WDT2CNT[7-0]							
WR	WDT2[7-0]							

WDT2H (0xA0DA) Watchdog Timer 2 Time Out Value High Byte RW (0x0F) TB Protected

	7	6	5	4	3	2	1	0
RD	WDT2CNT[15-8]							
WR	WDT2[15-8]							

WDT2L and WDT2H hold the timeout value for watchdog timer 2. When the counter reaches WDT2 timeout value, an interrupt or reset is generated. Reading this register returns the current count value.

A third Watchdog Timer (WDT3) is also included for further enhancement of fault recovery. WDT3 cannot be disabled in normal mode. It can be disabled only in SLEEP mode if SLEEPDIS[2-0] = 3’b101. WDT3 is clocked 4 times slower than WDT2, and is also set by WDT2CS[2-0].

WDT2CS[2-0]	Clock SOSC32KHz Divider	WDT3 Period
000	2^12	32 msec
001	2^13	64 msec
010	2^14	128 msec
011	2^15	256 msec
100	2^16	512 msec
101	2^17	1024 msec
110	2^18	2048 msec
111	2^19	4096 msec

Therefore, the longest time of WDT3 is about 72 hours (4 seconds times 2^16).

WDT3CF (0xA0DB) Watchdog Timer 3 Configure Registers R/W (0xD1) TB Protected

	7	6	5	4	3	2	1	0
RD	-	SLEEPDIS[2-0]			-			WDT3RF
WR	WDT3CLR	SLEEPDIS[2-0]			-			WDT3RF

WDT3CLR WDT3 Counter Clear
Writing “1” to WDT3CLR clears the WDT3 count to 0. It is self-cleared by hardware.

SLEEPDIS[2-0] Stop WDT3 increment in STOP/SLEEP mode
SLEEPDIS[2-0] = 3b’101 stops WDT3 in STOP/SLEEP mode.

WDT3RF WDT3 Reset Flag
WDT3RF is set to “1” after a WDT3 reset occurs. This must be cleared by writing “0”.

WDT3L (0xA0DC) Watchdog Timer 3 Timeout Value Low Byte R/W (0x3F) TB Protected

	7	6	5	4	3	2	1	0
RD	WDT3CNT[7-0]							
WR	WDT3[7-0]							

WDT3H (0xA0DD) Watchdog Timer 3 Timeout Value High Byte R/W (0x00) TB Protected

	7	6	5	4	3	2	1	0
RD	WDT3CNT[15-8]							
WR	WDT3[15-8]							

WDT3L and WDT3H hold the timeout value for watchdog timer 3. When the counter reaches the WDT3 timeout value, a reset is generated. Reading this register returns the current count value.

9.13 System Timers – T0 and T1

The CPU contains three 16-bit timers/counters, Timer 0, Timer 1, and Timer 2. In timer mode, Timer 0, and Timer 1 registers are incremented every 12 SYSCLK periods when the appropriate timer is enabled. In the timer mode, Timer 2 registers are incremented every 12 or 2 SYSCLK periods (depending on the operating mode). In the counter mode, the timer registers are incremented every falling edge on their corresponding inputs: T0, T1, and T2. These inputs are read every SYSCLK period.

Timer 0 and Timer 1 are fully compatible with the standard 8051. Timer 0 and 1 are controlled by TCON (0x88) and TMOD (0x89) registers while each timer consists of two 8-bit registers TH0 (0x8C), TL0 (0x8A), TH1 (0x8D), TL1 (0x8B).

TCON (0x88) R/W (0x00)

	7	6	5	4	3	2	1	0
RD	TF1	TR1	TF0	TR0	PINT1F	-	PINT0F	-
WR	-	TR1	-	TR0	PINT1F	-	PINT0F	-

TF1 Timer 1 Interrupt Flag bit. TF1 is cleared by hardware when entering the interrupt routine.

TR1 Timer 1 Run Control bit. Set to enable Timer 1.

TF0 Timer 0 Interrupt Flag. TF0 is cleared by hardware when entering the interrupt routine.

TR0 Timer 0 Run Control bit. Set to enable Timer 0.

PINT1F Pin INT1 Interrupt Flag bit. PINT1F is cleared by hardware when entering the interrupt routine.

PINT0F Pin INT0 Interrupt Flag bit. PINT0F is cleared by hardware when entering the interrupt routine.

TMOD (0x89) Timer 0 and 1 Mode Control Register R/W (0x00)

	7	6	5	4	3	2	1	0
RD	GATE1	CT1	T1M1	T1M0	GATE0	CT0	T0M1	T0M0
WR	GATE1	CT1	T1M1	T1M0	GATE0	CT0	T0M1	T0M0

GATE1 Timer 1 Gate Control bit. Set to enable external T1 to function as gating control of the counter.

CT1 Counter or Timer Mode Select bit. Set CT1 to access external T1 as the clock source. Clear CT1 to use internal clock.

T1M1 Timer 1 Mode Select bit

T1M0 Timer 1 Mode Select bit

GATE0 Timer 0 Gate Control bit. Set to enable external T0 to function as gating control of the counter.

CT0 Counter or Timer Mode Select bit. Set CT0 to use external T0 as the clock source. lear CT0 to use internal clock.

T0M1 Timer 0 Mode Select bit

T0M0 Timer 0 Mode Select bit

M1	M0	Mode	Mode Descriptions
0	0	0	TL serves as a 5-bit pre-scaler and TH functions as an 8-bit counter/timer. They form a 13-bit operation.
0	1	1	TH and TL are cascaded to form a 16-bit counter/timer.
1	0	2	TL functions as an 8-bit counter/timer and auto-reloads from TH.
1	1	3	TL functions as an 8-bit counter/timer. TH functions as an 8-bit timer, which is controlled by GATE1. Only Timer 0 can be configured in Mode 3. When this happens, Timer 1 can only be used where its interrupt is not required.

9.13.1Mode 0

In this mode, TL serves as a 5-bit pre-scaler and TH functions as an 8-bit counter/timer, and both work together as a 13-bit counter/timer. The Mode 0 operation is shown in the following diagram.

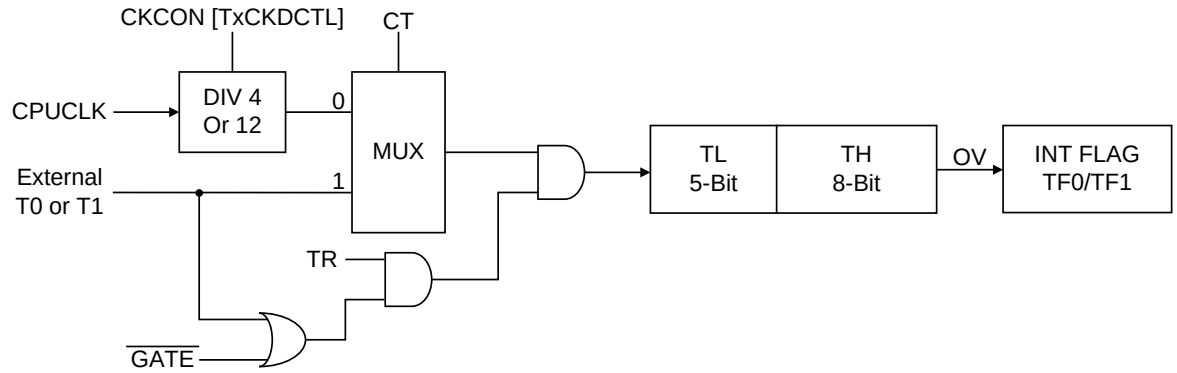

Figure 9-2 Timer/Counter Mode 0: 13-bit counter

9.13.2Mode 1

Mode 1 operates the same way as Mode 0 does, except TL is configured as 8-bit, and thus forms a 16-bit counter/timer. This is shown as the following diagram.

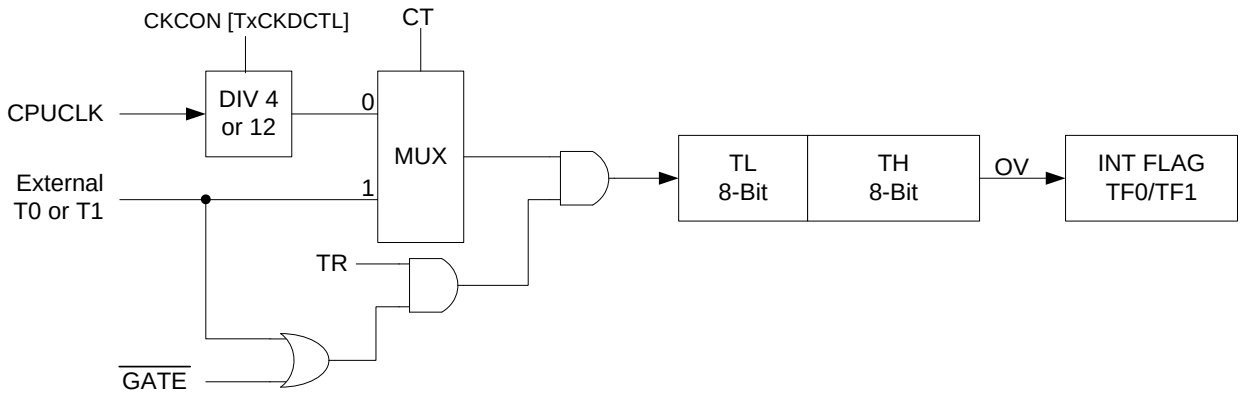

Figure 9-3 Timer/Counter Mode 1: 16-bit counter

9.13.3Mode 2

Mode 2 configures the timer as an 8-bit re-loadable counter. The counter is TL while TH stores the reload data. The reload occurs when TL overflows. The operation is shown in the following diagram.

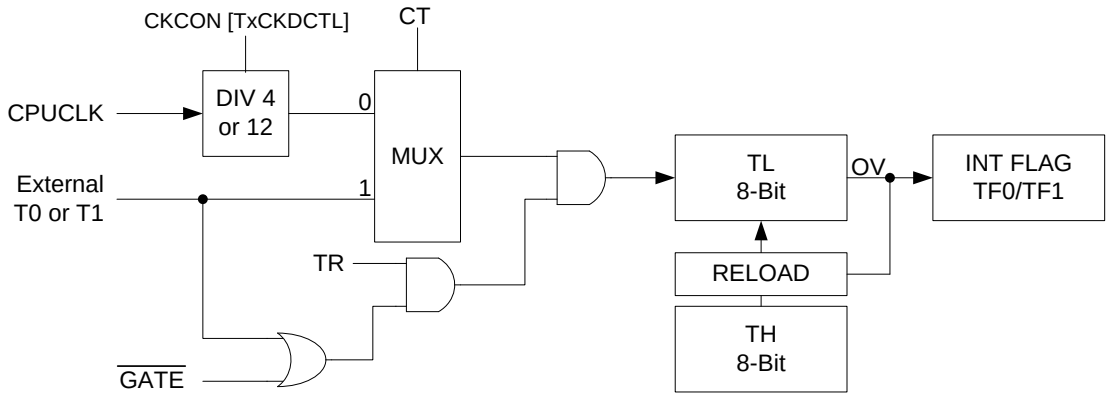

Figure 9-4 Timer/Counter Mode 2: 8-bit re-load

9.13.4Mode 3

Mode 3 is a special mode for Timer 0 only. In this mode, Timer 0 is configured as two separate 8-bit counters. TL0 uses the control and interrupt flags of Timer 0, whereas TH0 uses the control and interrupt flag of

Timer 1. Since Timer 1's control and flag are occupied, Timer 2 can only be used for counting purposes such as Baud rate generation while Timer 0 is in Mode 3. The operation flow of Mode 3 is shown in the following diagram.

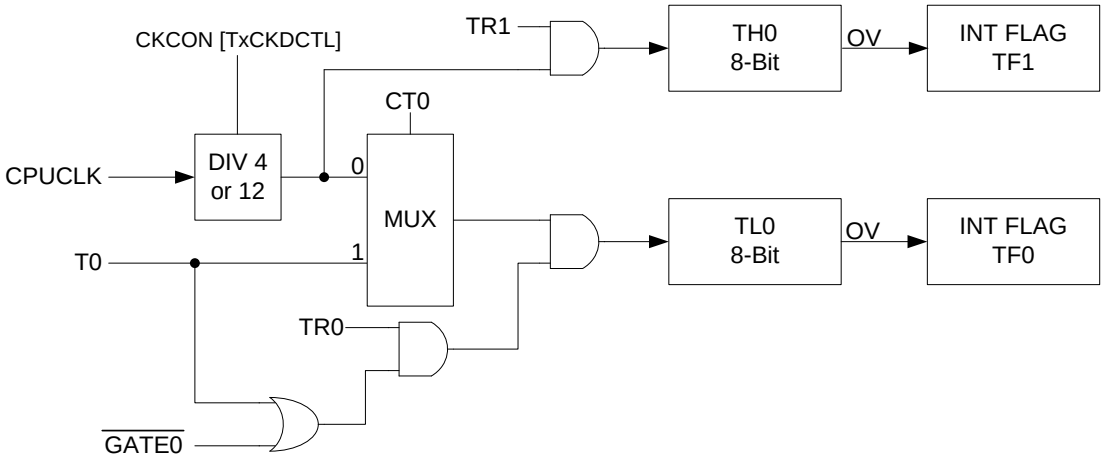

Figure 9-5 Timer/Counter Mode 3: Two 8-bit counters

TL0 (0x8A) Timer 0 Low Byte Register R/W (0x00)

	7	6	5	4	3	2	1	0
RD	TL0[7-0]							
WR	TL0[7-0]							

TH0 (0x8C) Timer 0 High Byte Register R/W (0x00)

	7	6	5	4	3	2	1	0
RD	TH0[7-0]							
WR	TH0[7-0]							

TL1 (0x8B) Timer 1 Low Byte Register R/W (0x00)

	7	6	5	4	3	2	1	0
RD	TL1[7-0]							
WR	TL1[7-0]							

TH1 (0x8D) Timer 1 High Byte Register R/W (0x00)

	7	6	5	4	3	2	1	0
RD	TH1[7-0]							
WR	TH1[7-0]							

9.14 System Timer – T2

Timer 2 is fully compatible with the standard 8052 timer 2. Timer 2 can be used as the re-loadable counter, capture timer, or baud rate generator. Timer 2 uses five SFR as counter registers, capture registers, and a control register.

T2CON (0xC8) Timer 2 Control and Configuration Register R/W (0x00)

	7	6	5	4	3	2	1	0
RD	TF2	EXF2	RCLK	TCLK	EXEN2	TR2	CT2	CPRL2
WR	TF2	EXF2	RCLK	TCLK	EXEN2	TR2	CT2	CPRL2

TF2 Timer 2 Interrupt Flag bit
TF2 must be cleared by software. TF2 is not set when RCLK or TCLK is set (that means Timer 2 is used as a UART0 Baud rate generator).

EXF2 T2EX Falling Edge Flag bit
This bit is set when T2EX has a falling edge when EXEN2=1. EXF2 must be cleared by software.

RCLK Receive Clock Enable bit

	1 – UART0 receiver is clocked by Timer 2 overflow pulses. 0 – UART0 receiver is clocked by Timer 1 overflow pulses.
TCLK	Transmit Clock Enable bit 1 – UART0 transmitter is clocked by Timer 2 overflow pulses. 0 – UART0 transmitter is clocked by Timer 1 overflow pulses.
EXEN2	T2EX Function Enable bit 1 – Allows capture or reload as T2EX falling edge appears. 0 – Ignore T2EX events.
TR2	Start/Stop Timer 2 Control bit 1 – Start 0 – Stop
CT2	Timer 2 Timer/Counter Mode Select bit 1 – External event counter uses T2 pin as the clock source. 0 – Internal clock timer mode
CPRL2	Capture/Reload Select bit 1 – Use T2EX pin falling edge for capture. 0 – Automatic reload on Timer 2 overflow or falling edge of T2EX (when EXEN2=1). If RCLK or TCLK is set (Timer 2 is used as a baud rate generator), this bit is ignored and an automatic reload is forced on Timer 2 overflows.

Note: UART0 is not implemented in IS31CS8979.

Timer 2 can be configured in three modes of operations –Auto-reload Counter, Capture Timer, and Baud Rate Generator. These modes are defined by RCLK, TCLK, CPRL2 and TR2 bits of T2CON registers. The definition is illustrated in the following table:

RCLK or TCLK	CPRL2	TR2	Mode Descriptions
0	0	1	16-bit Auto-reload Counter mode. Timer 2 overflow sets the TF2 interrupt flag and TH2/TL2 is reloaded with RLDH/RLHL register.
0	1	1	16-bit Capture Timer mode. Timer 2's overflow sets TF2 interrupt flag. When EXEN2=1, TH2/TL2 content is captured into RLDH/RLDL when T2EX falling edge occurs.
1	X	1	Baud Rate Generator mode. Timer 2's overflow is used for configuring UART0.
X	X	0	Timer 2 is stopped.

The block diagram of the Timer 2 operating in Auto-reload Counter and Capture Timer modes are shown in the following diagram:

External T2 and External T2EX are tied together in this device.

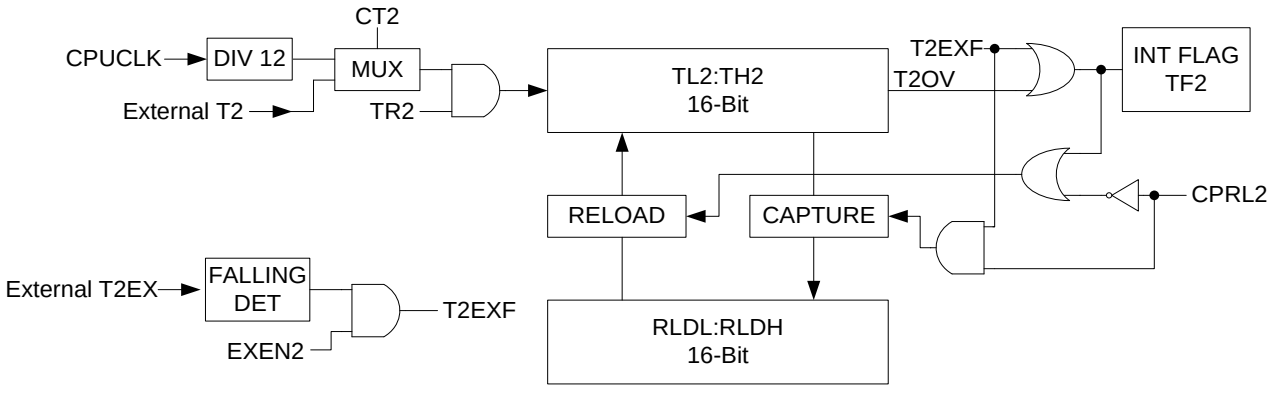

Figure 9-6 Timer 2 block diagram of Auto-reload and Capture

The block diagram of the Timer 2 operating in Baud Rate Generator is shown in the following diagram:

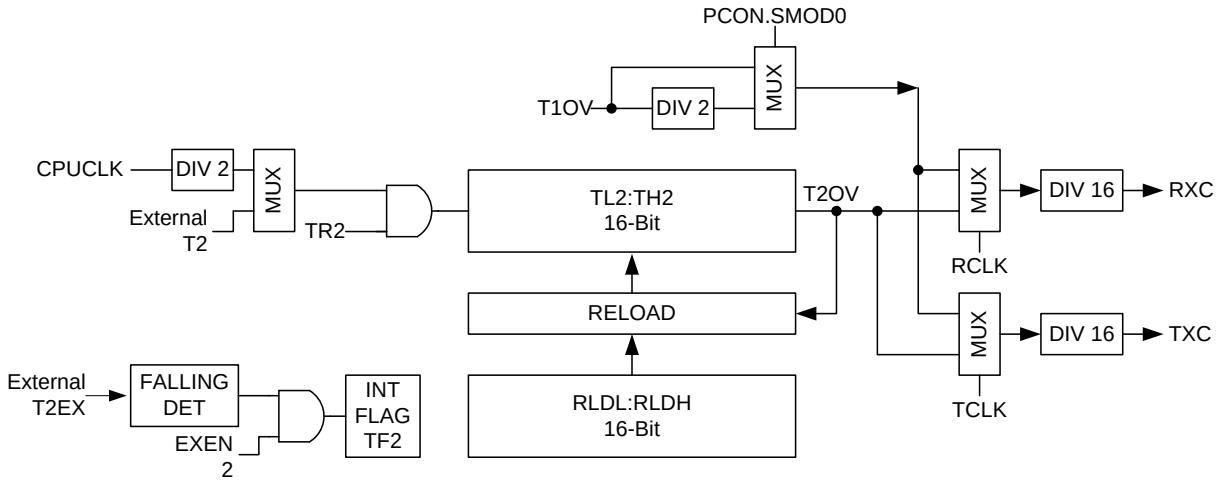

Figure 9-7 Timer 2 block diagram of Baud Rate Generator

TL2 (0xCC) Timer 2 Low Byte Register R/W (0x00)

	7	6	5	4	3	2	1	0
RD	TL2[7-0]							
WR	TL2[7-0]							

TH2 (0xCD) Timer 2 High Byte Register R/W (0x00)

	7	6	5	4	3	2	1	0
RD	TH2[7-0]							
WR	TH2[7-0]							

RLDL (0xCA) Timer 2 reload Low Byte Register R/W (0x00)

	7	6	5	4	3	2	1	0
RD	RLDL[7-0]							
WR	RLDL[7-0]							

RLDH (0xCB) Timer 2 reload High Byte Register R/W (0x00)

	7	6	5	4	3	2	1	0
RD	RLDH[7-0]							
WR	RLDH[7-0]							

9.15 System Timer – T3 and T4

Both Timer 3 and Timer 4 are simple 16-Bit reload timers or free-run counters and are clocked by the system clock. The block diagram is shown below.

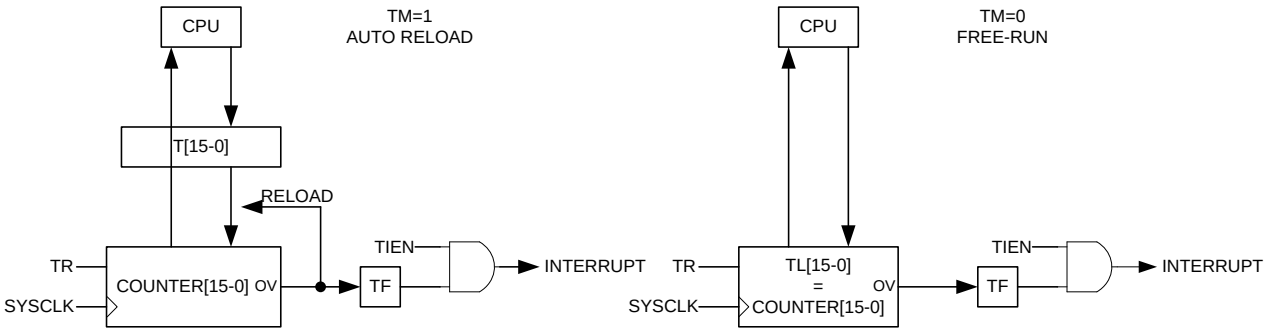

Figure 9-8 Timer 3 and Timer 4 block diagram

T34CON (0xCF) Timer 3 and Timer 4 Control and Status Register R/W (0x00)

	7	6	5	4	3	2	1	0
RD	TF4	TM4	TR4	T4IEN	TF3	TM3	TR3	T3IEN
WR	TF4	TM4	TR4	T4IEN	TF3	TM3	TR3	T3IEN

TF4	Timer 4 Overflow Interrupt Flag bit TF4 is set by hardware when an overflow condition occurs. TF4 must be cleared by software.
TM4	Timer 4 Mode Control bit. TM4=1 sets timer 4 as auto-reload, and TM4=0 sets timer 4 as free-run.
TR4	Timer 4 Run Control bit. Set to enable Timer 4, and clear to stop Timer 4.
T4IEN	Timer 4 Interrupt Enable bit T4IEN=0 disables the Timer 4 overflow interrupt. T4IEN=1 enables the Timer 4 overflow interrupt.
TF3	Timer 3 Overflow Interrupt Flag bit TF3 is set by hardware when an overflow condition occurs. TF3 must be cleared by software.
TM3	Timer 3 Mode Control bit. TM3=1 sets timer 3 as auto-reload, and TM3=0 sets timer 3 as free-run.
TR3	Timer 3 Run Control bit. Set to enable Timer 3, and clear to stop Timer 3.
T3IEN	Timer 3 Interrupt Enable bit. T3IEN=0 disables the Timer 3 overflow interrupt T3IEN=1 enables the Timer 3 overflow interrupt

TL3 (0xAE) Timer 3 Low Byte Register R/W (0x00)

	7	6	5	4	3	2	1	0
RD	T3[7-0]							
WR	T3[7-0]							

TH3 (0xAF) Timer 3 High Byte Register R/W (0x00)

	7	6	5	4	3	2	1	0
RD	T3[15-8]							
WR	T3[15-8]							

TL4 (0xAC) Timer 4 Low Byte Register R/W (0x00)

	7	6	5	4	3	2	1	0
RD	T4[7-0]							
WR	T4[7-0]							

TH4 (0xAD) Timer 4 High Byte Register R/W (0x00)

	7	6	5	4	3	2	1	0
RD	T4[15-8]							
WR	T4[15-8]							

T3[15-0] and T4[15-0] function differently when both are read or written. When written in auto-reload mode, its reload value is written. In free-run mode, the counter value is written immediately. When read, the return value is always the present counter value. There is no snapshot buffer in the read operation, so software should always read the high byte and then the low byte.

9.16 System Timer – T5

T5 is a 24-Bit simple timer. It can select four different clock sources and can be used for extended sleep mode wake-up. The clock sources include IOSC, XOSC, RTC, and SOSC32KHz. T5 can be configured either as a free-run mode or auto-reload mode. Timer 5 does not depend on the SYSCLK, and therefore it continues to count under STOP or SLEEP mode if the clock source is present. The following diagram shows the block diagram of Timer 5.

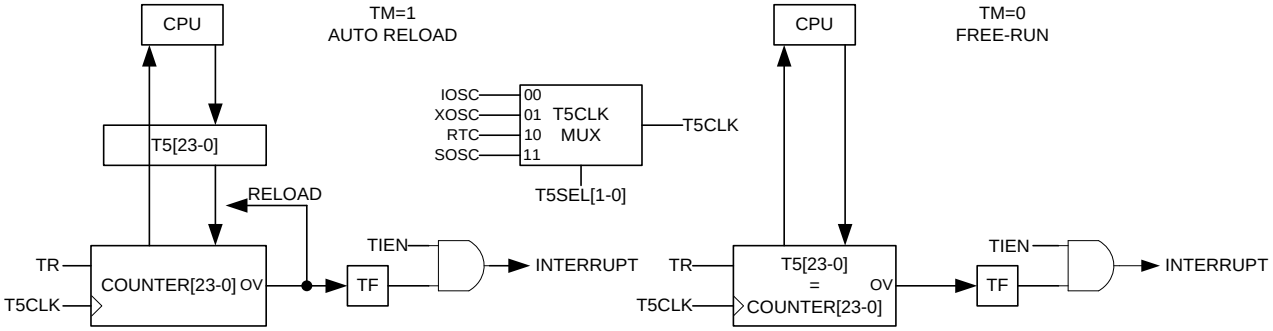

Figure 9-9 Timer 5 block diagram

T5CON (0xA068) Timer 5 Control and Status Register (0x00)

	7	6	5	4	3	2	1	0
RD	TF5	T5SEL[1]	T5SEL[0]	TM5	TR5	-	-	T5IEN
WR	TF5	T5SEL[1]	T5SEL[0]	TM5	TR5	-	-	T5IEN

TF5	Timer 5 Overflow Interrupt Flag bit TF5 is set by hardware when overflow condition occurs. TF5 must be cleared by software.
T5SEL[1-0]	Timer 5 Clock Selection bits T5SEL[1-0] = 00, IOSC T5SEL[1-0] = 01, IOSC T5SEL[1-0] = 10, SOSC32KHz T5SEL[1-0] = 11, SOSC32KHz
TM5	Timer 5 Mode Control bit. TM5=1 sets timer 5 as auto reload, and TM5=0 sets timer 5 as free-run.
TR5	Timer 5 Run Control bit. Set to enable Timer 5, and clear to stop Timer 5.
T5IEN	Timer 5 Interrupt Enable bit T5IEN=0 disables the Timer 5 overflow interrupt. T5IEN=1 enables the Timer 5 overflow interrupt.

TL5 (0xA069) Timer5 Low Byte Register R/W (0x00)

	7	6	5	4	3	2	1	0
RD	T5[7-0]							
WR	T5[7-0]							

TH5 (0xA06A) Timer5 Medium Byte Register R/W (0x00)

	7	6	5	4	3	2	1	0
RD	T5[15-8]							
WR	T5[15-8]]							

TT5 (0xA06B) Timer5 High Byte Register R/W (0x00)

	7	6	5	4	3	2	1	0
RD	T5[23-16]							
WR	T5[23-16]							

T5[23-0] functions differently when being read or written. When written in auto-reload mode, its reload value is written, and in free-run mode, the counter value is written immediately. When read, the return value is always the present counter value. There is no snapshot buffer in the read operation, so software should always read the high byte and then the low byte.

9.17 Multiplication and Division Unit (MDU)

MDU provides acceleration on unsigned integer operations of 16-bit multiplications, 32-bit division, and shifting and normalizing operations. The following table shows the execution characteristics of these operations. The MDU does not contain the operation completion status flag. Therefore, the most efficient utilization of MDU

uses NOP delay for the required clock time of the MDU operation types. The number of the clock cycles required for each operation is shown in the following table and it is counted from the last write of the writing sequence.

Operations	Result	Reminder	# of Clock Cycle
32-bit division by 16-bit	32-bit	16-bit	17
16-bit division by 16-bit	16-bit	16-bit	9
16-bit multiplication by 16-bit	32-bit	-	10
32-bit normalization	-	-	3 – 20
32-bit shift left/right	-	-	3 – 18

The MDU is accessed through MD0 to MD5 which contains the operands and the results, and the operation is controlled by ARCON register.

ARCON (0xFF) MDU Control R/W (0x00)

	7	6	5	4	3	2	1	0
RD	MDEF	MDOV	SLR	SC4	SC3	SC2	SC1	SC0
WR	MDEF	MDOV	SLR	SC4	SC3	SC2	SC1	SC0

MDEF	MDU Error Flag bit. Set by hardware to indicate MDx being written before the previous operation completes. MDEF is automatically cleared after reading ARCON.
MDOV	MDU Overflow Flag bit. MDOV is set by hardware if the dividend is zero or the result of the multiplication is greater than 0x0000FFFF
SLR	Shift Direction Control bit. SLR = 1 indicates a shift to the right and SLR =0 indicates a shift to the left.
SC4-0	Shift Count Control and Result bit. If SC0-4 is written with 00000, the normalization operation is performed by MDU. When the normalization is completed, SC4-0 contains the number of shifts performed during the normalization. If SC4-0 is written with a non-zero value, then the shift operation is performed by MDU with the number of shifts specified by SC4-0 value.

MD0 (0xF9) MDU Data Register 0 R/W (0x00)

	7	6	5	4	3	2	1	0
RD	MD0[7-0]							
WR	MD0[7-0]							

MD1 (0xFA) MDU Data Register 1 R/W (0x00)

	7	6	5	4	3	2	1	0
RD	MD1[7-0]							
WR	MD1[7-0]							

MD2 (0xFB) MDU Data Register 2 R/W (0x00)

	7	6	5	4	3	2	1	0
RD	MD2[7-0]							
WR	MD2[7-0]							

MD3 (0xFC) MDU Data Register 3 R/W (0x00)

	7	6	5	4	3	2	1	0
RD	MD3[7-0]							
WR	MD3[7-0]							

MD4 (0xFD) MDU Data Register 4 R/W (0x00)

	7	6	5	4	3	2	1	0
RD	MD4[7-0]							
WR	MD4[7-0]							

MD5 (0xFE) MDU Data Register 5 R/W (0x00)

	7	6	5	4	3	2	1	0
RD	MD5[7-0]							
WR	MD5[7-0]							

MDU operation consists of three phases.

1. Load MD0 to MD5 data registers in an appropriate order depending on the operation.

2. Execution of the operations.

3. Read result from MD0 to MD5 registers.

The following list shows the MDU read and write sequences. Each operation has its unique writing sequence and reading sequence of MD0 to MD5 registers, and therefore a precise access sequence is required.

9.17.1 Division – 32-bit divide by 16-bit or 16-bit divide by 16-bit

Follow the following write-sequences. The first write of MD0 resets the MDU and initiates the MDU error flag mechanism. The last write incites calculation of MDU.

Write MD0 with Dividend LSB byte

Write MD1 with Dividend LSB+1 byte

Write MD2 with Dividend LSB+2 byte (ignore this step for 16-bit divide by 16-bit)

Write MD3 with Dividend MSB byte (ignore this step for 16-bit divide by 16-bit)

Write MD4 with Divisor LSB byte

Write MD5 with Divisor MSB byte

Then follow the following read-sequences. The last read prompts MDU for the next operations.

Read MD0 with Quotient LSB byte

Read MD1 with Quotient LSB+1 byte

Read MD2 with Quotient LSB+2 byte (ignore this step for 16-bit divide by 16-bit)

Read MD3 with Quotient MSB byte (ignore this step for 16-bit divide by 16-bit)

Read MD4 with Remainder LSB byte

Read MD5 with Remainder MSB byte

Read ARCON to confirm error or overflow condition

Please note that if the sequence is violated, the calculation may be interrupted and results in errors.

9.17.2 Multiplication – 16-bit multiply by 16-bit

Follow the following write sequences.

Write MD0 with Multiplicand LSB byte

Write MD4 with Multiplier LSB byte

Write MD1 with Multiplicand MSB byte

Write MD5 with Multiplier MSB byte

Then follow the following read sequences.

Read MD0 with Product LSB byte

Read MD1 with Product LSB+1 byte

Read MD2 with Product LSB+2 byte

Read MD3 with Product MSB byte

Read ARCON to confirm error or overflow condition

9.17.3 Normalization – 32-bit

Normalization is obtained with integer variables stored in MD0 to MD3. After normalization, all leading zeroes are removed by shift left operations. To start the normalization operation, SC4-0 in ARCON is first written with

00000. After completion of the normalization, SC4-0 is updated with the number of leading zeroes and the normalized result is restored on MD0 to MD3. The number of the shift of the normalization can be used as exponents. The following write sequences should be followed. The last write to ARCON initiates the normalization operations by MDU.

Write MD0 with Operand LSB byte

Write MD1 with Operand LSB+1 byte

Write MD2 with Operand LSB+2 byte

Write MD3 with Operand MSB byte

Write ARCON with SC4-0 = 00000

Then follow the following read sequences.

Read MD0 with Result LSB byte

Read MD1 with Result LSB+1 byte

Read MD2 with Result LSB+2 byte

Read MD3 with Result MSB byte

Read SC[4-0] from ARCON for normalization count or error flag

9.17.4 Shift – 32-bit

Shift is done with integer variables stored in MD0 to MD3. To start the shift operation, SC4-0 in ARCON is first written with shift count and SLR with shift direction. After completion of the Shift, the result is stored back to MD0 to MD3.The following write sequences should be followed. The last write to ARCON initiates the normalization operations by MDU.

Write MD0 with Operand LSB byte

Write MD1 with Operand LSB+1 byte

Write MD2 with Operand LSB+2 byte

Write MD3 with Operand MSB byte

Write ARCON with SC4-0 = Shift count and SLR with shift direction

Then follow the following read sequences.

Read MD0 with Result LSB byte

Read MD1 with Result LSB+1 byte

Read MD2 with Result LSB+2 byte

Read MD3 with Result MSB byte

Read ARCON's for error flag

9.17.5 MDU Flag

The error flag (MDEF) of MDU indicates improperly performed operations. The error mechanism starts at the first MD0 write and finishes with the last read of MD result register. MDEF is set if the current operation is interrupted or restarted by improper writing of the MD register before the operation completes. MDEF is cleared if the operations and proper write/read sequences are successfully complete. The overflow flag (MDOV) of MDU indicates an error of operations. MDOV is set if

The divisor is zero

Multiplication overflows

Normalization operation is performed on already normalized variables (MD3.7 =1)

9.18 I²C Master

The I²C master controller provides the interface to I²C slave devices. It can be programmed to operate with arbitration and clock synchronization to allow it to operate in multi-master configurations. The master uses SCL and SDA pins. The controller contains a built-in 8-bit timer to allow various I²C bus speeds. The maximum I²C bus speed is limited to SYSCLK/12.

I2CMTP (0xF7) I²C Master Time Period R/W (0x00)

	7	6	5	4	3	2	1	0
RD	I2CMTP[7-0]							
WR	I2CMTP[7-0]							

This register sets the frequency of I²C bus clock. If I2CMTP[7-0] is equal to or larger than 0x01, then SCL_FREQ = SYSCLK_FREQ / 8 / (1 + I2CMTP). If I2CMTP[7-0] = 0x00, SCL_FREQ = SYSCLK_FREQ / 12.

I2CMSA (0xF4) I²C Master Slave Address R/W (0x00)

	7	6	5	4	3	2	1	0
RD	SA[6-0]							RS
WR	SA[6-0]							RS

SA[6-0]	Slave Address. SA[6-0] defines the slave address the I²C master uses to communicate.
RS	Receive/Send Bit. RS determines if the following operation is to RECEIVE (RS=1) or SEND (RS=0).

I2CMBUF (0xF6) I²C Master Data Buffer Register R/W (0x00)

	7	6	5	4	3	2	1	0
RD	RD[7-0]							
WR	TD[7-0]							

I2CMBUF functions as a transmit-data register when written and as a receive-data register when read. When written, TD is sent to the bus by the next SEND or BURST SEND operations. TD[7] is sent first. When read, RD contains the 8-bit data received from the bus upon the last RECEIVE or BURST RECEIVE operation.

I2CMCR (0xF5) I²C Master Control and Status Register R/W (0x00)

	7	6	5	4	3	2	1	0
RD	-	BUSBUSY	IDLE	ARBLOST	DATANACK	ADDRNACK	ERROR	BUSY
WR	CLEAR	INFILEN	-	HS	ACK	STOP	START	RUN

The I2CMCR register is used for setting control when it is written, and as a status signal when read.

CLEAR	Reset I²C Master State Machine Set CLEAR=1 will reset the state machine. CLEAR is self-cleared when reset is completed.
INFILEN	Input Noise Filter Enable. When IFILEN is set, pulses shorter than 50 ns on inputs of SDA and SCL are filtered out.
IDLE	This bit indicates that I²C master is in the IDLE mode.
BUSY	This bit indicates that I²C master is receiving or transmitting data, and other status bits are not valid.
BUSBUSY	This bit indicates that the external I²C bus is busy and access to the bus is not possible. This bit is set/reset by START and STOP conditions.
ERROR	This bit indicates that an error occurs in the last operation. The errors include slave address was not acknowledged, or transmitted data is not acknowledged, or the master controller loses arbitration.
ADDRNACK	This bit is automatically set when the last operation slave address transmitted is not acknowledged.
DATANACK	This bit is automatically set when the last operation transmitted data is not acknowledged.
ARBLOST	This bit is automatically set when the last operation I²C master controller loses the bus arbitration.

START, STOP, RUN and HS, RS, ACK bits are used to drive I²C Master to initiate and terminate a transaction. The Start bit generates START, or REPEAT START protocol. The Stop bit determines if the cycle stops at the end of the data cycle or continues to a burst. To generate a single read cycle, the designated address is written in SA with RS set to 1, and bits ACK=0, STOP=1, START=1, RUN=1 are set in I2CMCR to perform the operation and then STOP. When the operation is completed (or aborted due to errors), I²C master generates an interrupt. The ACK bit must be set to 1. This causes the controller to send an ACK automatically after each byte transaction. The ACK bit

must be reset when set to 0 when the master operates in receive mode and not to receive further data from the slave devices.

The following table lists the permitted control bits combinations in master IDLE mode.

HS	RS	ACK	Stop	Start	Run	Operations
0	0	-	0	1	1	START condition followed by SEND. Master remains in TRANSMITTER mode
0	0	-	1	1	1	START condition followed by SEND and STOP
0	1	0	0	1	1	START condition followed by RECEIVE operation with negative ACK. Master remains in RECEIVER mode
0	1	0	1	1	1	START condition followed by RECEIVE and STOP
0	1	1	0	1	1	START condition followed by RECEIVE. Master remains in RECEIVER mode
0	1	1	1	1	1	Illegal command

The following table lists the permitted control bits combinations in master TRANSMITTER mode.

HS	RS	ACK	Stop	Start	Run	Operations
0	-	-	0	0	1	SEND operation. Master remains in TRANSMITTER mode
0	-	-	1	0	0	STOP condition
0	-	-	1	0	1	SEND followed by STOP condition
0	0	-	0	1	1	REPEAT START condition followed by SEND. Master remains in TRANSMITTER mode
0	1	-	1	1	1	REPEAT START condition followed by SEND and STOP condition
0	1	0	0	1	1	REPEAT START condition followed by RECEIVE operation with negative ACK. Master remains in TRANSMITTER mode
0	1	0	1	1	1	REPEAT START condition followed by SEND and STOP condition
0	1	1	0	1	1	REPEAT START condition followed by RECEIVE. Master remains in RECEIVER mode
0	1	1	1	1	1	Illegal command

The following table lists the permitted control bits combinations in master RECEIVER mode.

HS	RS	ACK	Stop	Start	Run	Operations
0	-	0	0	0	1	RECEIVE operation with a negative ACK. Master remains in RECEIVE mode
0	-	-	1	0	0	STOP condition
0	-	0	1	0	1	RECEIVE followed by STOP condition
0	-	1	0	0	1	RECEIVE operation. Master remains in RECEIVER mode
0	-	1	1	0	1	Illegal command
0	1	0	0	1	1	REPEAT START condition followed by RECEIVE operation with a negative ACK. Master remains in RECEIVER mode
0	1	0	1	1	1	REPEAT START condition followed by RECEIVE and STOP conditions
0	1	0	1	1	1	REPEAT START condition followed by RECEIVE. Master remains in RECEIVER mode
0	0	-	0	1	1	REPEAT START condition followed by SEND. Master remains in TRANSMITTER mode
0	0	-	1	1	1	REPEAT START condition followed by SEND and STOP conditions

All other control-bit combinations not included in the above three tables are NOP. In Master RECEIVER mode, STOP should be generated only after data negative ACK executed by Master or address negative ACK executed by slave. Negative ACK means SDA is pulled low when the acknowledge clock pulse is generated.

I2CMTO (0xC3) I2CTime Out Control Register R/W (0x00)

	7	6	5	4	3	2	1	0
RD	I2CMTOF	I2CMTO[6-0]						
WR	I2CMTOEN	I2CMTO[6-0]						

I2CMTOEN — I2CM Time out Enable

I2CMTOF — I2CM Time out Flag
This bit is set when a timeout occurs. It is cleared when I2CM CLEAR command is issued.

I2CMTO[6-0] — I2CM Time Out Setting
The TO time is set to (I2CMTO[6-0]+1)*2*BT. When timeout occurs, an I2CM interrupt will be generated. Where BT = 1 / (SYSCLK_FREQ / 8 / (I2CMTP[7-0]+1)) .

9.19 Checksum/CRC Accelerator

To enhance the performance, a hardware Checksum/CRC Accelerator is included and closely coupled with CPU. This provides most commonly used checksum and CRC operation for 8/16/24/32-bit data width. For 8-bit data, one SYSCLK cycle is used; for 16-bit data, two cycles are used; for 32-bit data, four cycles are used.

CCCFG (0xA078) Checksum/CRC Accelerator Configuration Register R/W (0x00)

	7	6	5	4	3	2	1	0
RD	DWIDTH[1-0]		REVERSE	NOCARRY	SEED	-	-	BUSY
WR	DWIDTH[1-0]		REVERSE	NOCARRY	SEED	CRCMODE[2-0]		

DWIDTH[1-0] — Data Input Width
00 – set input as 8-bit wide
01 – set input as 16-bit wide
10 – set input as 24-bit wide
11 – set input as 32-bit wide

REVERSE — Reverse input MSB/LSB Sequence
REVERSE=0 is for LSB first operations.
REVERSE=1 is for MSB first operation.
The reverse order is based on the data width. For example, if the data width is 32-bit, and REVERSE=1, then CCDATA[0] holds MSB, and CCDATA[31] holds LSB.
REVERSE does not affect output result and SEED ordering i.e., CCDATA[31] always holds MSB, CCDATA[0] always holds LSB.
The following table shows the MSB/LSB relationship

DWIDTH	REVERSE=0	REVERSE=1
0	CRCIN[7-0] = CCDATA[7-0]	CRCIN[7-0] = CCDATA[0-7]
1	CRCIN[15-0] = CCDATA[15-0]	CRCIN[15-0] = CCDATA[0-15]
2	CRCIN[23-0] = CCDATA[23-0]	CRCIN[23-0] = CCDATA[0-23]
3	CRCIN[31-0] = CCDATA[31-0]	CRCIN[31-0] = CCDATA[0-31]

NOCARRY — Carry Setting for Checksum
NOCARRY=0 uses the previous carry result the for a new result.
NOCARRY=1 discards the previous carry result.

SEED — Seed Entry
For SEED=1, results written into CCDATA become SEED value.
SEED=0 for normal data inputs
Please note that the MSB/LSB ordering of SEED entry from CCDATA is not affected by REVERSE.

CRCMODE[2-0] — CRC/Checksum Mode
000 – Accelerator is disabled and the clock is gated off
001 – 8-bit Checksum
010 – 32-bit Checksum

011 – CRC-16 (IBM 0x8005)
X16+X15+X2+1
100 – CRC-16 (CCITT 0x1021)
X16+X12+X5+1
101 – CRC-32 (ANSI 802.3 0x104C11DB7)
X32+X26+C23+X22+X16+X12+X11+X10+X8+X7+X5+X4+X2+X1+1
110 – Reserved
111 – CRC and Checksum Clear

The first step for the programmer is to set the CRCMODE[2-0] for the Checksum or CRC operation and then write "111" to CRCMODE[2-0] to reset the Checksum/CRC states and restore the default seed value (for checksum, seed value=0x00 or 0x00000000, for CRC seed value = 0xFFFF or 0xFFFFFFF).

BUSY — CRC Status
BUSY=1 indicates the result is not yet completed. Since only up to two cycles are used to calculate the Checksum or CRC, there is no need to check the BUSY status before the next data entry and reading the results.

CCDATA registers are the data I/O port for Checksum/CRC Accelerator. For 8-bit data width, only CCDATA[7-0] should be used. For data width wider than 8-bit, the high byte should always be written first. Writing the low byte (CCDATA0) completes the data entry and starts the calculations. When SEED=1, the data written goes to CS or CRC seed value. The SEED value entry bit ordering is not affected by the REVERSE setting. The result of the accelerator can be directly read out from CCDATA registers and it is not affected by the REVERSE setting.

CCDATA0 (0xA07C) Checksum/CRC Data Register 0 R/W (0x00)

	7	6	5	4	3	2	1	0
RD	CCDATA[7-0]							
WR	CCDATA[7-0]							

CCDATA1 (0xA07D) Checksum/CRC Data Register 1 R/W (0x00)

	7	6	5	4	3	2	1	0
RD	CCDATA[15-0]							
WR	CCDATA[15-0]							

CCDATA2 (0xA07E) Checksum/CRC Data Register 2 R/W (0x00)

	7	6	5	4	3	2	1	0
RD	CCDATA[23-16]							
WR	CCDATA[23-16]							

CCDATA3 (0xA07F) Checksum/CRC Data Register 2 R/W (0x00)

	7	6	5	4	3	2	1	0
RD	CCDATA[31-24]							
WR	CCDATA[31-24]							

9.20 Break Point and Debug Controller

The CPU core also includes a Break Point Controller for software debugging purposes and handling exceptions. Program Counter breakpoint triggers at PC address matching, and there are seven PC matching settings available. Single Step breakpoint triggers at interaction return from an interrupt routine.

Upon the matching of breakpoint conditions, the Break Point Controller issues BKP Interrupt for handling the breakpoints. The BKP Interrupt vector is located at 0x7B. Upon entering the BKP ISR (Break Point Interrupt Service Routine), all interrupts and counters (WDT, T0, T1, and T2) are disabled. To allow further interrupts and continuing counting, the BKP ISR must be enabled. At exiting, the BKP ISR setting must be restored to resume normal operations.

BPINTF (0xA0E0) Break Point Interrupt Flag Register R/W (0x00)

	7	6	5	4	3	2	1	0
RD	STEP_IF	-	-	-	-	-	PC2IF	PC1IF
WR	STEP_IF	-	-	-	-	-	PC2IF	PC1IF

This register is for reading the Break Points interrupt flags.

STEP_IF	This bit is set when the Break Point conditions are met by a new instruction fetching from an interrupt routine. This bit must be cleared by software.
PC2IF – PC1IF	These bits are set when Break Point conditions are met by PC2 – PC1 address. These bits must be cleared by software.

BPINTE (0xA0E1) Break Point Interrupt Enable Register R/W (0x00) TB Protected

	7	6	5	4	3	2	1	0
RD	STEP_IE	-	-	-	-	-	PC2IE	PC1IE
WR	STEP_IE	-	-	-	-	-	PC2IE	PC1IE

This register controls the enabling of individual Break Points interrupt.

STEP_IE	Set this bit to enable Single Step event breakpoint interrupt.
PC2IE – PC1IE	Set these bits to enable PC2 to PC1 address match breakpoint interrupts.

BPINTC (0xA0E2) Break Point Interrupt Control Register R/W (0x00)

	7	6	5	4	3	2	1	0
RD	-	-	-	-	-	-	-	-
WR	-	-	-	-	-	-	-	-

This register is reserved for other applications.

BPCTRL (0xA0E3) DBG and BKP ISR Control and Status Register R/W (b'11111100)

	7	6	5	4	3	2	1	0
RD	DBGINTEN	DBGWDTEN	DBGT2EN	DBGT1EN	DBGT0EN	-	-	DBGGST
WR	DBGINTEN	DBGWDTEN	DBGT2EN	DBGT1EN	DBGT0EN	-	-	DBGGST

When entering the DBG or BKP ISR (Interrupt Service Routine), all interrupts and timers are disabled. The enabled bits are cleared by hardware reset in this register. As the interrupts and timers are disabled, the ISR can process debugging requirements in a suspended state. If a specific timer should be kept active, it must be enabled by ISR after ISR entry. Before the exit of DBG and BKP ISR, the control bits should be enabled to allow the timers to resume operating. This register should be modified only in Debug ISR.

DBGINTEN	Set this bit to enable all interrupts (except WDT interrupt). This bit is cleared automatically at the entry of DBG and BKP ISR. Set this bit to allow ISR to be further interrupted by other interrupts. This is sometimes necessary if DBG or BKP ISR needs to use UART or I^2C, for example.
DBGWDEN	Set this bit to allow WDT counting during the DBG and BKP ISR. This bit should always be set before exiting the ISR.
DBGT2EN	Set this bit to allow T2 counting during the DBG and BKP ISR. This bit should always be set before exiting the ISR. This bit only controls the counting but not T2 interrupt.
DBGT1EN	Set this bit to allow T1 counting during the DBG and BKP ISR. This bit should always be set before exiting the ISR. This bit only controls the counting but not T1 interrupt.
DBGT0EN	Set this bit to allow T0 counting during the DBG and BKP ISR. This bit should always be set before exiting the ISR. This bit only controls the counting but not T0 interrupt.
DBGST	This bit indicates the DBG and BKP ISR status. It is set to 1 when entering DBG and BKP ISR. It should be cleared when exiting the DBG and BKP ISR. Checking this bit allows other interrupt routines to determine whether it is a sub-service of the DBG and BKP ISR.

PC1AL (0xA0F0) Program Counter Break Point 1 Low Address Register R/W (0x00)

	7	6	5	4	3	2	1	0
RD	PC1AL[7-0]							
WR	PC1AL[7-0]							

This register defines the PC low address for PC match break point 1.

PC1AH (0xA0F1) Program Counter Break Point 1 High Address Register R/W (0x00)

	7	6	5	4	3	2	1	0
RD	PC1AH[7-0]							
WR	PC1AH[7-0]							

This register defines the PC high address for PC match break point 1.

PC1AT (0xA0F2) Program Counter Break Point 1 Top Address Register R/W (0x00)

	7	6	5	4	3	2	1	0
RD	PC1AT[7-0]							
WR	PC1AT[7-0]							

This register defines the PC top address for PC match break point 1. PC1AT:PC1HT:PC1LT together form a 24 bit compare value of break point 1 for Program Counter.

PC2AL (0xA0F4) Program Counter Break Point 2 Low Address Register R/W (0x00)

	7	6	5	4	3	2	1	0
RD	PC2AL[7-0]							
WR	PC2AL[7-0]							

This register defines the PC low address for PC match breakpoint 2.

PC2AH (0xA0F5) Program Counter Break Point 2 High Address Register R/W (0x00)

	7	6	5	4	3	2	1	0
RD	PC2AH[7-0]							
WR	PC2AH[7-0]							

This register defines the PC high address for PC match breakpoint 2.

PC2AT (0xA0F6) Program Counter Break Point 2 Top Address Register R/W (0x00)

	7	6	5	4	3	2	1	0
RD	PC2AT[7-0]							
WR	PC2AT[7-0]							

This register defines the PC top address for PC match breakpoint 2. PC2AT, PC2HT and PC2LT together form a 24-bit compare value of PC breakpoint 2 for Program Counter.

Host or program can obtain the status of the breakpoint controller through the current breakpoint address and next PC address register. DBPCID[23-0] contains the PC address of the just executed instruction when the breakpoint occurs. DBNXPC[23-0] contains the next PC address to be executed when the breakpoint occurs, and therefore it is usually exactly the same value of the breakpointer setting.

DBPCIDL (0xA098) Debug Program Counter Address Low Register RO (0x00)

	7	6	5	4	3	2	1	0
RD	DBPCID[7-0]							
WR	-							

DBPCIDH (0xA099) Debug Program Counter Address High Register RO (0x00)

	7	6	5	4	3	2	1	0
RD	DBPCID[15-8]							
WR	-							

DBPCIDT (0xA09A) Debug Program Counter Address Top Register RO (0x00)

	7	6	5	4	3	2	1	0
RD	DBPCID[23-16]							
WR	-							

DBPCNXL (0xA09B) Debug Program Counter Next Address Low Register RO (0x00)

	7	6	5	4	3	2	1	0
RD	DBPCNX[7-0]							
WR	-							

DBPCNXH (0xA09C) Debug Program Counter Next Address High Register RO (0x00)

	7	6	5	4	3	2	1	0
RD	DBPCNX[15-8]							
WR	-							

DBPCNXT (0xA09D) Debug Program Counter Next Address Top Register RO (0x00)

	7	6	5	4	3	2	1	0
RD	DBPCNX[23-16]							
WR	-							

STEPCTRL (0xA09E) Single Step Control Enable Register R/W (0x00)

	7	6	5	4	3	2	1	0
RD	STEPCTRL[7-0]							
WR	STEPCTRL[7-0]							

To enable single-step debugging, STEPCTRL must be written with value 0x96.

9.21 Debug I²C Port

The I²C Slave 2 (I2CS2) can be configured as the debug and ISP port. This is achieved by assigning a predefined debug ID for the I²C Slave address. When a host issues I²C access to this special address, a DBG interrupt is generated. DBG Interrupt has the highest priority. The DBG interrupt vector is located at 0x83. DBG ISR is used to communicate with the host and is usually closely associated with BKP ISR.

SI2CDBGID (0xA09F) Slave I²C Debug ID Register R/W (0x36) TB Protected

	7	6	5	4	3	2	1	0
RD	DBGSI2C2EN	SI2CDBGID[6:0]						
WR	DBGSI2C2EN	SI2CDBGID[6:0]						

DBGSI2C2EN — DBGSI2C2EN=1 enables I2CS2 as debug port. When I2CS2 receives access of I²C address matching SI2CDBGID[6:0], a debug interrupt is generated.

SI2CDBGID[6:0] — Slave I²C ID address for debug function.

9.22 Data SRAM ECC Handling

The data SRAM (IRAM and XRAM) is configured as 2048 x 13-bit. An 8:5 ECC encoder and decoder are implemented to check the SRAM data. ECC check is through hardware and performed automatically. It can correct a 1-bit error in each byte and detect a 2-bit error in each byte. All generation and checking are done in hardware. It is strongly recommended all SRAM data should be initialized at power-on or after reset if ECC is enabled to avoid initial ECC error. If ECC encounters an uncorrectable error, hardware will latch the address and trigger an interrupt. Software needs to examine the severity of data corruption and take appropriate actions. Please note that, during

switching between ECC and non-ECC mode, all the data in SRAM will be corrupted, and thus requires re-initialization. It is strongly suggested to keep ECC enabled for best reliability as well as noise immunity.

DECCCFG (0xA02D) Data ECC Configuration Register R/W (0x80) TB Protected

	7	6	5	4	3	2	1	0
RD	DECCEN	-	DECCIEN2	DECCIEN1	-	-	DECCIF2	DECCIF1
WR	DECCEN	-	DECCIEN2	DECCIEN1	-	-	DECCIF2	DECCIF1

DECCEN — Data ECC Enable

DECCIEN2 — Data ECC Uncorrectable Error Interrupt Enable

DECCIEN1 — Data ECC Correctable Error Interrupt Enable

DECCIF2 — Data ECC Uncorrectable Error Interrupt Flag

DECCIF2 is set to 1 by hardware when reading SRAM encounters an uncorrectable error. DECCIF2 is set independent of DECCIEN2. DECCIF2 needs to be cleared by software.

DECCIF1 — Data ECC Correctable Error Interrupt Flag

DECCIF1 is set to 1 by hardware when reading SRAM encounters a correctable error. DECCIF1 is set independent of DECCIEN1. DECCIF1 needs to be cleared by software.

Please note that if a correctable error is encountered, the data will be automatically corrected. To prevent further corruption, software should rewrite the data into the SRAM upon DECCIF1 interrupt.

DECCADL (0xA02E) Data ECC Configuration and Address Register Low RO (0x00)

	7	6	5	4	3	2	1	0
RD	DECCAD[7-0]							
WR	-							

DECCADH (0xA02F) Data ECC Configuration and Address Register High RO (0x80)

	7	6	5	4	3	2	1	0
RD	DECCAD[15-8]							
WR	-							

DECCAD[15-0] records the address of ECC fault when data SRAM ECC error occurs. It is read-only and reflects the error address that causes DECCIF to be set. If DECCIF is set and not cleared, DECCAD will not be updated if a +further error is detected.

9.23 Program ECC Handling

The program code stored in e-Flash has built-in ECC checking. The e-Flash is in 16-bit width, and when read by CPU, the lower LSB 8-bit is read for instruction and the upper MSB 8-bit contains the ECC value of the LSB 8-bit. The ECC is nibble based, [15-12] is ECC for [7-4], and [11-8] is ECC for [3-0]. Four bits ECC for four bits data allows one bit error correction and two bits error detection. This means it is possible for 2-bit error correction of an 8-bit code, and this greatly increases the reliability of the overall program robustness.

During program fetch and execution, ECC is performed simultaneously by hardware. If any ECC correctable error is detected, the value fetched is corrected, and optionally a PECCIEN1 interrupt can be generated. If any ECC non-correctable error is detected, two options can be configured, either a PECCIEN2 interrupt can be generated or a software reset can be generated. In both PECCIEN interrupts, the address of the error encountered is latched in PECCAD[15-0].

PECCCFG (0xA00D) Program ECC Configuration Register R/W (0x80) TB Protected

	7	6	5	4	3	2	1	0
RD	FCECCEN	-	PECCIEN2	PECCIEN1	-	-	PECCIF2	PECCIF1
WR	FCECCEN	-	PECCIEN2	PECCIEN1	-	-	PECCIF2	PECCIF1

FCECCEN — Flash Controller Read ECC Control

This bit controls the Flash Controller Read command. If FCECCEN=1, then the Flash Controller read low byte contains ECC corrected data. If FCECCEN=0, then the read operation returns the raw data from e-Flash.

PECCIEN2 — Program ECC Uncorrectable Error Interrupt Enable

PECCIEN1 — Program ECC Correctable Error Interrupt Enable

PECCIF2 Program ECC Uncorrectable Error Interrupt Flag
PECCIF2 is set to 1 by hardware when program fetching from e-Flash encounters uncorrectable error. PECCIF2 is set independent of PECCIEN2. PECCIF2 needs to be cleared by software.

PECCIF1 Program ECC Correctable Error Interrupt Flag
PECCIF1 is set to 1 by hardware when program fetching from e-Flash encounters correctable error. PECCIF1 is set independent of PECCIEN1. PECCIF1 needs to be cleared by software.

PECCADL (0xA00E) Program ECC Fault Address Register Low RO (0x00)

	7	6	5	4	3	2	1	0
RD	PECCAD[7-0]							
WR	-							

PECCADH (0xA00F) Program ECC Fault Address Register High R/W (0x80)

	7	6	5	4	3	2	1	0
RD	PECCAD[15-8]							
WR	-							

PECCAD[15-0] records the address of ECC fault when Flash ECC error occurs. It is read-only and reflects the last error address.

Note: PECCAD[15:14] always read as 0, and software needs to update PECCAD[15:14] value as 0~3 for flash correction once PECCIF1 was detected

9.24 Memory and Logic BIST Test

BSTCMD (0xA016) SRAM Built-In and Logic Self-Test R/W (0x00) TB Protected

	7	6	5	4	3	2	1	0
RD	MODE[3-0]				BST	-	FAIL	FINISH
WR	MODE[3-0]				BSTCMD[3-0]			

MODE[3-0] BIST Mode Selection
0000 – Normal Mode
0001 – SRAM MBIST
0010 – Reserved
0011 – Reserved
0100 – Register LBIST
0101 – Reserved
0110 – Reserved
0111 – Reserved
1000 – Normal Mode
1001 – SRAM MBIST and monitor on pins
1010 – Reserved
1011 – Reserved
1100 – Register LBIST and monitor on pins
1101 – Reserved
1110 – Reserved
1111 – Reserved
Please note that MODE[3-0] is cleared only by POR and RSTN. Software can read this setting along with the Pass/Fail status to determine which BIST was performed and its result even after a software reset.

BST BIST Status
BST is set to 1 by hardware when BIST in ongoing.

FAIL BIST Test Fail Flag
FAIL is set to 1 by hardware when a BIST error has occurred. FAIL is cleared to 0 by hardware when a new BIST command is issued.

FINISH BIST Completion Flag

	FINISH is set to 1 by hardware when the BIST controller finishes the test. FINISH is cleared to 0 by hardware when a new BIST command is issued.
BSTCMD[3-0]	Memory BIST Command Writing BSTCMD[3-0] with value 4b'0101 causes the BIST controller to perform BIST. Writing BSTCMD[3-0] with value 4b'1010 causes the BIST controller to perform BIST, and after BIST is completed, it automatically generates a software reset. Writing BSTCMD[3-0] with value 4b'0000 causes FAIL and FINISH bits to be cleared to 0. Any other value will either have no effect or abort any ongoing BIST.

After the BSTCMD is issued, CPU is paused until BIST is completed. Any BIST operation will result in undefined CPU states, and undefined SRAM content. Therefore, it is highly recommended that a software reset or initiation should be performed after any BIST operation. Please also note that MODE[3-0], FINISH and FAIL bits are not cleared by software resets.

TSTMON (0xA014) Test Monitor Flag R/W (0x00)

	7	6	5	4	3	2	1	0
RD	TSTMON[7-0]							
WR	TSTMON[7-0]							

TSTMON register stores temporary status and is initialized by power-on reset only.

9.25 System Clock Monitoring

SYSCLK in normal running mode is monitored by SOSC32KHz. If SYSCLK is not present in normal mode for a duration of four SOSC32KHz cycles, a hardware reset is triggered.

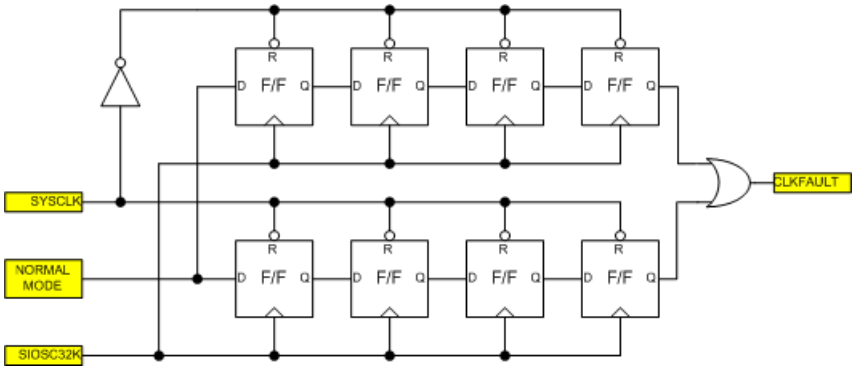

Figure 9-10 System clock monitoring

9.26 Reset

There are several reset sources which include both software resets and hardware resets. Software resets include command reset, WDT reset and ECC error reset. Hardware resets include power-on reset (low voltage detect on VDDC), LVD reset (low voltage detect on VDD), SYSCLK monitor reset, and external RSTN reset. Software reset only restores some registers to default values, and hardware reset restores all registers to their default values.

RSTN reset will filter out any low glitch on RSTN with less than 4msec. All hardware reset conditions once met will be extended by 4 msec when exiting reset. Internal hardware reset also has feedback to the RSTN pin and extends the reset duration by external RSTN R/C time. The reset scheme is shown in the following diagram.

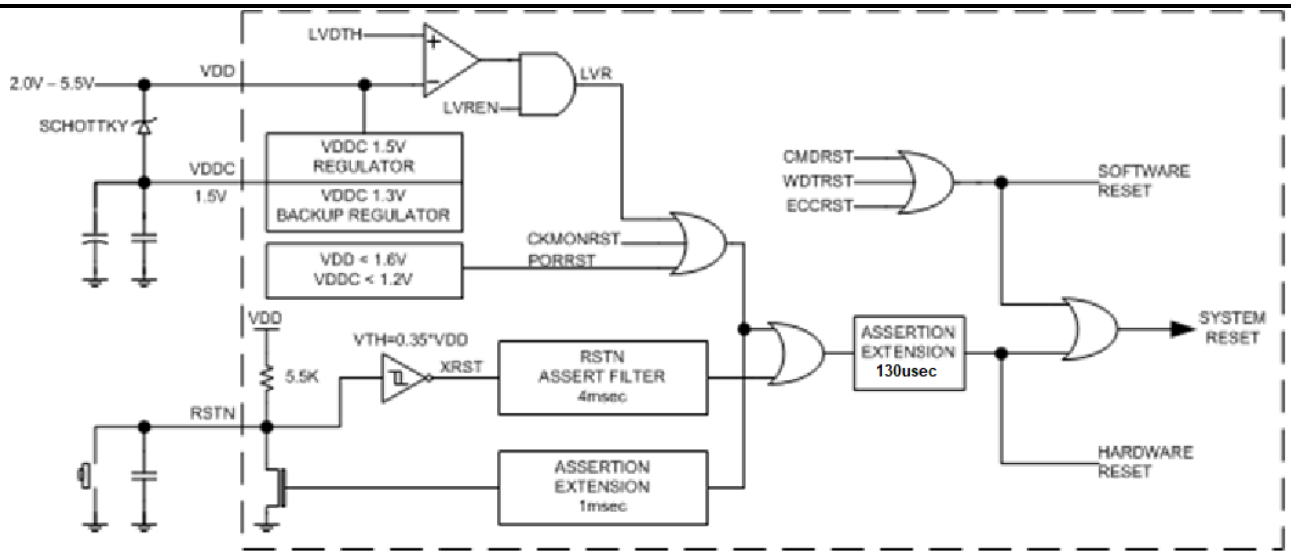

Figure 9-11 Reset block diagram

RSTCMD (0xA017) Reset Command Register R/W (0x00) TB Protected

	7	6	5	4	3	2	1	0
RD	-	-	-	-	CKMRF	ECCRF	WDTRF	CMDRF
WR	RSTCKM	RSTECC	-	CLRF	RSTCMD[3-0]			

RSTCKM — Reset Enable for Clock Monitor Fault
RENCKM=1 enables reset after clock fault detection. RSTCKM is cleared to 0 after any reset. Default RSTCKM is 0.

RSTECC — Reset Enable for Uncorrectable Code Fetch ECC Error
RSTECC=1 enables reset at e-Flash code fetch ECC error. Default RSTECC is 0.

CKMRF — Clock Monitor Fault Reset Flag
CKMRF is set to 1 by hardware when a clock fault reset has occurred. CKMRF is not cleared by reset except power-on reset.

ECCRF — ECC Error Reset Flag
ECCRF is set to 1 by hardware when an ECC error reset has occurred. ECCRF is cleared to 0 when writing CLRF=1. ECCRF is not cleared by reset except power-on reset.

WDTRF — WDT Reset Flag
WDTRF is set to 1 by hardware when WTRF, WT1RF or WT2RF is set.

CLRF — Clear Reset Flag
Writing 1 to CLRF will clear CKMRF, ECCRF, WDTRF, and CMDRF. It is self-cleared.

RSTCMD[3-0] — Software Reset Command
Writing RSTCMD[3-0] with consecutive 4b'0101, 4b'1010 sequences will cause a software reset. Any other value will clear the sequence state. These bits are write-only and self-cleared.

Note: Bits 4~7 of RSTCMD register can't be read.

10. Flash Controller

The flash controller connects the CPU to the on-chip embedded FLASH memory. The FLASH memory functions as the program storage as well as non-volatile data storage. The program access of the FLASH does not require any special attention. When an ECC error occurs during program fetch, there comes out ECC interrupt or reset.

When the FLASH is used as data storage, software issues commands to the FLASH controller through the XFR registers. And when the FLASH controller processes these commands, CPU is held idle until the commands are completed. There is a timeout mechanism for holding CPU in idle to prevent operations hang up.

From FLASH controller point of view, the embedded Flash is always in 16-bit width with no distinction between ECC and data information. For code storage through FLASH controller, ECC byte (upper MSB 8-bit) must be calculated by software. During the read command, ECC is detected but not corrected, and the raw content is loaded into FLSHDAT[15-0]. If ECC error is detected, FAIL status is set after the read command.

The e-Flash contains 128 pages (also referred as Sector), and each page is 512x16. It also contains two IFB (Information Blocks) pages. In Flash operation, the erase command only operates on units of page.

FLSHCMD (0xA025) Flash Controller Command Register R/W (0x80) TB Protected

	7	6	5	4	3	2	1	0
RD	WRVFY	BUSY	FAIL	CMD4	CMD3	CMD2	CMD1	CMD0
WR	CYC[2-0]			CMD4	CMD3	CMD2	CMD1	CMD0

WRVFY — Write Result Verify. At the end of a write cycle, hardware reads back the data and compares it with which should be written to the flash. If there is a mismatch, this bit represents 0. It is reset to 1 by hardware when another ISP command is executed.

BUSY — Flash command is in processing. This bit indicates that Flash Controller is executing the Flash Read, Write, or Sector Erase and other commands are not valid.

FAIL — Command Execution Result. It is set if the previous command execution fails due to any reason. It is recommended that the program should verify the command execution after issuing a command to the Flash controller. It is not cleared by reading when a new command is issued. Possible causes of FAIL include address out of range, or address falls into protected region, ECC read error, and command timeout.

Program should check RSTCMD[2] for a flash operation if FLSHCMD[5] (FAIL) is set. Once RSTCMD[2] (ECCRF) is 1, the program must write RSTCMD[4] as 1 to clear ECCRF, or all the future ECC errors can't be responded to PECCAD[15:0]

CYC[2-0] — Flash Command Time Out

CYC[2-0] defines command timeout cycle count. Cycle period is defined by ISPCLK, which is SYSCLK/256/(ISPCLKF[7-0]+1). The number of cycles is tabulated as following.

CYC[2-0]			WRITE	ERASE
0	0	0	55	5435
0	0	1	60	5953
0	1	0	65	6452
0	1	1	69	6897
1	0	0	75	7408
1	0	1	80	7906
1	1	0	85	8404
1	1	1	89	8889

For normal operations, CYC[2-0] should be set to 111.

CMD4 – CMD0 — Flash Command

These bits define commands for the Flash controller. The valid commands are listed in the following table. Any invalid commands do not get executed but return with a Fail bit.

CMD4	CMD3	CMD2	CMD1	CMD0	Command
1	0	0	0	0	Main Memory Read

CMD4	CMD3	CMD2	CMD1	CMD0	Command
0	1	0	0	0	Main Memory Sector Erase
0	0	1	0	0	Main Memory Write
0	0	0	1	0	IFB Read
0	0	0	0	1	IFB Write
0	0	0	1	1	IFB Sector Erase

For any Read command, the result high byte contains the ECC code, and low byte contains the data that is ECC corrected. If there is any ECC error, then FAIL bit is set. To find out what ECC error occurs, software can inspect PECCIF1 and PEECIF2 bits in PECCCFG register.
To read the e-Flash raw data, the FCECCEN in PECCCFG register can be set to 0.

FLSHDATL (0xA020) Flash Controller Data Register R/W (0x00)

	7	6	5	4	3	2	1	0
RD	Flash Read Data Register DATA[7-0]							
WR	Flash Write Data Register DATA[7-0]							

Please note: DATA[7-0] in READ operation will return either ECC corrected data or e-Flash raw data and which depends on FCECEEN bit setting in PECCCFG register.

FLSHDATH (0xA021) Flash Controller Data Register R/W (0x00)

	7	6	5	4	3	2	1	0
RD	Flash Read Data Register DATA[15-8]							
WR	Flash Write Data Register DATA[15-8]							

FLSHADL (0xA022) Flash Controller Low Address Data Register R/W (0x00)

	7	6	5	4	3	2	1	0
RD	Flash Address Low Byte Register ADDR[7-0]							
WR	Flash Address Low Byte Register ADDR[7-0]							

FLSHADH (0xA023) Flash Controller High Address Data Register R/W (0x00)

	7	6	5	4	3	2	1	0
RD	Flash Address High Byte Register ADDR[15-8]							
WR	Flash Address High Byte Register ADDR[15-8]							

FLSHECC (0xA024) Flash ECC Accelerator Register R/W

	7	6	5	4	3	2	1	0
RD	ECC[7-0]							
WR	DATA[7-0]							

FLSHECC aids the calculation of ECC value of an arbitrary 8-bit data. The data is written to FLSHECC, and its corresponding ECC value can be read out from ECC.

ISPCLKF (0xA026) Flash Command Clock Scaler R/W (0x25) TB Protected

	7	6	5	4	3	2	1	0
RD	ISPCLKF[7-0]							
WR	ISPCLKF[7-0]							

ISPCLKF[7-0] configures the clock time base for generation of Flash erase and write timing. ISPCLK = SYSCLK*(ISPCLKF[7-0]+1)/256. For correct timing, ISPCLK should be set to approximately at 2MHz.

The e-Flash has protection segment size of 1024 x 16. Each protection segment zone includes two Flash pages (also referred as Sector). For IS31CS8979, there are 64 segments at total 64K x 16. Each segment (or called zone) is separately protected by corresponding two bits, PRT and PPT. PRT default after reset is 0 and PPT is 1, where 0

means protected, and 1 means unprotected. Both bits need to be 1 for modification and erasure. PPT (permanent) can be written 0 only and once written 0, it stays 0 until reset. The protection mechanism is the same for IFB0 and IFB1.

FLSHPRT0 (0xA030) Flash Zone Protection Register 0 R/W (0x00) TB Protected

	7	6	5	4	3	2	1	0
RD	FLSHPRT[7-0]							
WR	FLSHPRT[7-0]							

FLSHPRT1 (0xA031) Flash Zone Protection Register 1 R/W (0x00) TB Protected

	7	6	5	4	3	2	1	0
RD	FLSHPRT[15-8]							
WR	FLSHPRT[15-8]							

FLSHPRT2 (0xA032) Flash Zone Protection Register 2 R/W (0x00) TB Protected

	7	6	5	4	3	2	1	0
RD	FLSHPRT[23-16]							
WR	FLSHPRT[23-16]							

FLSHPRT3 (0xA033) Flash Zone Protection Register 3 R/W (0x00) TB Protected

	7	6	5	4	3	2	1	0
RD	FLSHPRT[31-24]							
WR	FLSHPRT[31-24]							

FLSHPRT4 (0xA034) Flash Zone Protection Register 4 R/W (0x00) TB Protected

	7	6	5	4	3	2	1	0
RD	FLSHPRT[39-32]							
WR	FLSHPRT[39-32]							

FLSHPRT5 (0xA035) Flash Zone Protection Register 5 R/W (0x00) TB Protected

	7	6	5	4	3	2	1	0
RD	FLSHPRT[47-40]							
WR	FLSHPRT[47-40]							

FLSHPRT6 (0xA036) Flash Zone Protection Register 6 R/W (0x00) TB Protected

	7	6	5	4	3	2	1	0
RD	FLSHPRT[55-48]							
WR	FLSHPRT[55-48]							

FLSHPRT7 (0xA037) Flash Zone Protection Register 7 R/W (0x00) TB Protected

	7	6	5	4	3	2	1	0
RD	FLSHPRT[63-56]							
WR	FLSHPRT[63-56]							

FLSHPPT0 (0xA0C0) Flash Zone Protection Permanent Register 0 R/W (0xFF) TB Protected

	7	6	5	4	3	2	1	0
RD	FLSHPPT[7-0]							
WR	FLSHPPT[7-0]							

FLSHPPT1 (0xA0C1) Flash Zone Protection Permanent Register 1 R/W (0xFF) TB Protected

	7	6	5	4	3	2	1	0
RD	FLSHPPT[15-8]							
WR	FLSHPPT[15-8]							

FLSHPPT2 (0xA0C2) Flash Zone Protection Permanent Register 2 R/W (0xFF) TB Protected

	7	6	5	4	3	2	1	0
RD	FLSHPPT[23-16]							
WR	FLSHPPT[23-16]							

FLSHPPT3 (0xA0C3) Flash Zone Protection Permanent Register 3 R/W (0xFF) TB Protected

	7	6	5	4	3	2	1	0
RD	FLSHPPT[31-24]							
WR	FLSHPPT[31-24]							

FLSHPPT4 (0xA0C4) Flash Zone Protection Permanent Register 4 R/W 0xFF) TB Protected

	7	6	5	4	3	2	1	0
RD	FLSHPPT[39-32]							
WR	FLSHPPT[39-32]							

FLSHPPT5 (0xA0C5) Flash Zone Protection Permanent Register 5 R/W (0xFF) TB Protected

	7	6	5	4	3	2	1	0
RD	FLSHPPT[47-40]							
WR	FLSHPPT[47-40]							

FLSHPPT6 (0xA0C6) Flash Zone Protection Permanent Register 6 R/W (0xFF) TB Protected

	7	6	5	4	3	2	1	0
RD	FLSHPPT[55-48]							
WR	FLSHPPT[55-48]							

FLSHPPT7 (0xA0C7) Flash Zone Protection Permanent Register 7 R/W (0xFF) TB Protected

	7	6	5	4	3	2	1	0
RD	FLSHPPT[63-56]							
WR	FLSHPPT[63-56]							

FLSHPTI (0xA0C8) Flash IFB Protection Register R/W (0bXX11XX00) TB Protected

	7	6	5	4	3	2	1	0
RD	-	-	IFBPPT1	IFBPPT0	-	-	IFBPRT1	IFBPRT0
WR	-	-	IFBPPT1	IFBPPT0	-	-	IFBPRT1	IFBPRT0

FLSHPRTC (0xA027) Flash Controller Code Protection Register R/W (0x00) TB Protected

	7	6	5	4	3	2	1	0
RD	-							STAT
WR	FLSHPRTC[7-0]							

This register further protects the code space (0x0000 – 0xFFFF). The protection is on after any reset. Software writes “55” into this register to turn off protection. However, protection is maintained until a wait time (approximately 300msec) has expired. The 300msec delay prevents any false action due to power or interfaces transient. Any write value other than “55” will turn on the protection immediately. STAT indicates the protection status. STAT=1 indicates the protection is off, and STAT=0 indicates the protection is on.

FLSHVDD (0xA015) Flash VDD Switch Control Register R/W (0x00) TB Protected

	7	6	5	4	3	2	1	0
RD	-							SLEEPSW
WR	FLSHVDD[7-0]							

FLSHVDD is used to control the supply voltage to the e-Flash during sleep mode. Writing FLSHVDD with 0x55 will set SLEEPSW to 1. If SLEEPSW=1, the power supply to the e-Flash is turned off during sleep mode. The default for SLEEPSW is 0, so the e-Flash supply is always on.

11. I²C Slave Controller 2 (I2CS2)

The I²C Slave Controller 2 has dual functions – as a debug port for communication with the host or as a regular I²C slave port. Both functions can coexist. I²C Slave 2 controller also supports the clock stretching functions.

The debug accessed by the host is through I²C slave address defined by SI2CSDBGID register and enabled by DBGSI2C2EN=1. When I2CS2 received this matched address, a DBG interrupt is generated. This is described in the Debug and ISP sections. If DBGSI2C2EN=0, then I2CS2 functions as a regular I²C slave. The address of the slave is set by I2CSADR2 register. The MSB in I2CSADR2 is the enable bit for the I²C slave controller and I2CSADR2[6-0] specifies the actual slave address.

In receive mode, the controller detects a valid matched address and issues an ADDRMI interrupt. At the same time, the data bit on SDA line is shifted into the receive buffer. The RCBI interrupt is generated whenever a complete byte is received and is ready to be read from I2CSDAT2. If the software does not respond to RCBI interrupt in time (i.e., RCBI is not cleared) for any reason, and a new byte is received, the controller either forces a NACK response on I²C (if CLKSTREN bit is not set) or by pulling and holding SDA low (if CLKSTREN bit is set) to stretch the SCL low duration to force the master into a wait state. In clock stretching mode, SCL is released when the software responds to RCBI interrupt and clears RCBI flag.

In transmit mode, the controller detects a valid matched address and issues an ADDRMI interrupt. At the same time, the data preloaded in the transmit data register through I2CSDAT2 is transferred to the transmit shift register and is serially shifted out onto the SDA line. When this occurs, the controller generates a TXBI interrupt to inform the software that a new byte can be written into I2CSDAT2. When the shift register is empty and ready for the next transmit, the slave controller checks if the new byte is written to the I2CSDAT2. If TXBI is not cleared, it indicates a lack of new data and the slave controller holds the SCL line low to stretch the current clock cycle if CLKSTREN is set. If the clock stretching is not enabled, the slave controller takes the old byte into the shift register and replies with NACK, thus causing data corruption. On the other hand, if the master returns the NACK after the byte transfer, this indicates the end of data to the I²C slave. In this case, the I²C slave releases the data line to allow the master to generate a STOP or REPEAT START.

The I²C slave controller also implements the input noise spike filter, and this is enabled by INFILEN bit in the I2CSCON2 register. The filter is implemented using a digital circuit. When INFILEN is set, the spikes less than 1/2 SYSCLK period on the input of SDA and SCL lines are filtered out. If INFILEN is low, no input filtering is done. The following registers are related to I²C Slave Controller. I²C slave controller also uses SYSCLK to sample the SCL and SDA signals, and therefore the maximum allowable I²C bus speed is limited to SYSCLK/8 with conforming data setup and hold time. If setup and hold time cannot be guaranteed, then it is recommended the bus speed is limited to 1/40 SYSCLK.

I2CSCON2 (0xDB) I2CS2 Configuration Register R/W (0x00)

	7	6	5	4	3	2	1	0
RD	-	-	-	START	-	-	-	XMT
WR	I2CSRST	EADDRMI	ESTOPI	ERPSTARTI	ETXBI	ERCBI	CLKSTREN	INFILEN

I2CSRST — I²C Slave Reset bit
Setting this bit causes the Slave Controller to reset all internal state machines. Clear this bit for normal operations. Setting this bit clears the I2CSADR2 (I²C slave address x).

EADDRMI — ADDRMI Interrupt Enable bit
Set this bit to set ADDRMI interrupt as the I²C slave interrupt. This interrupt is generated when I²C slave receives a matched address.

ESTOPI — STOPI Interrupt Enable bit
Set this bit to set STOPI interrupt as the I²C slave interrupt.

ERPSTARTI — RPTSTARTI Interrupt Enable Bit
Set this bit to set RPTSTARTI interrupt as the I²C slave interrupt.

ETXBI — TXBI Interrupt Enable bit. Set this bit to allow TXBI interrupt as the I²C slave interrupt.

ERCBI — RCBI Interrupt Enable bit. Set this bit to allow RCBI interrupt as the I²C slave interrupt.

CLKSTREN — Clock Stretching Enable bit. Set to enable the clock stretching function of the slave controller. Clock stretching is an optional feature defined in the I²C specification.
If the clock stretching option is enabled (for slave I²C), the data written into transmit buffer is shifted out only after the occurrence of clock stretching, and the data cannot

be loaded to transmit shift register. The programmer must write the same data again to the transmit buffer.

INFILEN — Input Noise Filter Enable bit
Set this bit to enable the input noise filter of SDA and SCL lines. When the filter is enabled, it filters out the spike of less than 50nsec.

XMT — This bit is set by the controller when the I²C slave is in transmit operation. It is cleared when the I²C slave controller is in receive operation.

I2CSST2 (0xDC) I2CS2 Status Register R/W (0x00)

	7	6	5	4	3	2	1	0
RD	FIRSTBT	ADDRMI	STOPI	RPSTARTI	TXBI	RCBI	START	NACK
WR	DADDR	ADDRMI	STOPI	RPSTARTI	HOLDT[3]	HOLDT[2]	HOLDT[1]	HOLDT[0]

FIRSTBT — This bit is set to indicate the data in the data register as the first byte received after the address match. This bit is cleared after the first byte of the transaction is read. The bit is read-only and generated by the slave controller.

DADDR — Double Address Enable
If DADDR=1, the LSB bit of the address register is ignored. This allows receiving two consecutive slave addresses, for example, 0x1010000 and 0x1010001.

ADDRMI — Slave Address Match Interrupt Flag bit
This bit is set when the received address matches the address defined in I2CSADR2. If ADDRMI is set, this generates an interrupt. This bit must be cleared by software.

STOPI — Stop Condition Interrupt Flag bit
This bit is set when the slave controller detects a STOP condition on the SCL and SDA lines. This bit must be cleared by software.

RPTSARTI — Repeat Start Condition Interrupt Flag bit
This bit is set when the slave controller detects a REPEAT START condition on the SCL and SDA lines. This bit must be cleared by software.

TXBI — Transmit Buffer Interrupt Flag
This bit is set when the slave controller is ready to accept a new byte for transmission. This bit is cleared when new data is written into I2CSDAT2 register.

RCBI — Receiver Buffer Interrupt Flag bit
This bit is set when the slave controller puts new data in the I2CSDAT2 and is ready for software reading. This bit is cleared after the software reads I2CSDAT2.

START — Start Condition
This bit is set when the slave controller detects a START condition on the SCL and SDA lines. This bit is not very useful as the start of the transaction can be indicated by the address match interrupt. This read-only bit is cleared when STOP condition is detected.

NACK — NACK Condition
This bit is set when the host responds with NACK in the byte transaction. This bit is only meaningful for slave-transmit operations. Please note: If the master returns with NACK on the byte transaction, the slave does not upload new data into the shift register. And the slave transmits the old data again as the next transfer, and this re-transmission continues if NACK is repeated until the transmission is successful and returned with ACK. This bit is cleared when a new ACK is detected or it can be cleared by software.

HOLDT[3-0] — These four bits define the hold time in SYSCLK cycles between SDA to SCL. The I²C specification requires for minimum of 300nsec hold time, so the condition of "SYSCLK cycle*(HOLDT[3:0]+3) ≧ 300nsec hold time" equation must be met. For example, SYSCLK is 20MHz, then HOLD[3-0] should be set ≧3.

I2CSADR2 (0xDD) I2CS2 Slave Address 1 Register R/W (0x00)

	7	6	5	4	3	2	1	0
RD	XMT	I2CADDR[6-0]						
WR	I2CSEN	SADDR2[6-0]						

XMT — This bit is set by the hardware when I²C slave is in transmit operation. It is 0 when the I²C slave is in receiving operation.

I2CSEN	Set this bit to enable the I²C slave controller.
SADDR2[6-0]	7-bit Slave Address When written, SADDR2[6-0] stores the slave address of the slave.
I2CADDR[6-0]	When read, I2CADDR[6-0] holds the slave address of the received slave address. Software can use this to determine the address if the double address is enabled.

I2CSDAT2 (0xDE) I2CS2 Data Register R/W (0x00)

	7	6	5	4	3	2	1	0
RD	I²C Slave Receive Data Register							
WR	I²C Slave Transmit Data Register							

I2CSADR2A (0xDF) I2CS2 Slave Address 2 Register R/W (0x00)

	7	6	5	4	3	2	1	0
RD	I2CS2AEN	-						
WR	I2CS2AEN	SADDR2A[6-0]						

I2CS2AEN	Set this bit to enable the I²C slave SADDR2A match.
SADDR2A[6-0]	7-bit Slave Address When written, SADDR2A[6-0] stores the 2nd slave address of the slave.

12. EUART1 with Enhanced Function of UART1

LIN-capable 16550-like EUART1 is an enhanced UART controller (EUART) with separate transmit and receive FIFO. Both transmit and receive FIFO are 15-bytes deep and can be parameterized for interrupt triggering. The addition of FIFO significantly reduces the CPU load to handle the high-speed serial interface. Transmit FIFO and receive FIFO have respective interrupt trigger levels that can be set based on optimal CPU performance. The EUART1 also has a dedicated 16-bit Baud Rate generator and thus provides an accurate baud rate under a wide range of system clock frequencies

SCON1 (0xB1) EUART1 Configuration Register R/W (0x00)

	7	6	5	4	3	2	1	0
RD	EUARTEN	SB	WLS[1]	WLS[0]	BREAK	OP	PERR	SP
WR	EUARTEN	SB	WLS[1]	WLS[0]	BREAK	OP	PE	SP

EUARTEN — Transmit and Receive Enable bit
Set to enable EUART2 transmit and receive functions: Transmit messages in the TX FIFO and store received messages in the RX FIFO.

SB — Stop Bit Control
Set to enable 2 Stop bits, and clear to enable 1 Stop bit.

WLS[1-0] — The number of bits of a data byte. This does not include the parity bit when parity is enabled.
00 - 5 bits
01 - 6 bits
10 - 7 bits
11 - 8 bits

BREAK — Start Sending BREAK and followed by SYNC byte.
Set to initiate a break condition on the UART interface by holding UART output at low for the duration of BRKLEN, and then followed by a SYNC byte (if BRKSYNC=1).
When read, 1 indicates it is still ongoing. It is self-cleared by hardware when completed.
At completion, it also generates a EUART1 interrupt.
Software can start putting data into TX FIFO. The data will start transmission after the SYNC byte is transmitted.

OP — Odd/Even Parity Control Bit

PE/PERR — Parity Enable / Parity Error status
Set to enable parity and clear to disable parity checking functions. If read, PERR=1 indicates a parity error in the current data of RX FIFO.

SP — Parity Set Control Bit
When SP is set, the parity bit is always transmitted as 1.

SCON1X (0xB2) EUART1 Configuration Register R/W (0x00)

	7	6	5	4	3	2	1	0
RD	RXST	BERR	BECLRX	BECLRR	LBKEN	BERIE	-	TXPOL
WR	-	BERR	BECLRX	BECLRR	LBKEN	BERIE	CLRFIFO	TXPOL

RXST — Receive Status
RXST is controlled by hardware. RXST is set by hardware when a START bit is detected. It is cleared when the STOP condition is detected.

BITERR — Bit Error Flag
BITERR is set by hardware when the received bit does not match with transmit bit, if BERIE=1, and then this error generates an interrupt. BITERR must be cleared by software.

BECLRX — Bit Error Force Clear Transmit Enable
If BECLRX=1, hardware immediately disables current transmission and clears TX state machines and FIFO when BITERR is set by hardware.

BECLRR — Bit Error Force Clear RECEIVE Enable
If BECLRX=1, hardware immediately disables current reception and clears RX state machines and FIFO when BITERR is set by hardware.

LBKEN — Enable EUART Loopback Test

When LBKEN=1, EUART1 enters into loopback mode, with its TX output connected to RX input. When in loopback mode, the corresponding MFCFG bit must be cleared to prevent the TX pin output.

BERIE — Bit Error Interrupt Enable (1:Enable / 0:Disable)

CLRFIFO — Set to clear transmit/receive FIFO pointer and state machine. CLRFIFO bit is auto-cleared by hardware.

TXPOL — EUART output polarity

SFIFO1 (0xB3) EUART1 FIFO Status/Control Register R/W (0x00)

	7	6	5	4	3	2	1	0
RD	RFL[3-0]				TFL[3-0]			
WR	RFLT[3-0]				TFLT[3-0]			

RFL[3-0] — Current Receive FIFO level. This is read-only and indicates the current receive FIFO byte count.

RFLT[3-0] — Receive FIFO trigger threshold. This is write-only. RDA interrupt will be generated when RFL[3-0] is greater than RFLT[3-0].

RFLT[3-0]	Description
0000	RX FIFO trigger level = 0
0001	RX FIFO trigger level = 1
0010	RX FIFO trigger level = 2
0011	RX FIFO trigger level = 3
0100	RX FIFO trigger level = 4
0101	RX FIFO trigger level = 5
0110	RX FIFO trigger level = 6
0111	RX FIFO trigger level = 7
1000	RX FIFO trigger level = 8
1001	RX FIFO trigger level = 9
1010	RX FIFO trigger level = 10
1011	RX FIFO trigger level = 11
1100	RX FIFO trigger level = 12
1101	RX FIFO trigger level = 13
1110	RX FIFO trigger level = 14
1111	Reset Receive State Machine and Clear RX FIFO

TFL[3-0] — Current Transmit FIFO level. This is read-only and indicates the current transmit FIFO byte count.

TFLT[3-0] — Transmit FIFO trigger threshold. This is write-only. TRA interrupt will be generated when TFL[3-0] is less than TFLT[3-0].

TFLT[3-0]	Description
0000	Reset Transmit State Machine and Clear TX FIFO
0001	TX FIFO trigger level = 1
0010	TX FIFO trigger level = 2
0011	TX FIFO trigger level = 3
0100	TX FIFO trigger level = 4
0101	TX FIFO trigger level = 5
0110	TX FIFO trigger level = 6
0111	TX FIFO trigger level = 7
1000	TX FIFO trigger level = 8

TFLT[3-0]	Description
1001	TX FIFO trigger level = 9
1010	TX FIFO trigger level = 10
1011	TX FIFO trigger level = 11
1100	TX FIFO trigger level = 12
1101	TX FIFO trigger level = 13
1110	TX FIFO trigger level = 14
1111	TX FIFO trigger level = 15

SINT1 (0xB4) EUART1 Interrupt Status/Enable Register R/W (0x00)

	7	6	5	4	3	2	1	0
RD	INTEN	TRA	RDA	RFO	RFU	TFO	FERR	TI
WR	INTEN	TRAEN	RDAEN	RFOEN	RFUEN	TFOEN	FERREN	TIEN

INTEN — Interrupt Enable bit. Write only
Set to enable EUART1 interrupt. Clear to disable interrupt. The default is 0.

TRA/TRAEN — Transmit FIFO is ready to be filled.
This bit is set when transmit FIFO has been emptied below the FIFO threshold. Write "1" to enable interrupt. The flag is automatically cleared when the condition is absent.

RDA/RDAEN — Receive FIFO is ready to be read.
This bit is set by hardware when received FIFO exceeds the FIFO threshold. Write "1" to enable interrupt. RDA will also be set when RFL < RFLT for bus idle duration longer than RFLT * 16 * Baud Rate. This is to inform the software that there are still remaining unread received bytes in the FIFO.
The flag is cleared when RFL < RFLT and writing "0" to the bit (the interrupts is disabled simultaneously)

RFO/RFOEN — Receive FIFO Overflow Enable bit
This bit is set when the overflow condition of receive FIFO occurs. Write "1" to enable interrupt. The flag can be cleared by writing "0" to the bit (The interrupt is disabled simultaneously.), or by FIFO reset action.

RFU/RFUEN — Receive FIFO Underflow Enable bit
This bit is set when the underflow condition of receive FIFO occurs. Write "1" to enable interrupt. The flag can be cleared by writing "0" to the bit (The interrupt is disabled simultaneously.), or by FIFO reset action.

TFO/TFOEN — Transmit FIFO Overflow Interrupt Enable bit
This bit is set when the overflow condition of transmit FIFO occurs. Write "1" to enable interrupt. The flag can be cleared by writing "0" to the bit (The interrupt is disabled simultaneously.), or by FIFO reset action.

FERR/FERREN — Framing Error Enable bit
This bit is set when a framing error occurs as the byte is received. Write "1" to enable interrupt. The flag must be cleared by writing "0" to the bit (The interrupt is disabled simultaneously.).

TI/TIEN — Transmit Message Completion Interrupt Enable bit
This bit is set when all messages in the TX FIFO are transmitted and thus the TX FIFO becomes empty. Write "1" to enable interrupt. The flag must be cleared by writing "0" to the bit (The interrupt is disabled simultaneously.).

SBUF1 (0xB5) EUART1 Data Buffer Register R/W (0x00)

	7	6	5	4	3	2	1	0
RD	EUART1 Receive Data Register							
WR	EUART1 Transmit Data Register							

This register is the virtual data buffer register for both receiving and transmitting FIFO. When being read, it reads out the top byte of the RX FIFO; when being written, it writes into the top byte of the TX FIFO.

SBR1L (0xB6) EUART1 Baud Rate Register Low byte R/W (0x00)

	7	6	5	4	3	2	1	0
RD	SBR1[7:0]							
WR	SBR1[7-0]							

SBR1H (0xB7) EUART1 Baud Rate Register High byte R/W (0x00)

	7	6	5	4	3	2	1	0
RD	SBR1[15-8]							
WR	SBR1[15-8]							

SBR1[15-0] The Baud Rate Setting of EUART.
BUAD RATE = SYSCLK/(SBR1[15-0]+1).

SBRK1 (0xC1) EUART1 Break Configuration Register R/W (0x00)

	7	6	5	4	3	2	1	0
RD	BRKIEN	-	RCVSPL[1-0]		BRKF	BRKSYNC	BRKLEN[1-0]	
WR	BRKIEN	-	RCVSPL[1-0]		BRKF	BRKSYNC	BRKLEN[1-0]	

BRKIEN BREAK Completion Interrupt Enable
BRKIEN=1 enables EUART1 interrupt when BRK/SYNC transmission is completed

RCVSPL[1-0] Adjust Receive Sampling Point
00 = 50%
01 = 62.5%
10 = 69%
11 = 75%

BRKF BREAK Completion Flag
BRKF is set by hardware when BRK/SYNC transmission completes. It must be cleared by software.

BRKSYNC Send SYNC after Break
If BRKSYNC=0, only the Break field is sent.
If BRKSYNC=1, a SYNC byte is also sent after the Break field.

BRKLEN[1-0] BREAK Length Setting
00 = 13 BT
01 = 14 BT
10 = 15 BT
11 = 16 BT

13. EUART2 with LIN Controller

LIN-capable 16550-like EUART2 is an enhanced UART controller (EUART) with separate transmit and receive FIFO. Both transmit and receive FIFO is 15 bytes deep and can be parameterized for interrupt triggering. The addition of FIFO significantly reduces the CPU load to handle a high-speed serial interface. Transmit FIFO and receive FIFO have respective interrupt trigger levels that can be set based on optimal CPU performance. The EUART2 has a dedicated 16-bit Baud Rate generator and thus provides an accurate baud rate under a wide range of system clock frequencies. The EUART2 also provides LIN extensions that incorporate message handling and baud-rate synchronization. The block diagram of EUART2 is shown in the following.

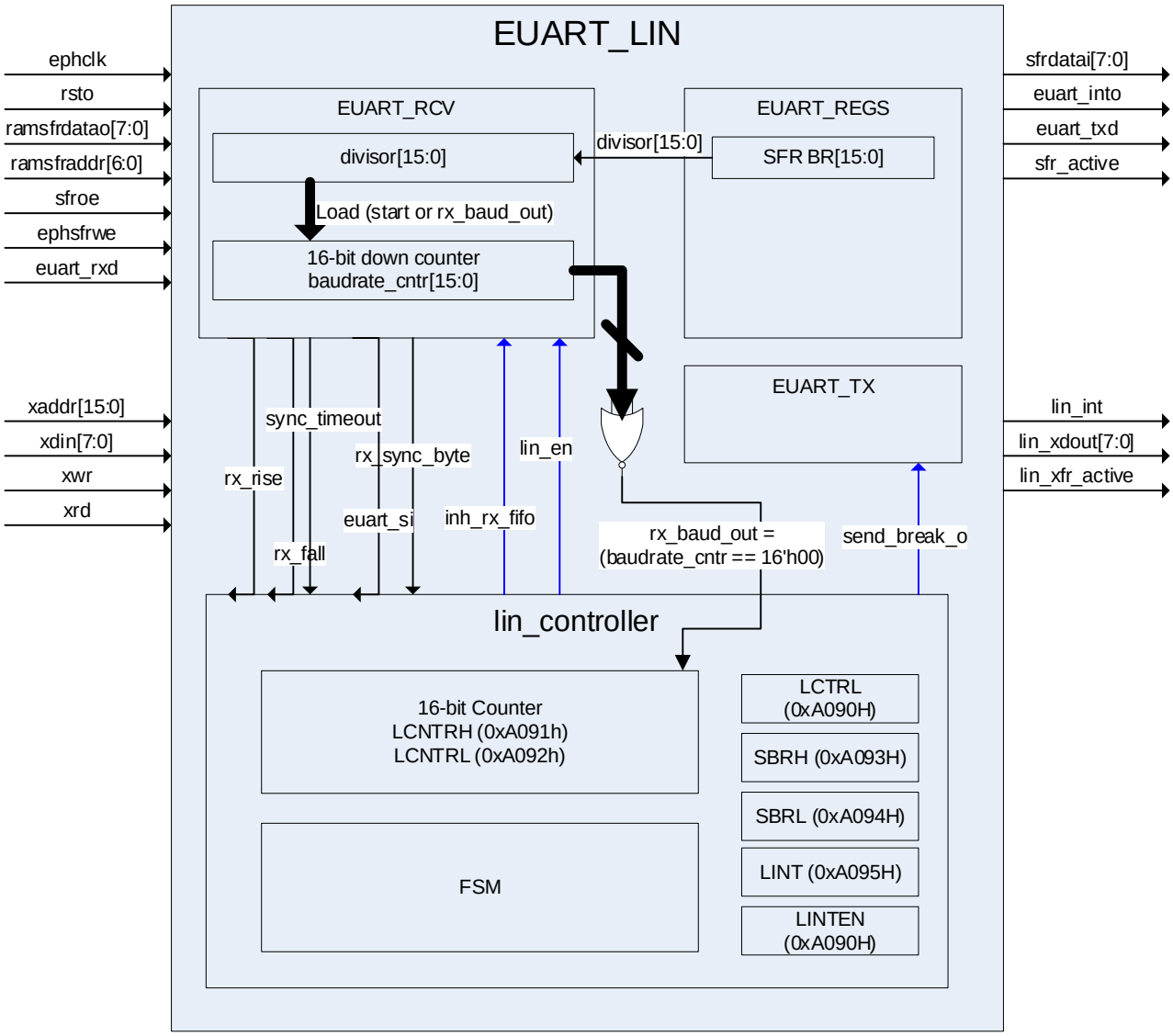

Figure 13-1 EUART2 with LIN Controller block diagram

The following registers are used for configurations of EUART2.

SCON2 (0xC2) UART2 Configuration Register R/W (0x00)

	7	6	5	4	3	2	1	0
RD	EUARTEN	SB	WLS[1]	WLS[0]	BREAK	OP	PERR	SP
WR	EUARTEN	SB	WLS[1]	WLS[0]	BREAK	OP	PE	SP

EUARTEN	Transmit and Receive Enable bit Set to enable EUART2 transmit and receive functions: Transmit messages in the TX FIFO and store received messages in the RX FIFO.
SB	Stop Bit Control Set to enable 2 Stop bits, and clear to enable 1 Stop bit.
WLS[1-0]	The number of bits of a data byte. This does not include the parity bit when parity is enabled.

00 - 5 bits
01 - 6 bits
10 - 7 bits
11 - 8 bits

BREAK — Break Condition Control Bit
Set to initiate a break condition on the UART interface by holding UART output at low until BREAK bit is cleared.

OP — Odd/Even Parity Control Bit

PE/PERR — Parity Enable / Parity Error status
Set to enable parity and clear to disable parity checking functions. If read, PERR=1 indicates a parity error in the current data of RX FIFO.

SP — Parity Set Control Bit
When SP is set, the parity bit is always transmitted as 1.

SFIFO2 (0xA5) UART2 FIFO Status/Control Register R/W (0x00)

	7	6	5	4	3	2	1	0
RD	RFL[3-0]				TFL[3-0]			
WR	RFLT[3-0]				TFLT[3-0]			

RFL[3-0] — Current Receive FIFO level. This is read only and indicates the current receive FIFO byte count.

RFLT[3-0] — Receive FIFO trigger threshold. This is write-only. RDA interrupt will be generated when RFL[3-0] is greater than RFLT[3-0].

RFLT[3-0]	Description
0000	RX FIFO trigger level = 0
0001	RX FIFO trigger level = 1
0010	RX FIFO trigger level = 2
0011	RX FIFO trigger level = 3
0100	RX FIFO trigger level = 4
0101	RX FIFO trigger level = 5
0110	RX FIFO trigger level = 6
0111	RX FIFO trigger level = 7
1000	RX FIFO trigger level = 8
1001	RX FIFO trigger level = 9
1010	RX FIFO trigger level = 10
1011	RX FIFO trigger level = 11
1100	RX FIFO trigger level = 12
1101	RX FIFO trigger level = 13
1110	RX FIFO trigger level = 14
1111	Reset Receive State Machine and Clear RX FIFO

TFL[3-0] — Current Transmit FIFO level. This is read-only and indicates the current transmit FIFO byte count.

TFLT[3-0] — Transmit FIFO trigger threshold. This is write-only. TRA interrupt will be generated when TFL[3-0] is less than TFLT[3-0].

TFLT[3-0]	Description
0000	Reset Transmit State Machine and Clear TX FIFO
0001	TX FIFO trigger level = 1
0010	TX FIFO trigger level = 2
0011	TX FIFO trigger level = 3
0100	TX FIFO trigger level = 4

TFLT[3-0]	Description
0101	TX FIFO trigger level = 5
0110	TX FIFO trigger level = 6
0111	TX FIFO trigger level = 7
1000	TX FIFO trigger level = 8
1001	TX FIFO trigger level = 9
1010	TX FIFO trigger level = 10
1011	TX FIFO trigger level = 11
1100	TX FIFO trigger level = 12
1101	TX FIFO trigger level = 13
1110	TX FIFO trigger level = 14
1111	TX FIFO trigger level = 15

Receive and transmit FIFO can be reset by clear FIFO operation. This is done by setting BR[15-0]=0 and EUARTEN=0. This also clears RFO, RFU, and TFO interrupt flags without writing the interrupt register. The LIN counter LCNTR is also cleared.

SINT2 (0xA7) UART2 Interrupt Status/Enable Register R/W (0x00)

	7	6	5	4	3	2	1	0
RD	INTEN	TRA	RDA	RFO	RFU	TFO	FERR	TI
WR	INTEN	TRAEN	RDAEN	RFOEN	RFUEN	TFOEN	FERREN	TIEN

INTEN — Interrupt Enable bit. Write only
Set to enable UART2 interrupt. Clear to disable interrupt. Default is 0.

TRA/TRAEN — Transmit FIFO is ready to be filled.
This bit is set when transmit FIFO has been emptied below the FIFO threshold. Write “1” to enable interrupt. The flag is automatically cleared when the condition is absent.

RDA/RDAEN — Receive FIFO is ready to be read.
This bit is set by hardware when received FIFO exceeds the FIFO threshold. Write “1” to enable interrupt. RDA will also be set when RFL < RFLT for bus idle duration longer than RFLT * 16 * Baud Rate. This is to inform the software that there are still remaining unread received bytes in the FIFO.
The flag is cleared when RFL < RFLT and writing “0” to the bit (The interrupt is disabled simultaneously.)

RFO/RFOEN — Receive FIFO Overflow Enable bit
This bit is set when the overflow condition of receive FIFO occurs. Write “1” to enable interrupt. The flag can be cleared by writing “0” to the bit (The interrupt is disabled simultaneously.), or by FIFO reset action.

RFU/RFUEN — Receive FIFO Underflow Enable bit
This bit is set when the underflow condition of receive FIFO occurs. Write “1” to enable interrupt. The flag can be cleared by writing “0” to the bit (The interrupt is disabled simultaneously.), or by FIFO reset action.

TFO/TFOEN — Transmit FIFO Overflow Interrupt Enable bit
This bit is set when the overflow condition of transmit FIFO occurs. Write “1” to enable interrupt. The flag can be cleared by writing “0” to the bit (The interrupt is disabled simultaneously.), or by FIFO reset action.

FERR/FERREN — Framing Error Enable bit
This bit is set when a framing error occurs as the byte is received. Write “1” to enable interrupt. The flag must be cleared by writing “0” to the bit (The interrupt is disabled simultaneously.).

TI/TIEN — Transmit Message Completion Interrupt Enable bit
This bit is set when all messages in the TX FIFO are transmitted and thus the TX FIFO becomes empty. Write “1” to enable interrupt. The flag must be cleared by writing “0” to the bit (The interrupt is disabled simultaneously.).

SBUF2 (0xA6) UART2 Data Buffer Register R/W (0x00)

	7	6	5	4	3	2	1	0
RD	EUART2 Receive Data Register							
WR	EUART2 Transmit Data Register							

This register is the virtual data buffer register for both receive and transmit FIFO. When being read, it reads out the top byte of the RX FIFO; when being written, it writes into the top byte of the TX FIFO.

EUART2 can be configured to add LIN capability. The major enhancement of LIN includes master/slave configurations, auto baud-rate synchronization, and frame-based protocol with a header. Under LIN extension mode, all EUART2 registers and functions are still effective and operational. LIN is a single-wire bus and it requires external components to combine RX and TX signals externally. LIN is frame-based and consists of message protocols with master/slave configurations. The following diagram shows the basic composition of a header message sent by the master. It starts with BREAK, the SYNC byte, ID bytes, DATA bytes, and CRC bytes.

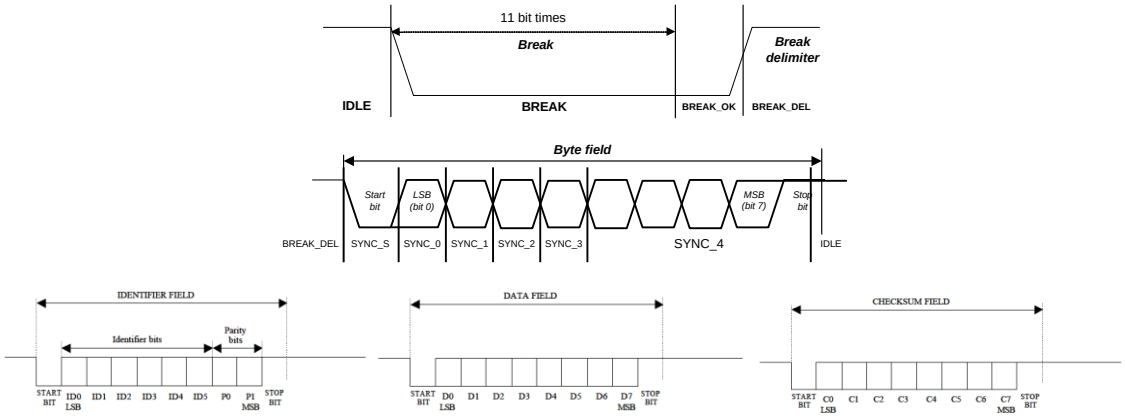

Figure 13-2 LIN frame structure

A LIN frame structure is shown and the frame time matches the number of bits sent and has a fixed timing.

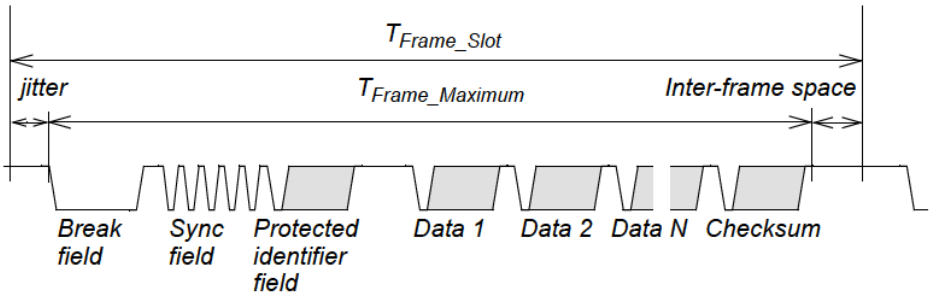

Figure 13-3 LIN frame timing

LIN bus protocol is based on frame. Each frame is partitioned into several parts as shown above. For the LIN master to initiate a frame, the software follows the following procedures:

Initiate a SBK command. (SW needs to check if the bus is in an idle state, and if there is no pending transmit data).

Write “55” into TFIFO.

Write “PID” into TFIFO.

Wait for SBK to complete interrupts and then write the following transmit data if applicable. (This is optional.)

The following diagram shows the Finite State Machine (FSM) of the LIN extension and is followed by registers within EUART2.

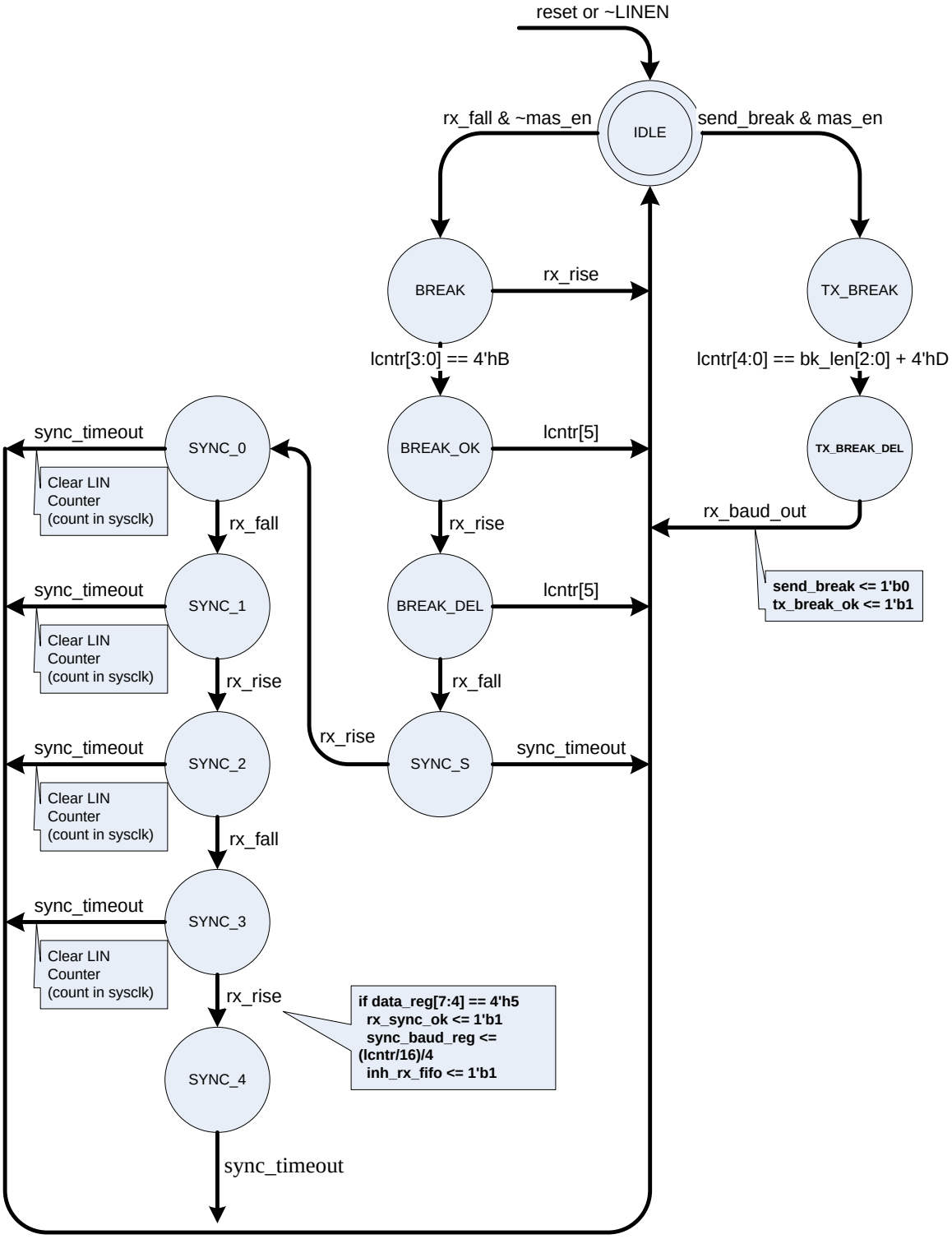

Figure 13-4 Finite State Machine of the LIN extension

LINCTRL (0xA090) LIN Status/Control Register R/W (0x00)

	7	6	5	4	3	2	1	0
RD	LINEN	MASEN	ASU	MASU	SBK	BL[2:0]		
WR	LINEN	MASEN	ASU	MASU	SBK	BL[2:0]		

LINEN — LIN Enable (1: Enable / 0: Disable)
LIN header detection / transmission is functional when LINEN = 1.
※ Before enabling LIN functions, the EUART2 registers must be set correctly：0xB0 is recommended for SCON2.

MASEN	Master Enable bit (1: Master / 0: Slave) LIN operating mode selection. This bit is changeable only when LINEN = 0 (must clear LINEN before changing MASEN).
ASU	Auto-Sync Update Enable (1: Enable / 0: Disable), Write Only If ASU is 1, the LIN controller will automatically overwrite BR[15-0] with SBR[15-0] and issue an ASUI interrupt when receiving a valid SYNC field. If ASU is 0, the LIN controller will only notice the synchronized baud rate in SBR[15-0] by issuing an RSI interrupt. ASU should not be set under UART mode. ASU capability is based on the message containing the BREAK and SYNC fields in the beginning. When ASU=1, the auto-sync update is performed on every receiving frame, and is updated frame by frame. When ASU is set to 1, LININTEN[SYNCMD] should also be set to 1.
MASU	Message Auto Sync Update Enable MASU is meaningful only if ASU=0. MASU=1 will enable the auto-sync update on the next received frame only. It is self-cleared when the sync update is completed. The software must set MASU again if another auto-sync operation is desired. When MASU is set to 1, LININTEN[SYNCMD] should also be set to 1.
SBK	If MASEN=1, Send Break (1: Send / 0: No send request) LINEN and MASEN should be set before setting SBK. When LINEN and MASEN are both 1, set SBK to send a bit sequence of 13+BL[2:0] consecutive dominant bits and 1 recessive bit (Break Delimiter). Once SBK is set, this bit represents the “Send Break” status and CANNOT be cleared by writing to “0”; instead, clearing LINEN cancels the “Send Break” action. In normal cases, SBK is cleared automatically when the transmission of Break Delimiter is completed.
BL[2:0]	Break Length Setting Break Length = 13 + BL[2:0]. Default BL[2:0] is 3’b000.

LINCNTRH (0xA091) LIN Timer Register High R/W (0xFF)

	7	6	5	4	3	2	1	0
RD	LCNTR15-8]							
WR	LINTMR[15-8]							

LINCNTRL (0xA092) LIN Time Register Low R/W (0xFF)

	7	6	5	4	3	2	1	0
RD	LCNTR[7-0]							
WR	LINTMR[7-0]							

LCNTR[15-0] is read-only and is an internal 16-bit counter clocked by the baud rate clock. LINTMR[15-0] is write-only and is the timer limit for LCNTR[15-0]. If MASEN=1 as LIN master mode, this timer is used to generate the Frame time base. The internal counter LCNTR[15-0] is cleared whenever a “SEND BREAK” command is executed, and when the counter reaches LINTMR [15-0] (LCNTR[15-0] >= LINTMR[15-0]), an LCNTRO interrupt is generated. Hence the software can write a Frame Time value into LINTMR and use interrupts to initiate frames. If MASEN=0 as LIN slave mode, this timer is used for determining the accumulated bus idle time. The internal counter is cleared whenever an RX transition occurs. When the internal counter reaches LINTMR[15-0],an LCNTRO interrupt is generated. The software can use this interrupt to enter sleep mode by writing the required bus idling time into LINTMR[15-0].

LINSBRH (0xA093) EUART/LIN Baud Rate Register High byte R/W (0x00)

	7	6	5	4	3	2	1	0
RD	SBR[15-8]							
WR	BR[15-8]							

LINSBRL (0xA094) EUART/LIN Baud Rate Register Low byte R/W (0x00)

	7	6	5	4	3	2	1	0
RD	SBR[7:0]							
WR	BR[7-0]							

SBR[15-0]	The acquired Baud Rate under LIN protocol. This is read-only.

SBR[15-0] is the acquired baud rate setting from the last received valid sync byte. SBR is meaningful only in LIN-Slave mode.

BR[15-0] The Baud Rate Setting of EUART/LIN. This is write-only.
BUAD RATE = SYSCLK/(BR[15-0]+1).

When a slave receives a BREAK followed by a valid SYNC field, an RSI interrupt is generated and the acquired baud rate from the SYNC field is stored in SBR[15-0]. The acquired baud rate: BAUD RATE = SYSCLK/(SBR[15-0]+1). The software can just update this acquired value SBR[15-0] into BR[15-0] to achieve synchronization with the master. If Auto-Sync Update (ASU) register bit is enabled under LIN slave mode, LIN controller will automatically perform the update of BR[15-0] with SBR[15-0] and issue another ASUI interrupt when a valid SYNC field is received.

LININT (0xA095) LIN Interrupt Flag Register R/W (0x00)

	7	6	5	4	3	2	1	0
RD	RXST	BITERR	LSTAT	LIDLE	ASUI	SBKI	RSI	LCNTRO
WR	LBKEN	BITERR	BECLRX	BECLRR	ASUI	SBKI	RSI	LCNTRO

RXST Receive Status
RXST is set by hardware when a START bit is detected. It is cleared when the STOP condition is detected.

LBKEN Enable EUART Loopback Test
When LBKEN=1, EUART2 enters into loopback mode, with its TX output connected to RX input. When in loopback mode, to prevent the TX pin output, the corresponding MFCFG bit must be cleared.

LBKEN Loopback Enable

BITERR Bit Error Flag
BITERR is set by hardware when the received bit does not match with the transmitted bit. If BERIE=1, this mismatch error generates an interrupt. BITERR must be cleared by software.

BECLRX Bit Error Force Clear Transmit Enable
If BECLRX=1, hardware immediately disables current transmission and clears TX state machines and FIFO when BITERR is set by hardware.

BECLRR Bit Error Force Clear Receive Enable
If BECLRX=1, hardware immediately disables current reception and clears RX state machines and FIFO when BITERR is set by hardware.

LSTAT LIN Bus Status bit (1: Recessive / 0: Dominant), Read-only.
LSTAT = 1 indicates that the LIN bus (RX pin) is in a recessive state.

LIDLE LIDLE is 1 when the LIN bus is idle and not transmitting/receiving the LIN header or data bytes. This bit is read-only. It is 1 when LINEN = 0.

ASUI Auto-Sync Updated completion Interrupt (1: Set / 0: Clear)
This flag is set when auto baud rate synchronization has been completed and BR[15-0] has been updated with SBR[15-0] by hardware. It must be cleared by writing “1” to the bit.

SBKI If MASEN=1, Send Break Completion Interrupt bit (1: Set / 0: Clear).
This flag is set when Send Break completes. It must be cleared by writing “1” to the bit.
If MASEN=0, Receive Break Completion Interrupt bit
This flag is set when a Break condition is detected and completed by a rising edge of the bus signal. It must be cleared by writing “1” to the bit.

RSI Receive Sync Completion Interrupt bit (1: Set / 0: Clear)
This flag is set when a valid Sync byte is received following a Break. It must be cleared by writing “1” to the bit.

LCNTRO LIN Counter Overflow Interrupt bit (1: Set / 0: Clear).
This flag is set when the LIN counter reaches 0xFFFF. It must be cleared by writing “1” to the bit.

LININTEN (0xA096) LIN Interrupt Enable Register R/W (0x00)

	7	6	5	4	3	2	1	0
RD	LINTEN	BERIE	SYNCMD	SYNCVD	ASUIE	SBKIE	RSIE	LCNTRIE
WR	LINTEN	BERIE	SYNCMD	EUARTOPL	ASUIE	SBKIE	RSIE	LCNTRIE

LINTEN	LIN Interrupt Enable (1: Enable / 0: Disable) Set to enable all LIN interrupts. LINT flags should be checked before setting or modifying.
BERIE	Bit Error Interrupt Enable (1: Enable / 0: Disable)
SYNCMD	Synchronization Mode Selection SYNCMD=0 will only allow automatic synchronization of the baud rate within +/- 6% deviations from the current baud rate setting. A larger than +/- 6% deviation may cause an error of reception. SYNCMD=1 will automatically synchronize and update the baud rate register with the newly acquired baud rate. SYNCMD should be set to 1 when either ASU or MASU is 1. Although under this setting, the tolerant range of deviation can be up to +/- 50%, it is recommended to set the LINBR[15-0] as close as the target baud rate. The new baud rate can be successfully synchronized and frames are received correctly. And following conditions must be met at the same time. 1. Within +/- 50% of the current baud rate setting. 2. The incoming Break Length satisfies the following two conditions at the same time: A. Break length is less than 32 current baud rate bit times B. Break length is less than 253952 system clock 3. For the application with multi-baud rates, software should set the LINBR[15-0] using the lowest value. Since after each LIN transaction, LINBR[15-0] is automatically updated with a newly synchronized value, software needs to reset LINBR[15-0] to the lowest baud rate again if a new baud rate is used.
SYNCVD	Synchronization Valid Status SYNCVD is updated by the hardware when SYNCMD=1. SYNCVD is set to 1 if the auto-synchronization is successful.
EUARTOPL	EUART/LIN output polarity EUARTOPL=1 will reverse the transmit output polarity.
ASUIE	Auto-Sync Update Interrupt Enable (1: Enable / 0: Disable)
SBKIE	If MASEN=1, Send Break Completion Interrupt Enable. If MASEN=0, Receive Break Completion Interrupt Enable.
RSIE	Receive Sync Completion Interrupt Enable (1: Enable / 0: Disable)
LCNTRIE	LIN Counter Overflow Interrupt Enable (1: Enable / 0: Disable)

LINTCON (0xA0B0) LIN Timeout Configuration Register R/W (0x00)

	7	6	5	4	3	2	1	0
RD	RXDTO[0]	LINRXFEN	RXTOWKE	TXTOWKE	RXDD_F	TXDD_F	RXDDEN	TXDDEN
WR	RXDTO[0]	LINRXFEN	RXTOWKE	TXTOWKE	RXDD_F	TXDD_F	RXDDEN	TXDDEN

RXDTO[0]	RXD Dominant Timeout Timer[0] Combine with RXDTOH and RXDTOL to form RXDTO[16-0].
LINRXFEN	LIN Break State Exit when RXD dominant fault occurs. LINRXFEN=1 configures the automatic BREAK state exit under RXD dominant fault conditions. LINRXFEN=0 disables this automatic exit (does not affect other break exit conditions). Software must take care of the LIN state machine.
RXDDEN	RXD Dominant Fault Interrupt Enable
RXDD_F	RXD Dominant Fault Interrupt Flag RXDD_F is set to 1 by hardware and must be cleared by software.
TXDDEN	TXD Dominant Fault Interrupt Enable
TXDD_F	TXD Dominant Fault Interrupt Flag TXDD_F is set to 1 by hardware and must be cleared by software.
TXTOWKE	TXD Dominant Timeout Wakeup Enable
RXTOWKE	RXD Dominant Timeout Wakeup Enable

TXDTOL (0xA0B1) LIN TXD Dominant Timeout LOW Registers R/W (0x00)

	7	6	5	4	3	2	1	0
RD	TXDTO[7:0]							
WR	TXDTO[7:0]							

TXDTOH (0xA0B2) LIN TXD Dominant Timeout HIGH Registers R/W (0x00)

	7	6	5	4	3	2	1	0
RD	TXDTO[15:8]							
WR	TXDTO[15:8]							

TXDTO TXD Dominant Timeout (TXDTO +1) * IOSCCLK

RXDTOL (0xA0B3) LIN RXD Dominant Timeout LOW Registers R/W (0x00)

	7	6	5	4	3	2	1	0
RD	RXDTO[8-1]							
WR	RXDTO[8:1]							

RXDTOH (0xA0B4) LIN RXD Dominant Timeout HIGH Registers R/W (0x00)

	7	6	5	4	3	2	1	0
RD	RXDTO[16-9]							
WR	RXDTO[16-9]							

RXDTO RXD Dominant Timeout (RXDTO[16-0] +1) * IOSCCLK

BSDCLRL (0xA0B5) Bus Stuck Dominant Clear Width Low Registers R/W (0x00)

	7	6	5	4	3	2	1	0
RD	BSDCLR[7-0]							
WR	BSDCLR[7-0]							

BSDCLRH (0xA0B6) Bus Stuck Dominant Clear Width High Registers R/W (0x00)

	7	6	5	4	3	2	1	0
RD	BSDCLR[15-8]							
WR	BSDCLR[15-8]							

BSDCLR Bus Stuck Dominant Clear Time (BSDCLR[15-0] +1) * SOSC32KHz

BSDACT (0xA0B8) Bus Stuck Dominant Active Width Registers R/W (0x00)

	7	6	5	4	3	2	1	0
RD	BSDACT[7-0]							
WR	BSDACT[7:0]							

BSDACT Bus Stuck Dominant Active Time (BSDACT[7-0] +1) * SOSC32KHz

BSDWKC (0xA0B7) Bus Stuck Dominant Fault Wakeup Configuration Register R/W (0x00)

	7	6	5	4	3	2	1	0
RD	BSDWF	BFWF	BSDWEN	BFWEN	WKFLT[3-0]			
WR	BSDWF	BFWF	BSDWEN	BFWEN	WKFLT[3-0]			

WKFLT[3-0] LIN Wakeup time (WKFLT[3-0]+1) * SOSC32KHz
BFWEN LIN Wakeup/Interrupt Enable
BFWF LIN Wakeup Interrupt Flag
BFWF is set to 1 by hardware and must be cleared by software.
BSDWEN LIN Bus Stuck Wakeup Interrupt Enable
BSDWF LIN Bus Stuck Wakeup Interrupt Flag

14. Serial Peripheral Interface (SPI)

The Serial Peripheral Interface (SPI) is an enhanced synchronous serial hardware, which is compatible with Motorola's SPI specifications. The SPI Controller includes 4-bytes FIFO for both transmit and receive. SPI Interface uses Master-Out-Slave-In (MOSI), Master-In-Slave-Out (MISO), Serial Clock (SCK), and Slave Select (SSN). SSN is low active and only meaningful in slave mode.

SPICR (0xA1) SPI Configuration Register R/W (0b001000xx)

	7	6	5	4	3	2	1	0
RD	SPIE	SPEN	MSTR	CPOL	CPHA	SCKE	SICKFLT	SSNFLT
WR	SPIE	SPEN	MSTR	CPOL	CPHA	SCKE	SICKFLT	SSNFLT

SPIE SPI interface Interrupt Enable bit

SPEN SPI interface Enable bit

MSTR SPI Master/Slave Switch. The bit is set for Master and clear for Slave.

CPOL SPI interface Polarity bit: Set to configure the SCK to stay HIGH while the SPI interface is idling and clear to keep it LOW.

CPHA Clock Phase Control bit: When CPOL=0, set to shift output data at the rising edge of SCK, and clear to shift output data at the falling edge of SCK. When CPOL=1, set to shift output data at the falling edge of SCK and clear to shift output data at the rising edge of SCK.

SCKE Clock Selection bit in Master Mode

Set to delay 0.5 periods of SCK to sample the input data.

Clear to use the normal edge of SCK to sample the input data.

The sampling phase is determined by the combinations of CPOL and CPHA settings shown in the following table.

CPOL	CPHA	DATAIN Edge			DATAOUT Edge
		Slave	Master, SCKE=0	Master, SCKE=1	
0	0	Rising edge	Rising edge	Falling edge	Falling edge
0	1	Falling edge	Falling edge	Rising edge	Rising edge
1	0	Falling edge	Falling edge	Rising edge	Rising edge
1	1	Rising edge	Rising edge	Falling edge	Falling edge

SSNFLT Enable noise filter function on signal SSN

SICKFLT Enable noise filter function on signals SDI and SCK

SPIMR (0xA2) SPI Mode Control Register R/W (0x00)

	7	6	5	4	3	2	1	0
RD	ICNT1	ICNT0	FCLR	-	SPR[2]	SPR[1]	SPR[0]	DIR
WR	ICNT1	ICNT0	FCLR	-	SPR[2]	SPR[1]	SPR[0]	DIR

ICNT1, ICNT0 FIFO Byte Count Threshold

This sets the FIFO threshold for generating SPI interrupts.

00 –the interrupt is generated after 1 byte is sent or received;

01 –the interrupt is generated after 2 bytes are sent or received;

10 –the interrupt is generated after 3 bytes are sent or received;

11 –the interrupt is generated after 4 bytes are sent or received.

FCLR FIFO Clear/Reset

Set to clear and reset transmit and receive FIFO.

SPR[2-0] SPI Clock Rate Setting. This is used to control the SCK clock rate of the SPI interface.

000 –SCK = SYSCLK/4;

001 – SCK = SYSCLK/6;

010 – SCK = SYSCLK/8;

011 – SCK = SYSCLK/16;

100 – SCK = SYSCLK/32;

101 – SCK = SYSCLK/64;

110 – SCK = SYSCLK/128;

111 – SCK = SYSCLK/256.
The recommend maximum SPI Slave clock rate shall be less than SYSCLK/8.

DIR — Transfer Format
Set DIR=1 to use MSB-first format.
Set DIR=0 to use LSB-first format.

SPIST (0xA3) SPI Status Register R/W (0x00)

	7	6	5	4	3	2	1	0
RD	SSPIF	ROVR	TOVR	TUDR	RFULL	REMPT	TFULL	TEMPT
WR	SSPIF	ROVR	TOVR	TUDR	-	-	-	-

SSPIF — SPI Interrupt Flag bit. Set by hardware to indicate the completion of data transfer. Clear by assigning this bit to 0 or disabling SPI.

ROVR — Receive FIFO-overrun Error Flag bit. When Receiver FIFO Full Status occurs and SPI receives new data, ROVR is set and generates an interrupt. Clear by assigning this bit to 0 or disabling SPI.

TOVR — Transmit FIFO-overrun Error Flag bit. When Transfers FIFO Full Status occurs and new data is written, TOVR is set and generates an interrupt. Clear by assigning this bit to 0 or disabling SPI.

TUDR — Transmit Under-run Error Flag bit. When the Transfer of FIFO Empty Status and new data transmission occur, TUDR is set and generates an interrupt. Clear by writing 0 to this bit or disabling SPI.

RFULL — Receive FIFO Full Status bit. Set when receiver FIFO is full. Read-only.

REMPT — Receive FIFO Empty Status bit. Set when receiver FIFO is empty. Read-only.

TFULL — Transmitter FIFO Full Status bit. Set when transfer FIFO is full. Read-only.

TEMPT — Transmitter FIF0 Empty Status bit. Set when transfer FIFO is empty. Read-only.

SPIDATA (0xA4) SPI Data Register R/W (0xXX)

	7	6	5	4	3	2	1	0
RD	SPI Receive Data Register							
WR	SPI Transmit Data Register							

14.1 SPI Master Timing Illustration

14.1.1 CPOL=0, CPHA=0

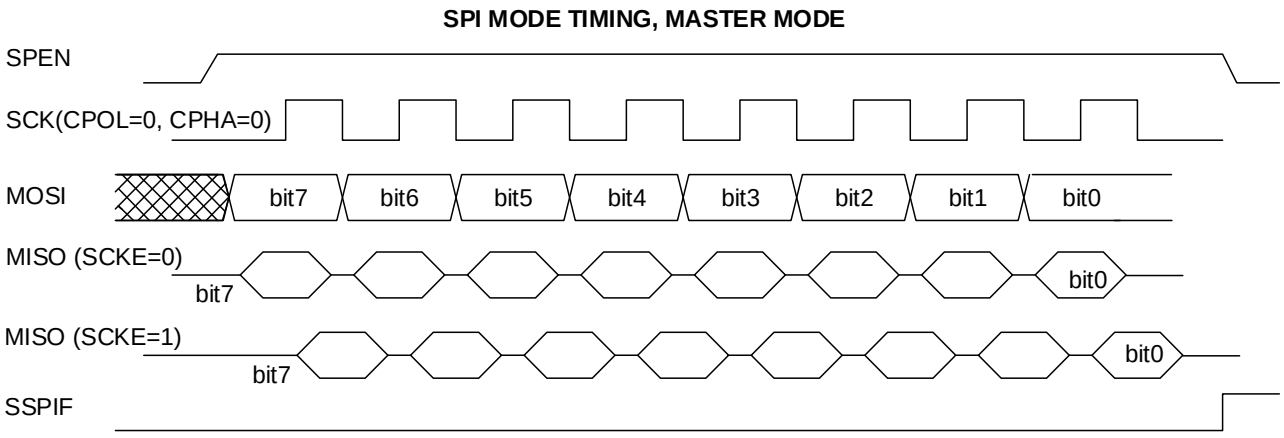

Figure 14-1 SPI Master Timing with CPOL=0, CPHA=0

14.1.2CPOL=0, CPHA=1

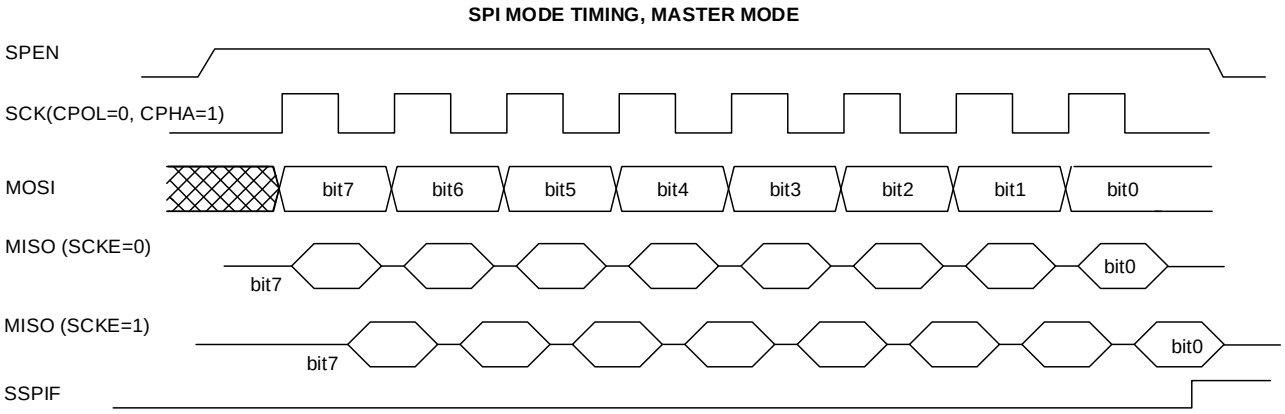

Figure 14-2 SPI Master Timing with CPOL=0, CPHA=1

14.1.3CPOL=1, CPHA=0

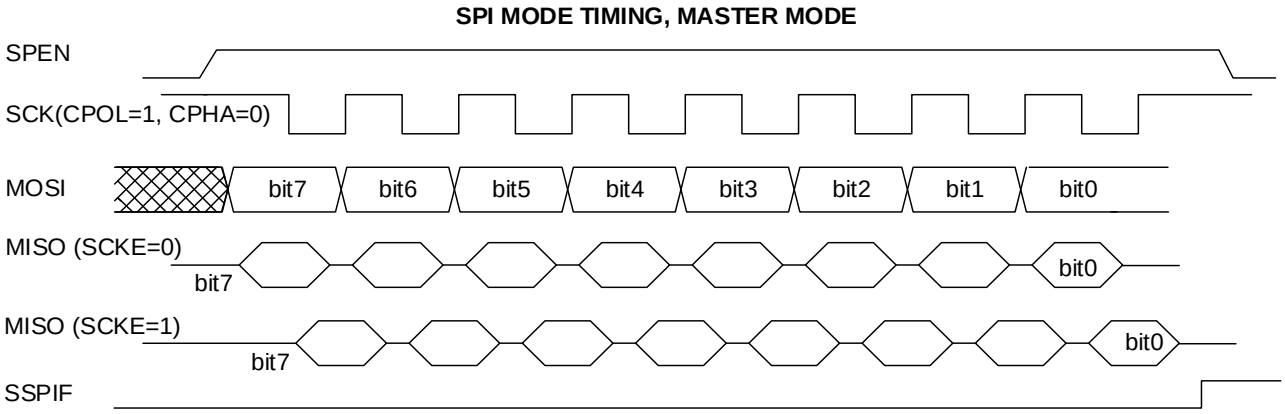

Figure 14-3 SPI Master Timing with CPOL=1, CPHA=0

14.1.4CPOL=1, CPHA=1

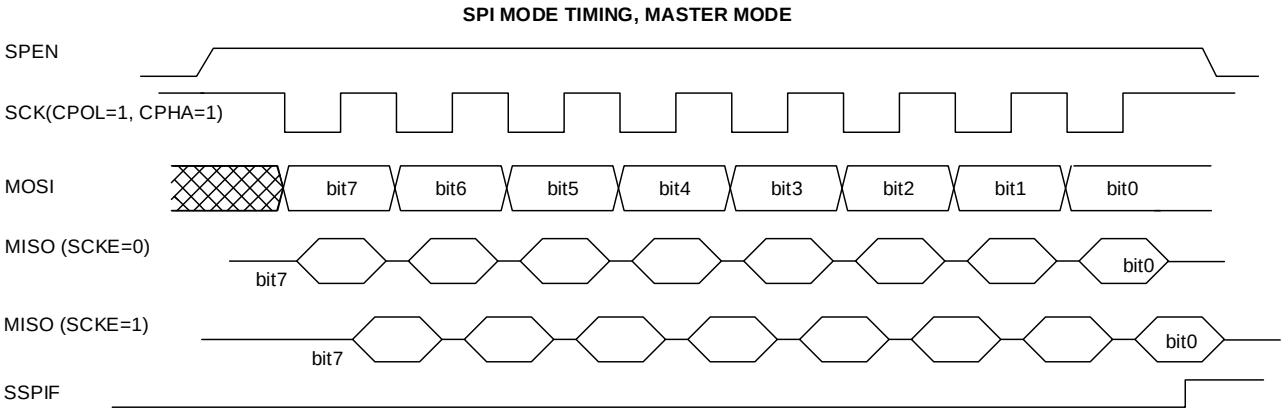

Figure 14-4 SPI Master Timing with CPOL=1, CPHA=1

14.2 SPI Slave Timing Illustration

14.2.1 CPOL=0, CPHA=0

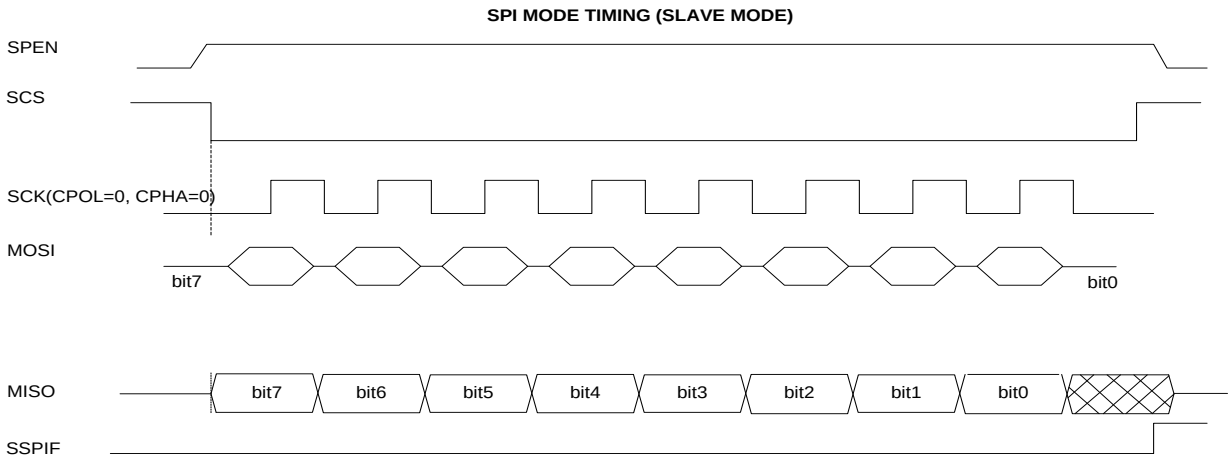

Figure 14-5 SPI Slave Timing with CPOL=0, CPHA=0

14.2.2 CPOL=0, CPHA=1

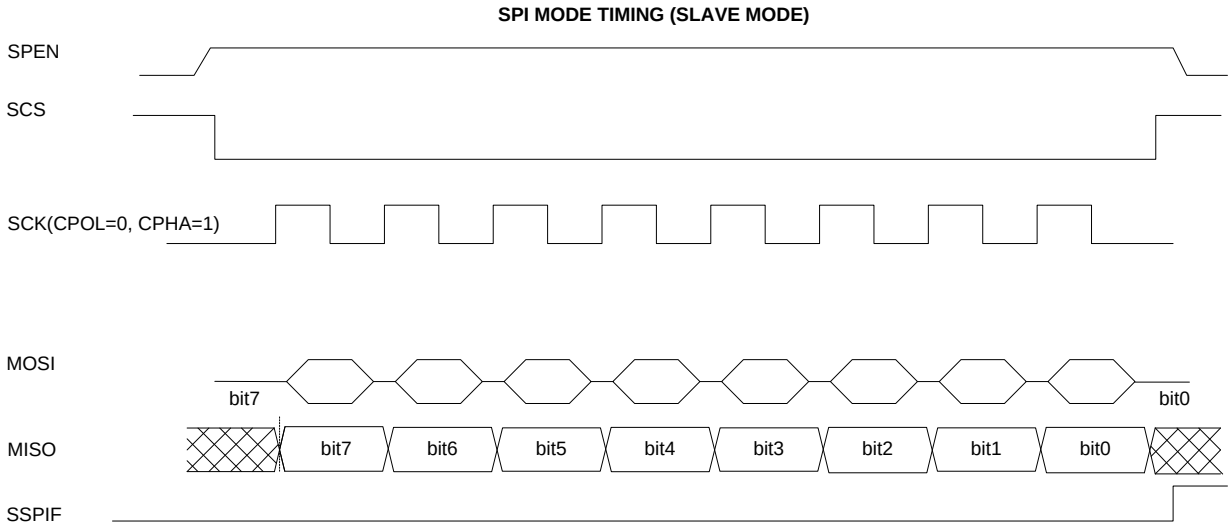

Figure 14-6 SPI Slave Timing with CPOL=0, CPHA=1

14.2.3 CPOL=1, CPHA=0

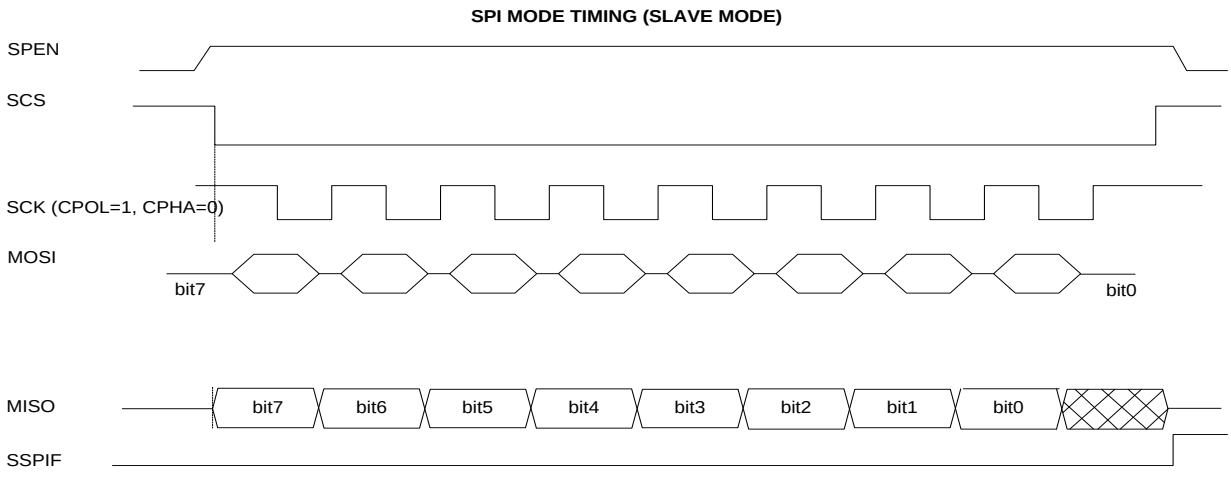

Figure 14-7 SPI Slave Timing with CPOL=1, CPHA=0

14.2.4CPOL=1, CPHA=1

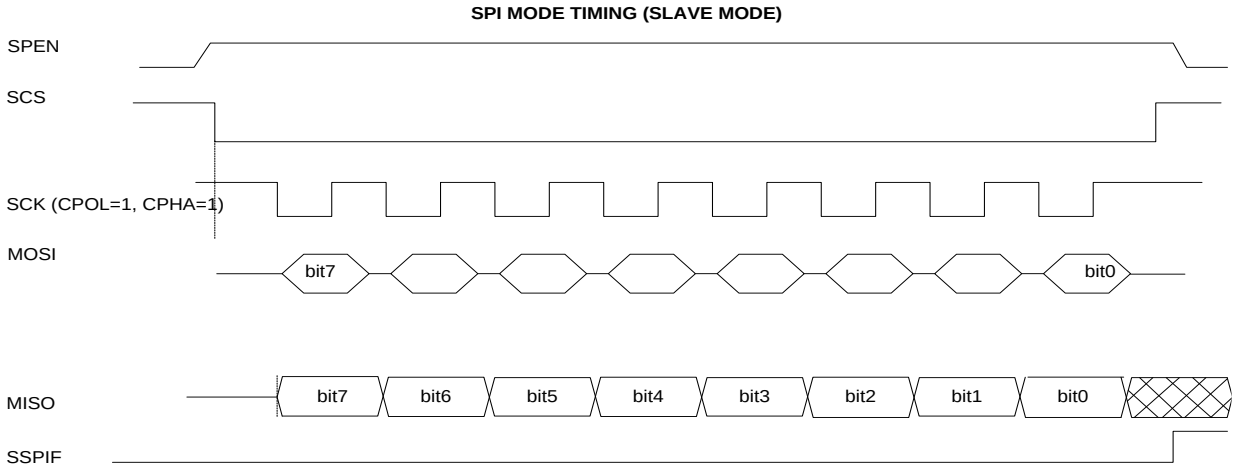

Figure 14-8 SPI Slave Timing with CPOL=1, CPHA=1

15. Timer with Compare/Capture and Quadrature Encoder

The Timer/Capture unit is based on a 16-bit counter with pre-scalable SYSCLK as a counting clock. The count starts from 0 and reloads when reaching TC (terminal count). TC is met when the count equals the period value. Along the counting, the count value is compared with COMP and when they match, a CC condition is met. Note that both PERIOD and COMP registers are double-buffered, and therefore any new value is updated after the current period ends. TC and CC can be used for triggering an interrupt, and also routed to GPIO. The output pulse width of TC and CC is programmable. For CC, it can also be configured as a PWM output. There are two data registers for capturing events. The capture event can be from external signals like GPIO (XCAPT) with an edge selection option, from QE block, or triggered by software. The software can also decide whether to reset the counter or not. This option gives a simpler calculation of consecutive capture evens without any offset. The following block diagram shows the TCC implementations.

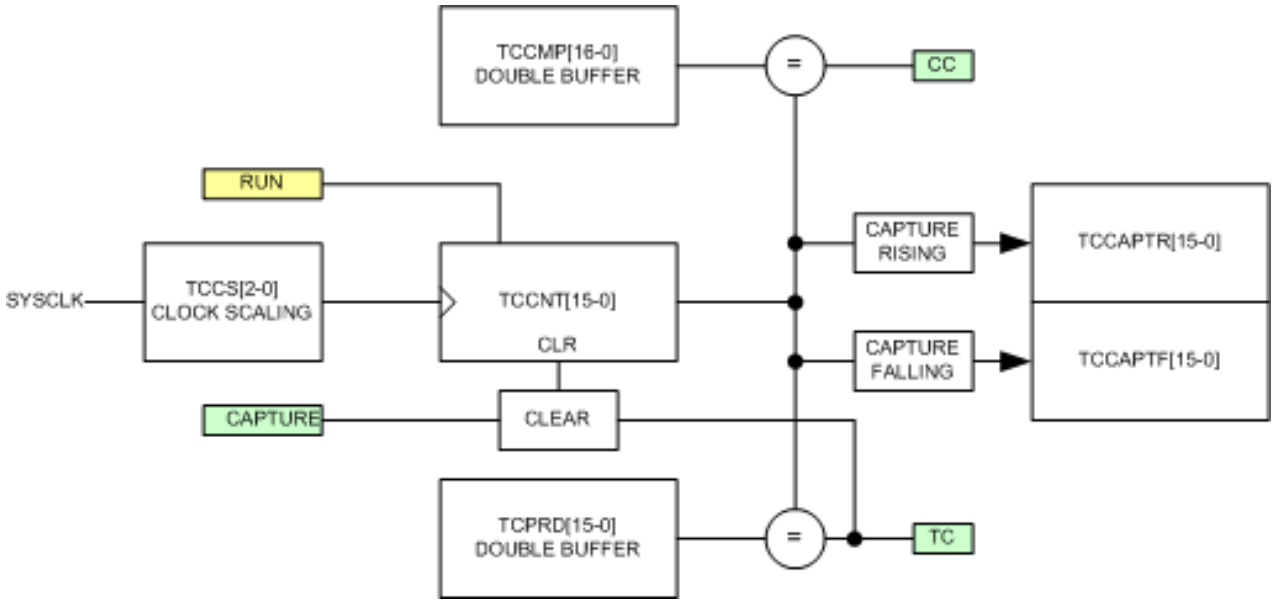

Figure 15-1 TCC implementations diagram

TCCFG1 (0xA050) TCC Configuration Register 1 R/W (0x00)

	7	6	5	4	3	2	1	0
RD	TCEN	TCCS[2-0]			CCSEL[1-0]		TCSEL	RUNST
WR	TCEN	TCCS[2-0]			CCSEL[1-0]		TCSEL	RUN

TCEN TC Enable
TC = 0 disables TC. In disabled state, TCCNT, and TCCPTR/TCCPTF are cleared to 0. TC and CC are also set to low.
TC = 1 enables TC. RUN bit also needs to set to 1 to start the counter, otherwise counter is in pause mode if RUN=0.

TCCS[2-0] TC Clock Scaling
000 SYSCLK
001 SYSCLK/2
010 SYSCLK/4
011 SYSCLK/8
100 SYSCLK/16
101 SYSCLK/32
110 SYSCLK/64
111 SYSCLK/128

CCSEL[1-0] CC Output Pulse Select
00 PW = 16 TCCLK
01 PW = 64 TCCLK
10 PWM Waveform (CC = low when TCCNT < CMP, CC = high when TCCNT >= CMP)
11 PWM Toggle waveform (CC toggles when TCCNT = CMP)

TCSEL TC Output Pulse Select
0 PW = 16 TCCLK

1 PW = 64 TCCLK

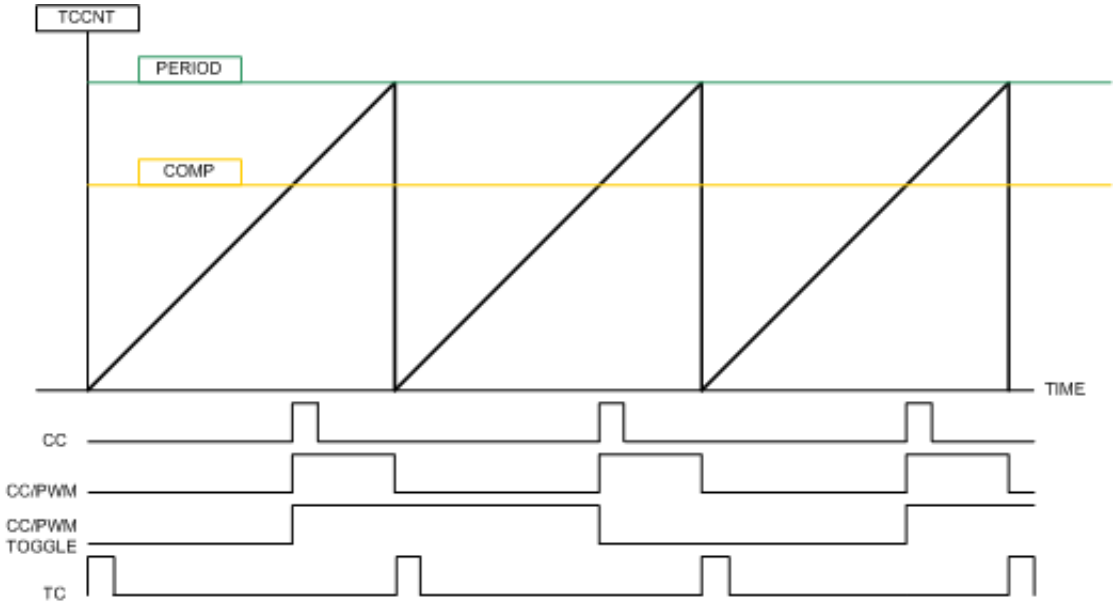

Figure 15-2 TCC timing diagram

RUNST Run Status
Set by hardware to indicate running TC counter. RUNST=1 indicates running.

RUN Run or Pause TC Counter
Writing “0” to RUN will pause the TC counting.
Writing “1” to RUN will resume the TC counting.

TCCFG2 (0xA051) TC Configuration Register 2 R/W (0x00)

	7	6	5	4	3	2	1	0
RD	-	IDXST	PHAST	PHBST	TCPOL	CCPOL	TCF	CCF
WR	RSTTC	-	-	-	TCPOL	CCPOL	TCF	CCF

RSTTC Reset TC
Writing RSTTC “1” will reset the TC counter and capture registers. Once the counter is cleared, the TC counter is put in STOP mode. To resume counting, the RUN bit must be set by software.

IDXST Index Input real-time status

PHAST PHA input real-time status

PHBST PHB input real-time status

TCPOL TC output polarity

CCPOL CC output polarity

TCF Terminal Count Interrupt Flag
TCF is set to “1” by hardware when terminal count occurs. TCF must be cleared by writing “0”.

CCF Compare Match Interrupt Flag
CCF is set to “1” by hardware when a compare match occurs. CCF must be cleared by writing “0”.

TCCFG3 (0xA052) TC Configuration Register 3 R/W (0x00)

	7	6	5	4	3	2	1	0
RD	IENTC	IENCC	QECEN	CPTCLR	XCREN	XCFEN	-	-
WR	IENTC	IENCC	QECEN	CPTCLR	XCREN	XCFEN	SWCPTR	SWCPTF

IENTC TC Interrupt Enable

IENCC CC Interrupt Enable

QECEN QE Capture Enable
QECEN=1 uses QE output event as a capture event.

CPTCLR Enable Clear Counter after Capture

	If CPTCLR=1, the TCCNT is cleared to 0 after each capture event. This allows continuous capture value with the identical initial value. If CPTCLR=0, the capture event does not affect the TCCNT counting.
XCREN	External Rising Edge Capture Enable XCREN=1 uses external input rising edge as a capture event.
XCFEN	External Falling Edge Capture Enable XCFEN=1 uses external input falling edge as a capture event.
SWCPTR	Software Capture R Writing "1" to SWCPTR will generate a capture event and capture the count value into TCCPTR register. This bit is cleared by hardware.
SWCPTF	Software Capture F Writing "1" to SWCPTF will generate a capture event and capture the count value into TCCPTF register. This bit is cleared by hardware.

Please note: All capture sources are not mutually exclusive, i.e., several capture sources can coexist.

TCPRDL (0xA054) TC Period Register Low Double Buffer R/W (0x00)

	7	6	5	4	3	2	1	0
RD	TCCNT[7-0]							
WR	TCPRD[7-0]							

TCPRDH (0xA055) TC Period Register High Double Buffer R/W (0x00)

	7	6	5	4	3	2	1	0
RD	TCCNT[15-8]							
WR	TCPRD[15-8]							

Note: Writing of PERIOD register must be done high byte first, then low byte. The writing takes effect at low byte writing. When reading the TCPRD register, it returns the current count value TCCNT[15-0].

TCCMPL (0xA056) TC Compare Register Low Double Buffer R/W (0x00)

	7	6	5	4	3	2	1	0
RD	TCCMP[7-0]							
WR	TCCMP[7-0]							

TCCMPH (0xA057) TC Compare Register High Double Buffer R/W (0x00)

	7	6	5	4	3	2	1	0
RD	TCCMP[15-8]							
WR	TCCMP[15-8]							

Note: Writing of COMPARE register must be done high byte first, then low byte. The writing takes effect at low byte writing.

TCCPTRL (0xA060) TC Capture Register R Low RO (0x00)

	7	6	5	4	3	2	1	0
RD	TCCPTR[7-0]							
WR	-							

TCCPTRH (0xA061) TC Capture Register R High RO (0x00)

	7	6	5	4	3	2	1	0
RD	TCCPTR[15-8]							
WR	-							

TCCPTFL (0xA062) TC Capture Register F Low RO (0x00)

	7	6	5	4	3	2	1	0
RD	TCCPTF[7-0]							
WR	-							

TCCPTFH (0xA063) TC Capture Register F High RO (0x00)

	7		6	5	4	3	2	1	0
RD	TCCPTF[15-8]								
WR	-								

The quadrature encoder is clocked by a scaled SYSCLK, and has three external inputs through GPIO multi-functions. The three inputs include two signals of 90 degrees phase difference, PHA and PHB, and an index indicating the terminal of the encoder. QE can function as an independent function block and also can be configured to couple with TCC and use TCC to calculate the speed information of the encoder. Using TCC to capture the TCC count value via the Index input of QE or terminal count of QE, the speed of QE input can be calculated. The QE unit implementation is shown in the following block diagram.

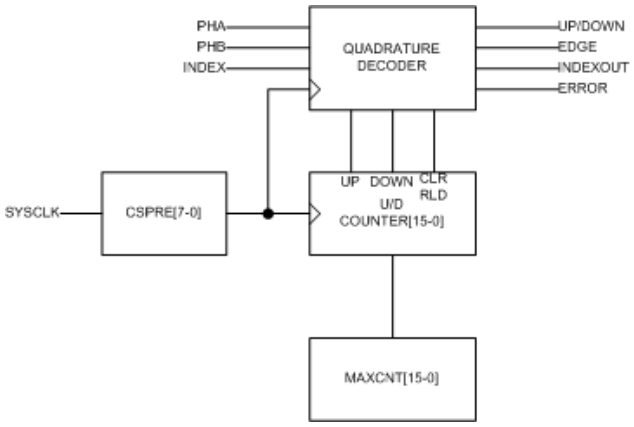

Figure 15-3 QE implementation diagram

QECNT is a 16-bit UP/DOWN counter with a configurable counting range; the range is specified by MAXCNT. The counter reset/reload can be triggered externally through the INDEX input.

QECFG1 (0xA070) TCC Configuration Register 1 R/W (0x00)

	7	6	5	4	3	2	1	0
RD	QEMODE[1-0]		QECS[1-0]		SWAP	DBCS[2-0]		
WR	QEMODE[1-0]		QECS[1-0]		SWAP	DBCS[2-0]		

QEMODE[1-0] QE Mode
00 – Disable QE
01 – 1X mode
10 – 2X mode
11 – 4X mode

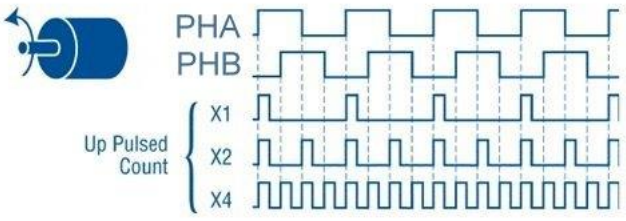

Figure 15-4 Timing diagram of PHA/PHB with X1/X2/X4 modes

QECS[1-0] QE Clock Scaling

00 SYSCLK/4
01 SYSCLK/16
10 SYSCLK/64
11 SYSCLK/256

SWAP Swap PHA and PHB

DBCS[2-0] De-Bounce Clock Scaling
000 Disable de-bounce
001 SYSCLK/2
010 SYSCLK/4
011 SYSCLK/8
100 SYSCLK/16
101 SYSCLK/64
110 SYSCLK/128
111 SY1SCLK/256
De-bounce time is three DBCS period.

QECFG2 (0xA071) QE Configuration Register 2 R/W (0x00)

	7	6	5	4	3	2	1	0
RD	DIR	ERRF	RLDM[1-0]		TCF	IDXF	DIRF	CNTF
WR	-	ERRF	RLDM[1-0]		TCF	IDXF	DIRF	CNTF

DIR Direction Status
Indicate UP/DOWN direction

ERRF Phase Error Flag
ERRF is set to 1 by hardware if PHA and PHB change value at the same time.
ERRF must be cleared by software.

RLDM[1-0] QE Counter Reload Mode
RLDM[1-0] = 00 No Reload, QECNT will count up/down between 0x0000 or 0xFFFF
RLDM[1-0] = 01 Reload using Index event.
Reload QECNT=0, when Index==1 && UP
Reload QECNT=QEMAX, when Index==1 && DOWN
RLDM[1-0] = 10 Reload using TC event.
Reload QECNT=0, when QECNT==QEMAX && UP
Reload QECNT=QEMAX, when QECNT==0 && DOWN
RLDM[1-0] = 11 Reload using both Index and TC events
Combine Index and TC events and reload whichever occurs earlier.

TCF TC Event Interrupt Flag
TCF is set by hardware when a TC event interrupt has occurred. TCF needs to be cleared by writing “0”.

IDXF Index Event Interrupt Flag
IDXF is set by hardware when an Index event interrupt has occurred. IDXF needs to be cleared by writing “0”.

DIRF Direction Change Event Interrupt Flag
DIRF is set by hardware when a Direction change event interrupt has occurred.
DIRF needs to be cleared by writing “0”.

CNTF Count Change Event Interrupt Flag
CNTF is set by hardware when a QE count change event interrupt has occurred.
CNTF needs to be cleared by writing “0”.

QECFG3 (0xA072) QE Configuration Register 3 R/W (0x00)

	7	6	5	4	3	2	1	0
RD	IENTC	IENIDX	IENDIR	IENCNT	IENERR	IDXEN	IDXM[1-0]	
WR	IENTC	IENIDX	IENDIR	IENCNT	IENERR	IDXEN	IDXM[1-0]	

IENTC Interrupt Enable for TC
TC condition for QE is defined as the following conditions
1. QECNT=QEMAX when UP
2. QECNT=0 when down

IENIDX Interrupt Enable for Index event

IENDIR	Interrupt Enable for Direction Change
IENCNT	Interrupt Enable for any QECNT change
IDXEN	Index Input Enable IDXEN=0 gates out the external INDEX input and is gated to 0. IDXEN=1 allows external INDEX.
IDXM[1-0]	Index Match Selection, this is applicable only for X2 and X4 modes. 00 = up phase 00 → 10 down phase 10 →00 01 = up phase 10 → 11 down phase 11 → 10 10 = up phase 01 → 00 down phase 00 → 01 11 = up phase 11 → 01 down phase 01 → 11

QECNTL (0xA074) QE Counter Low R/W (0x00)

	7	6	5	4	3	2	1	0
RD	QECNT[7-0]							
WR	QECNTINI[7-0]							

QECNTH (0xA075) QE Counter High R/W (0x00)

	7	6	5	4	3	2	1	0
RD	QECNT[15-8]							
WR	QECNTINI[15-8]							

Reading QECNT will return the current QE counter value. Writing QECNT will set the current count value. Writing QECNT is allowed only when QE is in disabled state.

QEMAXL (0xA076) QE Maximum Counter Low R/W (0x00)

	7	6	5	4	3	2	1	0
RD	QEMAX[7-0]							
WR	QEMAX[7-0]							

QEMAXH (0xA077) QE Maximum Counter High R/W (0x00)

	7	6	5	4	3	2	1	0
RD	QEMAX[15-8]							
WR	QEMAX[15-8]							

QEMAX holds the maximum count of the QE counter. When QEMAX is reached, a TC event is triggered and QE counter is reloaded.

16. PWM Controller

PWM controller provides programmable 6 channels 12/10/8 bit PWM center-aligned duty cycle outputs. The counting clock of PWM is programmable and the base frequency of the PWM is just the counting clock divided by 8192/2048/512 for 12/10/8 bit configurations due to center-alignment counting. PWM outputs are multiplexed with GPIO ports.

PWMCFG1 (0xA080) PWM Clock Scaling Setting Register R/W (0x00)

	7	6	5	4	3	2	1	0
RD	PWMEN	MODE[1-0]		CS[4-0]				
WR	PWMEN	MODE[1-0]		CS[4-0]				

PWMEN — PWM Controller Enable
PWMEN=0 clears the counter, reset the PWM state and all channel outputs are forced to 0.
PWMEN=1 allows normal running operation of PWM controller.

MODE[1-0] — PWM Resolution Select
00 = 8-bit
01 = 10-bit
10 = 12-bit
11 = Reserved

CS[4-0] — PWM Counting Clock Scaling
The counting clock is (SYSCLK / (CS[4-0] + 1)).
(PWM_Clock = (counting clock / 8192) for 12-bit configuration)
(PWM_Clock = (counting clock / 2048) for 10-bit configuration)
(PWM_Clock = (counting clock / 512) for 8-bit configuration)

PWMCFG2 (0xA081) PWM Interrupt Enable and Flag R1egister R/W (0x08)

	7	6	5	4	3	2	1	0
RD	ZTRGEN	CTRGEN	ZINTEN	CINTEN	SYNCEN	-	ZINTF	CINTF
WR	ZTRGEN	CTRGEN	ZINTEN	CINTEN	SYNCEN	-	ZINTF	CINTF

ZTRGEN — Zero ADC Trigger Enable

CTRGEN — Center ADC Trigger Enable

ZINTEN — Zero Interrupt Enable
ZINTEN=1 allows PWM Controller to generate interrupt when counter is 0.

CNTEN — Center Interrupt Enable
CINTEN=1 allows PWM Controller to generate interrupt when counter is at the mid value.

SYNCEN — SYNCEN=1, allow all channel duty to be updated by writing SYNC=1.
SYNCEN=0, duty double buffer update immediately at next PWM start.

ZINTF — Zero Interrupt Flag
ZINTF is set to 1 by hardware to indicate a Zero interrupt has occurred. ZINTF must be cleared by software.

CINTF — Center Interrupt Flag
CINTF is set to 1 by hardware to indicate a Center interrupt has occurred. CINTF must be cleared by software.

PWMCFG3 (0xA082) PWM Configuration 3 Register R/W (0x00)

	7	6	5	4	3	2	1	0
RD	PRSEN	SYNC	POL[5-0]					
WR	PRSEN	SYNC	POL[5-0]					

PRSEN — Pseudo-Random Sequence Enable
PRSEN=1 will enable a pseudo random sequence to the PWM output width. This can be an effective way to reduce EMI for output. When PRSEN=1, the instantaneous duty cycle will be affected cycle by cycle, but the average duty cycle remains the same.

SYNC — Channel Synchronize

Writing SYNC=1 will cause the loading of duty register on the next PWM count=0 event (ZINTF = 1). The purpose of this is to synchronize the timing of all the PWM channels. SYNC is cleared by hardware after reloading is completed.
Reading SYNC by software can tell whether reload has been in effect or not.

POL[5-0] Channel Polarity Control
POL[J] = 0 for normal polarity and POL[J]=1 for reverse polarity.

There are 6 PWMxDTY registers to define the duty cycle of each PWM channel. If PWMxDTY = 0, the output is 0. If PWMxDTY = maximum value, the output duty cycle is maximum to (period – 1)/period. PWMxDTY is always double-buffered and is loaded to duty cycle comparator when the SYNC bit is set and the current counting cycle is completed. For 8-bit, only the PWMxDTY[7-0] is used; for 10-bit, PWMxDTY[9-0] is used; for 12-bit, PWMxDTY[11-0] is used. If PWMEN=0 (PWM is disabled), then writing to PWMxDTY register is immediately valid.

PWM0DTYL (0xA084) PWM0 Duty Register L R/W (0x00)

	7	6	5	4	3	2	1	0
RD	PWM0DTY[7-0]							
WR	PWM0DTY[7-0]							

PWM0DTYH (0xA085) PWM0 Duty Register H R/W (0x00)

	7	6	5	4	3	2	1	0
RD		-	-	-	PWM0DTY[11-8]			
WR	-	-	-	-	PWM0DTY[11-8]			

PWM1DTYL (0xA086) PWM1 Duty Register L R/W (0x00)

	7	6	5	4	3	2	1	0
RD	PWM1DTY[7-0]							
WR	PWM1DTY[7-0]							

PWM1DTYH (0xA087) PWM1 Duty Register H R/W (0x00)

	7	6	5	4	3	2	1	0
RD	-	-	-	-	PWM1DTY[11-8]			
WR	-	-	-	-	PWM1DTY[11-8]			

PWM2DTYL (0xA088) PWM2 Duty Register L R/W (0x00)

	7	6	5	4	3	2	1	0
RD	PWM2DTY[7-0]							
WR	PWM2DTY[7-0]							

PWM2DTYH (0xA089) PWM2 Duty Register H R/W (0x00)

	7	6	5	4	3	2	1	0
RD	-	-	-	-	PWM2DTY[11-8]			
WR	-	-	-	-	PWM2DTY[11-8]			

PWM3DTYL (0xA08A) PWM3 Duty Register L R/W (0x00)

	7	6	5	4	3	2	1	0
RD	PWM3DTY[7-0]							
WR	PWM3DTY[7-0]							

PWM3DTYH (0xA08B) PWM3 Duty Register H R/W (0x00)

	7	6	5	4	3	2	1	0
RD	-	-	-	-	PWM3DTY[11-8]			
WR	-	-	-	-	PWM3DTY[11-8]			

PWM4DTYL (0xA08C) PWM3 Duty Register L R/W (0x00)

	7	6	5	4	3	2	1	0
RD	PWM4DTY[7-0]							
WR	PWM4DTY[7-0]							

PWM4DTYH (0xA08D) PWM3 Duty Register H R/W (0x00)

	7	6	5	4	3	2	1	0
RD	-	-	-	-	PWM4DTY[11-8]			
WR	-	-	-	-	PWM4DTY[11-8]			

PWM5DTYL (0xA08E) PWM5 Duty Register LR/W (0x00)

	7	6	5	4	3	2	1	0
RD	PWM5DTY[7-0]							
WR	PWM5DTY[7-0]							

PWM5DTYH (0xA08F) PWM5 Duty Register H R/W (0x00)

	7	6	5	4	3	2	1	0
RD	-	-	-	-	PWM5DTY[11-8]			
WR	-	-	-	-	PWM5DTY[11-8]			

17. PWM8 Controller

PWM8 is an 8-bit PWM generator with 16 channel outputs. The main purpose of PWM8 is for controlling LED lighting. The even channel outputs are left adjusted and odd channel outputs are right adjusted. The duty registers are double-buffered and the new values are updated at the start of the new PWM cycle. It is also possible to synchronize the update of all the channels through SYNC control.

PWM8CF (0xA04C) PWM8 Configuration Register R/W (0x00)

	7	6	5	4	3	2	1	0
RD	PWM8EN	MODE	-	SYNCEN	-	-	TINTE	ZINTE
WR	PWM8EN	MODE	-	SYNCEN	-	-	TINTE	ZINTE

PWM8EN PWM8 Controller Enable
PWM8EN=0 clears the counter, resets the PWM state and all channel outputs are forced to 0 after finishing the current PWM cycle.
PWM8EN=1 allows normal running operation of PWM controller.

MODE PWM Mode Select
MODE=0, select full off.
MODE=1, select full on.

SYNCEN SYNCEN=1, allow all channel duties to be updated by writing SYNC=1.
SYNCEN=0, duty double buffer is updated immediately at next PWM start.

PWM8CS (0xA04D) PWM8 Clock Scaling Setting Register R/W (0x00)

	7	6	5	4	3	2	1	0
RD	CS[7-0]							
WR	CS[7-0]							

PWM8INT (0xA04E) PWM8 SYNC and Interrupt Flag Register R/W (0x00)

	7	6	5	4	3	2	1	0
RD	SYNC	-	-	-	-	-	TINTF	ZINTF
WR	SYNC	-	-	-	-	-	TINTF	ZINTF

SYNC Synchronize Update Duty
Writing SYNC=1 will trigger a synchronized update of PWM duty for the next PWM cycle. SYNC is self-cleared when the update is completed.

TINTF Trigger Interrupt Flag
TINTF is set to 1 by hardware to indicate a Trigger interrupt has occurred. TINTF must be cleared by software.

ZINTF Zero Interrupt Flag
ZINTF is set to 1 by hardware to indicate a Zero interrupt has occurred. ZINTF must be cleared by software.

PWM8TRG (0xA04F) PWM Trigger Register R/W (0x00)

	7	6	5	4	3	2	1	0
RD	PWMTRG[7-0]							
WR	PWMTRG[7-0]							

PWMTRG Trigger pointer setting
Always uses left aligned.

PWMDTY0 (0xA0A0) PWM Channel 0 Duty Register R/W (0x00)

	7	6	5	4	3	2	1	0
RD	PWMDTY0[7-0]							
WR	PWMDTY0[7-0]							

PWMDTY1 (0xA0A1) PWM Channel 1 Duty Register R/W (0x00)

	7	6	5	4	3	2	1	0
RD	PWMDTY1[7-0]							
WR	PWMDTY1[7-0]							

PWMDTY2 (0xA0A2) PWM Channel 2 Duty Register R/W (0x00)

	7	6	5	4	3	2	1	0
RD	PWMDTY2[7-0]							
WR	PWMDTY2[7-0]							

PWMDTY3 (0xA0A3) PWM Channel 3 Duty Register R/W (0x00)

	7	6	5	4	3	2	1	0
RD	PWMDTY3[7-0]							
WR	PWMDTY3[7-0]							

PWMDTY4 (0xA0A4) PWM Channel 4 Duty Register R/W (0x00)

	7	6	5	4	3	2	1	0
RD	PWMDTY4[7-0]							
WR	PWMDTY4[7-0]							

PWMDTY5 (0xA0A5) PWM Channel 5 Duty Register R/W (0x00)

	7	6	5	4	3	2	1	0
RD	PWMDTY5[7-0]							
WR	PWMDTY5[7-0]							

PWMDTY6 (0xA06) PWM Channel 6 Duty Register R/W (0x00)

	7	6	5	4	3	2	1	0
RD	PWMDTY6[7-0]							
WR	PWMDTY6[7-0]							

PWMDTY7 (0xA0A7) PWM Channel 7 Duty Register R/W (0x00)

	7	6	5	4	3	2	1	0
RD	PWMDTY7[7-0]							
WR	PWMDTY7[7-0]							

PWMDTY8 (0xA0A8) PWM Channel 8 Duty Register R/W (0x00)

	7	6	5	4	3	2	1	0
RD	PWMDTY8[7-0]							
WR	PWMDTY8[7-0]							

PWMDTY9 (0xA0A9) PWM Channel 9 Duty Register R/W (0x00)

	7	6	5	4	3	2	1	0
RD	PWMDTY9[7-0]							
WR	PWMDTY9[7-0]							

PWMDTY10 (0xA0AA) PWM Channel 10 Duty Register R/W (0x00)

	7	6	5	4	3	2	1	0
RD	PWMDTY10[7-0]							
WR	PWMDTY10[7-0]							

PWMDTY11 (0xA0AB) PWM Channel 11 Duty Register R/W (0x00)

	7	6	5	4	3	2	1	0
RD	PWMDTY11[7-0]							
WR	PWMDTY11[7-0]							

PWMDTY12 (0xA0AC) PWM Channel 12 Duty Register R/W (0x00)

	7	6	5	4	3	2	1	0
RD	PWMDTY12[7-0]							
WR	PWMDTY12[7-0]							

PWMDTY13 (0xA0AD) PWM Channel 13 Duty Register R/W (0x00)

	7	6	5	4	3	2	1	0
RD	PWMDTY13[7-0]							
WR	PWMDTY13[7-0]							

PWMDTY14 (0xA0AE) PWM Channel 14 Duty Register R/W (0x00)

	7	6	5	4	3	2	1	0
RD	PWMDTY14[7-0]							
WR	PWMDTY14[7-0]							

PWMDTY15 (0xA0AF) PWM Channel 15 Duty Register R/W (0x00)

	7	6	5	4	3	2	1	0
RD	PWMDTY15[7-0]							
WR	PWMDTY15[7-0]							

18. Buzzer and Melody Controller

The buzzer and melody controller can be used to generate a simple buzzer sound or single-tone melody. It contains a two-note Ping-Pong buffer, each with programmable tone frequency, and a duration/pause timer. The tone frequency is derived from SYSCLK divided by either 32 or 64, and the tone frequency is generated with a resolution of 12-bit to support precision tone generation with a wide octave span. The duration/pause timers can be programmed in 1ms/2ms/4ms/8ms steps. The two notes can be played sequentially once, or can be played in Ping-Pong styles for melody. A POW (Power on Width) timer is also included with the same time steps. POW timer can be used to generate external power control of the buzzer element. POW timer is started when either note A or B is started.

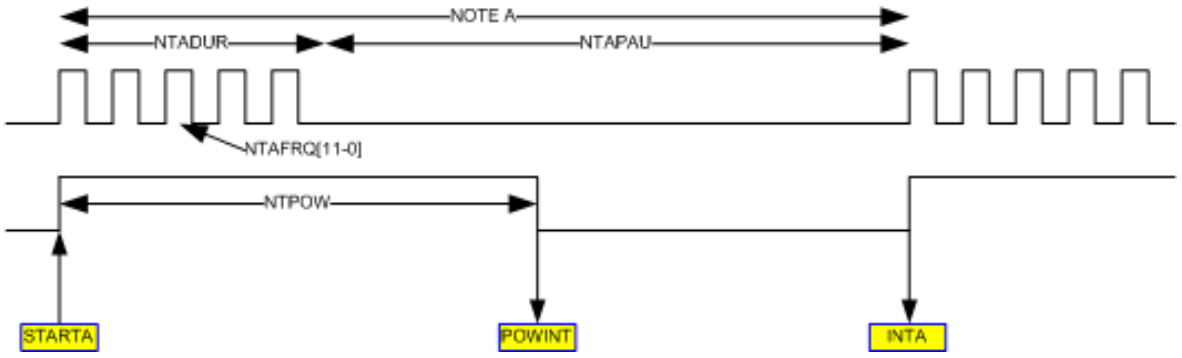

Figure 18-1 Buzzer and Melody output timing diagram

NTAFRQL (0xA040) Note A Frequency Register R/W (0x00)

	7	6	5	4	3	2	1	0
RD	NTAFRQ[7-0]							
WR	NTAFRQ[7-0]							

NTAFRQH (0xA041) Note A Frequency Register R/W (0x00)

	7	6	5	4	3	2	1	0
RD	-		-		NTAFRQ[11-8]			
WR	-		-		NTAFRQ[11-8]			

Tone frequency is SYSCLK / (32 or 64) / (NTAFRQ[11-0]+1).

NTADUR (0xA042) Note A Duration Register R/W (0x00)

	7	6	5	4	3	2	1	0
RD	NTADUR[7-0]							
WR	NTADUR[7-0]							

Tone duration is TU * NTADUR[7-0]

NTAPAU (0xA043) Note A Pause Register R/W (0x00)

	7	6	5	4	3	2	1	0
RD	NTAPAU[7-0]							
WR	NTAPAU[7-0]							

Tone pause is TU * NTAPAU[7-0]

NTBFRQL (0xA044) Note B Frequency Register R/W (0x00)

	7	6	5	4	3	2	1	0
RD	NTBFRQ[7-0]							
WR	NTBFRQ[7-0]							

NTBFRQH (0xA045) Note B Frequency Register R/W (0x00)

	7		6	5	4	3	2	1	0
RD		-		-		NTBFRQ[11-8]			
WR		-		-		NTBFRQ[11-8]			

NTBDUR (0xA046) Note B Duration Register R/W (0x00)

	7	6	5	4	3	2	1	0
RD	NTBDUR[7-0]							
WR	NTBDUR[7-0]							

NTBPAU (0xA047) Note B Pause Register R/W (0x00)

	7	6	5	4	3	2	1	0
RD	NTBPAU[7-0]							
WR	NTBPAU[7-0]							

NTPOW (0xA049) Note Power On Window Register R/W (0x00)

	7	6	5	4	3	2	1	0
RD	NTPOW [7-0]							
WR	NTPOW [7-0]							

NTPOW defines a timer after either STARTA or STARTB. It uses the same time unit as duration and pause. When the timer expires, it generates an interrupt by setting INTFP bit.

NTTU (0xA04A) Note Time Unit Register R/W (0x00)

	7	6	5	4	3	2	1	0
RD	TU[1-0]		-	TBASE	-	-	INTEPOW	INTFP
WR	TU[1-0]		-	TBASE	-	-	INTEPOW	INTFP

TU[1-0] Time Unit
TU[1-0] defines the time unit for duration and pause, and POW timer. This is derived from SOSC32KHz and is not dependent on tone frequency setting. The tone unit is as follows.
00 = 1msec
01 = 2msec
10 = 4msec
11 = 8msec

TBASE Tone Base Frequency Select
TBASE=0 uses SYSCLK/32 as base
TBASE=1 uses SYSCLK/64 as base

INTEPOW POW Timer Interrupt Enable

INTFP POW Interrupt Flag
INTFP is set by hardware when POW timer expires. It must be cleared by software.

BZCFG (0xA048) Buzzer Configure Register R/W (0x00)

	7	6	5	4	3	2	1	0
RD	BZEN	BZPOL	INTENB	INTENA	INTFB	INTFA	BUSYB	BUSYA
WR	BZEN	BZPOL	INTENB	INTENA	INTFB	INTFA	STARTB	STARTA

BZEN Buzzer Control Enable
BZEN=1 enables the buzzer controller.
BZEN=0 disables the buzzer controller.

BZPOL BZOUT Polarity Setting
BZPOL=1 for BZOUT inverted
BZPOL=0 for normal polarity

INTENB Note B End Interrupt Enable

	INTENB=1 enables the note B end interrupt. The interrupt is triggered when note B playing is completed.
INTENA	Note A End Interrupt Enable INTENA =1 enables the note A end interrupt. The interrupt is triggered when note A playing is completed.
INTFB	Note B End Interrupt Flag INTFB is set to 1 by hardware if INTENB=1 and Note B playing completes. INTFB needs to be cleared by writing 0.
INTFA	Note A End Interrupt Flag INTFA is set to 1 by hardware if INTENA=1 and Note A playing completes. INTFA needs to be cleared by writing 0.
STARTB	Note B Start Command Writing STARTB=1 initiates a session output on the buzzer. Writing 0 to STARTB has no effect. STARTB is self-cleared when the note is completed.
STARTA	Note A Start Command Writing STARTA=1 initiates a session output on the buzzer. Writing 0 to STARTA has no effect. STARTA is self-cleared when the note is completed.
Note: If STARTA and STARTB are set to 1 at the same time, then Note A is played first followed by Note B. Software can do this for a simple two-notes melody.	
BUSYB	Note B is playing busy Status BUSYB is set to 1 by hardware when the output is active playing note B.
BUSYA	Note A is playing busy Status BUSYA is set to 1 by hardware when the output is active playing note A.

19. Core Regulator and Low Voltage Detection

An on-chip serial regulator converts VDD into VDDC for internal circuit supply voltage. Typical value for VDDC is 1.5V at normal mode. In sleep mode, a backup regulator with typical value of 1.42V supplies VDDC. The VDDC can be trimmed and the calibrated trim value for 1.5V is stored in IFB by the manufacturer.

REGTRM (0xA000) Regulator Trim Register R/W (0x80) TB protected

	7	6	5	4	3	2	1	0
RD	REGTRM[7-0]							
WR	REGTRM[7-0]							

19.1 Supply Low Voltage Detection (LVD)

The supply Low Voltage Detection (LVD) circuit detects VDD < VTH condition and can be used to generate an interrupt or reset condition. LVD defaults to disabled state to save power. An enabled LVD circuit consumes about 100uA to 200uA. The LVDTHD[6-0] sets the compare threshold according to the following equation when LVDTHV is the detection voltage.

LVDTHV = VDDC * (1 + 2 * (1 – LVDTHD[6-0] / 128)
= 1.5 + 3 * (1 – LVDTHD[6-0] / 128), if VDDC is calibrated to 1.5V.

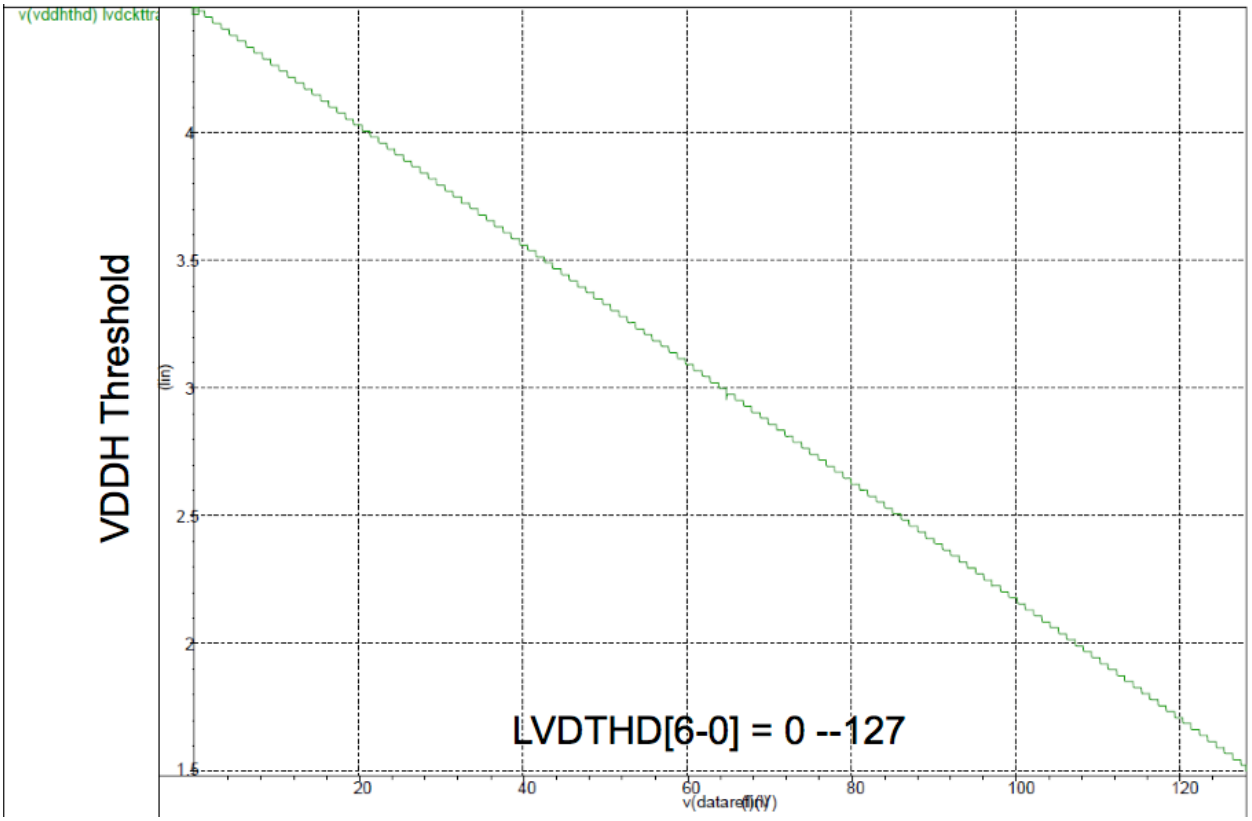

Figure 19-1 LVD Threshold VS LVDTHD[6-0]

LVDCFG (0xA010) Supply Low Voltage Detection Configuration Register R/W (0x08) TB Protected except bit 0 LVTIF

	7	6	5	4	3	2	1	0
RD	LVDEN	LVREN	LVTEN	LVDFLTEN	RSTNFLEN	-	-	LVTIF
WR	LVDEN	LVREN	LVTEN	LVDFLTEN	RSTNFLEN	-	-	LVTIF

LVDEN LVD Enable bit. Set to turn on supply voltage detection circuits.
LVREN LVR Enable bit. LVREN = 1 allows low voltage detection conditions to cause a system reset.
LVTEN LVT Enable bit. LVTEN = 1 allows low voltage detect condition to generate an interrupt.
LVDFLTEN LVD Filter Enable

	LVDFLTEN = 1 enables a noise filter on the supply detection circuits. The filter is set at around 30usec.
RSTNFLEN	RSTN Active Analog Filter Enable RSTNFLEN = 1 enables an analog noise filter on the RSTN input pad active detection circuits. The filter is set at around 4usec. This is further filtered by a digital circuit to filter out any noise less than 4msec.
LVTIF	Low Voltage Detect Interrupt Flag LVTIF is set by hardware when LVD detection occurs and must be cleared by software.

LVDTHD (0xA011) Supply Low Voltage Detection Threshold Register R/W (0bx1111111) TB Protected

	7	6	5	4	3	2	1	0
RD	-	LVDTHD6	LVDTHD5	LVDTHD4	LVDTHD3	LVDTHD2	LVDTHD1	LVDTHD0
WR	-	LVDTHD6	LVDTHD5	LVDTHD4	LVDTHD3	LVDTHD2	LVDTHD1	LVDTHD0

LVDTHD = 0x00 will set the detection threshold at its maximum, and LVDTHD = 0x7F will set the detection threshold at its minimum.

LVDHYS (0xA012) Supply Low Voltage Detection Threshold Hysteresis Register R/W (0x00) TB Protected

	7	6	5	4	3	2	1	0
RD	LVDHYEN	LVDHYS6	LVDHYS5	LVDHYS4	LVDHYS3	LVDHYS2	LVDHYS1	LVDHYS0
WR	LVDHYEN	LVDHYS6	LVDHYS5	LVDHYS4	LVDHYS3	LVDHYS2	LVDHYS1	LVDHYS0

To ensure a solid Low Voltage detection, a digital controlled hysteresis is used. If LVDHYEN = 1, when LVD is asserted a new threshold, it is defined by LVDHYS[6-0] instead of LVDTHD[6-0]. In typical applications, LVDHYS[6-0] should be set to be smaller than LVDTHD[6-0] such that recovery voltage is higher than the low voltage detection voltage.

20. IOSC and SOSC

20.1 IOSC 16MHz/32MHz

An on-chip 16MHz/32MHz Oscillator with low-temperature coefficient provides the system clock to the CPU and other logic. IOSC uses VDDC as the power supply and can be calibrated and trimmed. The accuracy of the frequency is +/- 2% within the operating conditions. This oscillator is stopped and enters into standby mode when CPU is in STOP/SLEEP mode and resumes oscillation when CPU wakes up.

IOSCITRM (0xA001) IOSC Coarse Trim Register R/W (0x01) TB Protected

	7	6	5	4	3	2	1	0
RD	SSC[3-0]				SSA[1-0]		ITRM[1-0]	
WR	SSC[3-0]				SSA[1-0]		ITRM[1-0]	

SSC[3-0] SSC[3-0] defines the spread spectrum sweep rate. If SSC[3-0] = 0000, then the spread spectrum is disabled.

SSA[1-0] SSA[1-0] defines the amplitude of spread spectrum frequency change. The frequency is changed by adding SSA[1-0] range to the actual IOSCVTRM[7-0].
SSA[1-0] = 11, +/- 32
SSA[1-0] = 10, +/- 16
SSA[1-0] = 01, +/- 8
SSA[1-0] = 00, +/- 4

ITRM[1-0] ITRM[1-0] is the coarse trimming of the IOSC.

IOSCVTRM (0xA002) IOSC Fine Trim Register R/W (0x80) TB Protected

	7	6	5	4	3	2	1	0
RD	IOSCVTRM[7-0]							
WR	IOSCVTRM[7-0]							

This register provides fine trimming of the IOSC frequency. The higher the value of IOSCVTRM, the lower the frequency is.

The manufacturer trim value is stored in IFB and is trimmed to 16MHz. The user program provides the freedom to set the IOSC at a preferred frequency as long as the program is able to calibrate the frequency. Once set, the IOSC frequency has an accuracy deviation within +/- 2% over the operating conditions. The following lists the range of the typical IOSC frequency for each trimming setting.

ITRM[1:0] = 2'b11, IOSC=27.4—36.8MHz

ITRM[1:0] = 2'b10, IOSC=25.5—34.3MHz

ITRM[1:0] = 2'b01, IOSC=14.1—19.2MHz

ITRM[1:0] = 2'b00, IOSC=12.2—16.5MHz

A hardware Spread Spectrum can be enabled for the IOSC. This is controlled by SSC[3-0]. When SSC[3-0] = 0, the spread spectrum is disabled, and IOSC functions normally as a fixed-frequency oscillator. If SSC[3-0] is not 0, then Spread Spectrum is enabled and IOSC frequency is swept according to the setting of SSC[3-0] and SSA[1-0]. The spread is achieved by varying the actual VTRM output to the oscillator circuit., and thus effectively changing the oscillation frequency. The effect of SSC[3-0] and SSA[1-0] is shown in the following graph.

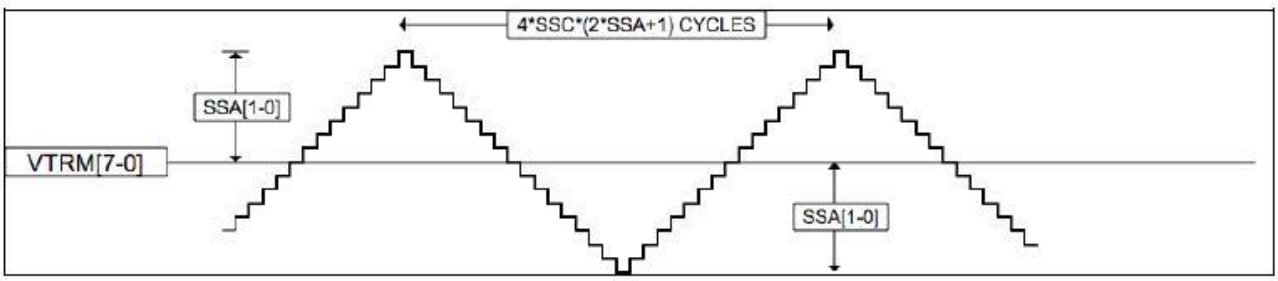

Figure 20-1 IOSC sweep rate and amplitude of Spread Spectrum

When Spread Spectrum is enabled, the actual controlling output to IOSC is VTRM[7-0] +/- SSA. This is shown in the graph above as the bold curve. The above example shows SSA[1:0] = 01, and the deviation is +/- 8. SSC[3-0] defines the update time in IOSC cycles. Then we can calculate the period of a complete sweep is 4 *

SSC * (2 * SSA+1) IOSC cycles, and we can obtain the sweep frequency from this period. When SS is enabled, the frequency of IOSC varies according to time and setting, and therefore the accuracy of IOSC frequency cannot be guaranteed. Please also note that VTRMOUT is VTRM[7-0] +/- SSA but is bounded by 0 and 255. Therefore, for a linear non-clipped sweep, VTRM[7-0] needs to be within the range of SSA ~ (256-SSA), for example, SSA[10] = 01, then SSA is 8. VTRM[7-0] should be in the range of 8 to 248 to prevent the sweep from being clipped. As Spread Spectrum suggests, the total EMI energy is not reduced, but the energy is spread over a wider frequency range. It is recommended that SS usage should be carefully evaluated and the setting of spread amplitude and the sweep frequency should be chosen carefully to reduce the EMI effect.

20.2 SOSC

An ultra-low power slow oscillator of 128KHz/256KHz is available as a wake-up or sleep mode system clock. SOSC is never powered down and consumes about 1uA from VDDC. SOSC frequency is temperature-dependent typically +/- 20% over the operating range. It can be trimmed using SOSCTRM register.

SOSCTRM (0xA007) SOSC Trim Register R/W (0x08) TB Protected

	7	6	5	4	3	2	1	0
RD	-			SOSCTRM[4]	SOSCTRM[3-0]			
WR	-	-		SOSCTRM[4]	SOSCTRM[3-0]			

SOSCTRM[4] 256KHz Select
If SOSCTRM[4] = 1, the SOSCH is centered at 256KHz. If it is 0, then it is centered at 128KHz. The default is 128KHz.

SOSCTRM[3-0] SOSC Trim Setting
These bits are used to fine-tune the oscillation frequency.
No matter SOSCTRM[4]'s value, the SOSC is typical 128KHz and SOSC32KHz is typical 32KHz.

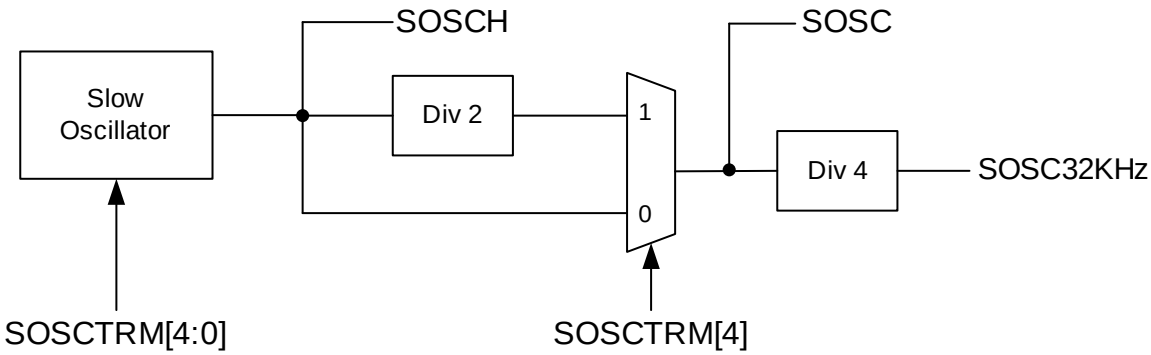

Figure 20-2 SOSC slow oscillator function block

20.3 Clock Output

The internal clock can be selected to output from GPIO.

CLKOUT (0xA006) Clock Out Control Register R/W (0x00)

	7	6	5	4	3	2	1	0
RD	CLKOEN	CLKSEL[1-0]		CLKDIV[4-0]				
WR	CLKOEN	CLKSEL[1-0]		CLKDIV[4-0]				

CLKOEN Clock out Enable
CLKOEN=0 will disable clock-out function.
CLKOEN=1 enables the divider.

CLKSEL[1-0] Clock Source Select
00 = SYSCLK
01 = IOSC
10 = SOSC32KHz
11 = PLL (reserved) same as SYSCLK
CLKOEN shall be disabled before updating CLKSEL to avoid the output glitch.

CLKDIV[5-0] Clock Divider
The clock output is Clock Source divided by (CLKDIV[4-0] + 1).

21. 12-Bit SAR ADC (ADC)

The on-chip ADC is a 12-bit SAR-based ADC with a maximum ADC clock rate of 4MHz (2.5V – 5V) or 1MHz (1.8V – 2.4V). The ADC uses VDDC (1.5V typical) as a full-scale reference. Typical ADC accuracy is about 9.5 bit to 10 bit at 1.5V reference with the input range between 0.2V to 1.5V. The ADC has four intrinsic channels. ADCHA and ADCHB are further connected to GPIO's analog I/O switches to expand multiplexed inputs. TPS is connected to an internal temperature sensor with a positive temperature coefficient. VPS is 1/5th of VDDH. When enabled, the ADC consumes about 1mA of current. The ADC also includes hardware to perform the resulting average. The average can be set to 1 to 8 times. ADC conversion can be software triggered or hardware triggered. Hardware trigger sources include Timer with Compare/Capture CC events, PWM Center, and Zero events.

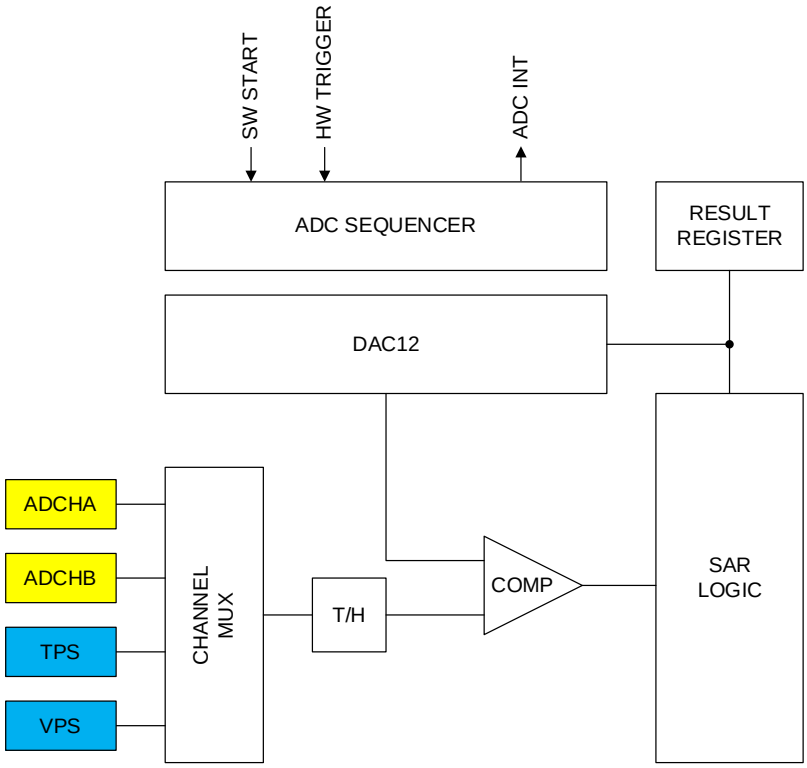

Figure 21-1 12-bit SAR ADC block diagram

ADCCFG (0xA9) ADC Configuration Register R/W (0x00)

	7	6	5	4	3	2	1	0
RD	ADCEN	ADCCS[2-0]			ADCFM	TRGTC	-	TRGPWM
WR	ADCEN	ADCCS[2-0]			ADCFM	TRGTC	-	TRGPWM

ADCEN ADC Enable bit

ADCEN=1 enables ADC.

ADCEN=0 puts ADC into power down mode.

When ADCEN is set from 0 to 1, the program needs to wait at least 20us to allow analog bias to stabilize to ensure ADC's proper functionality.

ADCCS[2-0] ADC Clock Divider

ADCCS[2-0]	ADC CLOCK
0	SYSCLK/2
1	SYSCLK/4
2	SYSCLK/8
3	SYSCLK/16
4	SYSCLK/32
5	SYSCLK/64
6	SYSCLK/128

ADCCS[2-0]	ADC CLOCK
7	SYSCLK/256

ADCFM ADC Result Format Control bit
ADCFM = 1 sets ADC result as MSB justified. ADCH contains the MSB bit of the result. ADCL[7-4] contains LSB results and ADCL[3-0] is filled with 0000.
ADCFM = 0 sets ADC result as LSB justified. ADCH[7-4] is filled with 0000. ADCH[3-0] contains the MSB result. ADCL contains the LSB results.

TRGTC TC CC Event Trigger Enable

TRGPWM PWM Center / Zero Event Trigger Enable

ADCCTLA (0xCE) ADC Control Register A R/W (0x00)

	7	6	5	4	3	2	1	0
RD	AVG[1-0]		CHSEL[1-0]		SHEN[1-0]		ADCINTE	BUSY
WR	AVG[1-0]		CHSEL[1-0]		SHEN[1-0]		ADCINTE	CSTART

AVG[1-0] AVG[2-0] controls the hardware averaging logic of ADC readout. It is recommended the setting is changed only when ADC is stopped. If multiple channels are enabled, then each channel is averaged in sequence. The default is 00.

AVG1	AVG0	ADC Result
0	0	1 Times Average
0	1	2 Times Average
1	0	4 Times Average
1	1	8 Times Average

CHSEL[1-0] ADC Channel Select

CHSEL[1]	CHSEL[0]	ADC Channel
0	0	ADCHA
0	1	ADCHB
1	0	Temperature
1	1	1/5 VDD

SHEN[1-0] Sample and Hold Enable

SHEN[1]	SHEN[0]	S/H Time
0	0	Pass Through
0	1	1 ADCCLK
1	0	2 ADCCLK
1	1	3 ADCCLK

BUSY ADC Status
BUSY is set to 1 by hardware when ADC is in conversion.

CSTART Software Start Conversion bit
Set CSTART=1 to trigger an ADC conversion on selected channels. This bit is self-cleared when the conversion is done.

ADCCTLB (0xB9) ADC Control Register B R/W (0x00)

	7	6	5	4	3	2	1	0
RD	-	ADCTCF	-	ADCPWMF	-	-	-	ADCIF
WR	-	ADCTCF	-	ADCPWMF	-	-	-	ADCIF

ADCTCF TC Trigger Completion Flag
ADCTCF is set by hardware after the triggering. The completion of the ADC conversion is indicated by ADCIF. It can be cleared by software and is forced to be cleared when ADCIF is cleared.

ADCPWMF PWM Trigger Completion Flag

	ADCPWMF is set by hardware after the triggering. The completion of the ADC conversion is indicated by ADCIF. It can be cleared by software and is forced to be cleared when ADCIF is cleared.
ADCIF	ADC Conversion Completion Interrupt Flag bit ADCIF is set by hardware when a conversion completes. If ADC interrupt is enabled, this also generates an interrupt. This bit must be cleared by software. Clearing ADCIF also clears all flags.

ADCL (0xBA) ADC Result Register Low Byte RO (0xXX)

	7	6	5	4	3	2	1	0
RD	ADCL[7-0]							
WR	-							

ADCH (0xBB) ADC Result Register High Byte RO (0xXX)

	7	6	5	4	3	2	1	0
RD	ADCH[7-0]							
WR	-							

If ADC is in conversion and another start or trigger is initiated, the result is undefined. Typically, the new start and trigger are ignored.

22. Analog Comparators (ACMP) and 8-bit DAC

There are four analog comparators as its on-chip external peripherals. When enabled, each comparator consumes about 250uA. The input signal range is from 0 to VDD. There are two 8-bit R-2R DAC associated with the comparators to generate the compare threshold. The R-2R DAC uses the internal 1.5V supply as the full-scale range, and thus limits the comparator threshold from 0V to 1.5V in 256 steps. Comparator A can select either VTH0 or VTH1 as the threshold. Comparator B/C/D can also select between VTH0 and the external threshold. VTH1 is also sent to a unity gain buffer as the DAC output. The buffer can supply or sink up to 150uA. Individual comparator when enabled consumes about 80uA/each, and the unity gain buffer consumes about 400uA/800uA under 3V/5V supply conditions.

The CPU can read the real-time outputs of the comparator directly through register access. The output is also sent to an edge detector and any edge transition can be used to trigger an interrupt. The stabilization time from off state to an enabled state of the comparator block is about 20usec. The block diagram of the analog comparator is shown in the following diagram.

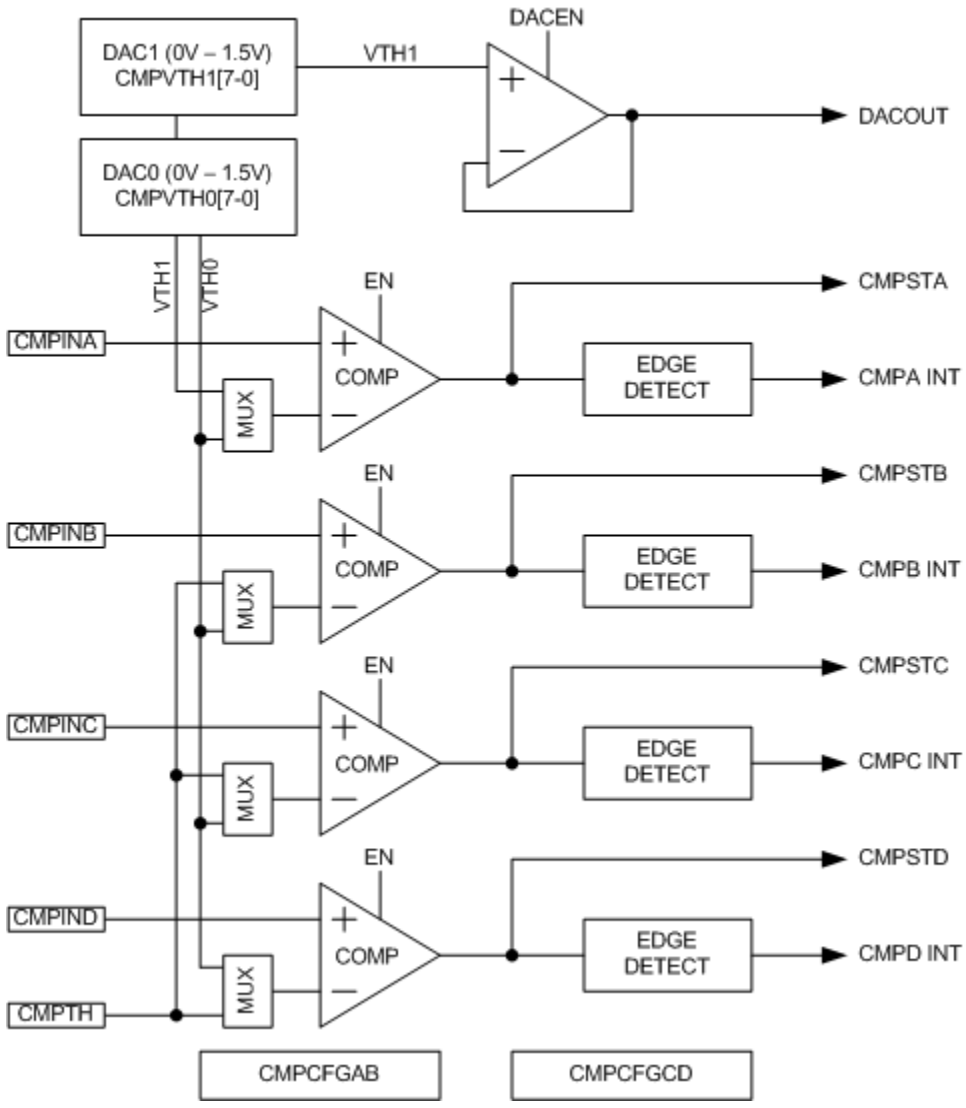

Figure 22-1 ACMP and 8-bit DAC block diagram

CMPCFGAB (0xA038) Analog Comparator A/B Configuration Register R/W (0x00)

	7	6	5	4	3	2	1	0
RD	CMPENA	THSELA	INTENA	POLA	CMPENB	THSELB	INTENB	POLB
WR	CMPENA	THSELA	INTENA	POLA	CMPENB	THSELB	INTENB	POLB

CMPENA — Comparator A Enable bit. Set to enable the comparator.
When CMPENA is set from 0 to 1, the program needs to wait at least 20us allowing analog bias to stabilize to ensure comparator A's proper functionality.

THSELA	Comparator A Threshold Select bit. THSELA = 0, the comparator A uses VTH0 as the threshold. THSELA = 1, the comparator A uses VTH1 as the threshold.
INTENA	Set to enable the comparator A's interrupt.
POLA	Channel A Output polarity control bit POLA=0 sets default polarity. POLA=1 reverses the output polarity of the comparator.
CMPENB	Comparator B Enable bit. Set to enable the comparator. When CMPENB is set from 0 to 1, the program needs to wait at least 20us allowing analog bias to stabilize to ensure comparator B's proper functionality.
THSELB	Comparator B Threshold Select Bit. THSELB = 0, the comparator B uses VTH0 as the threshold. THSELB = 1, the comparator B uses an external threshold.
INTENB	Set to enable the comparator B's interrupt.
POLB	Channel B Output polarity control bit POLB=0 sets default polarity. POLB=1 reverses the output polarity of the comparator.

CMPCFGCD (0xA039) Analog Comparator C/D Configuration Register R/W (0x00)

	7	6	5	4	3	2	1	0
RD	CMPENC	THSELC	INTENC	POLC	CMPEND	THSELD	INTEND	POLD
WR	CMPENC	THSELC	INTENC	POLC	CMPEND	THSELD	INTEND	POLD

CMPENC	Comparator C Enable Bit. Set to enable the comparator. When CMPENC is set from 0 to 1, the program needs to wait at least 20us to allow analog bias to stabilize to ensure comparator C's proper functionality.
THSELC	Comparator C Threshold Select Bit. THSELC = 0, the comparator C uses VTH0 as the threshold. THSELC = 1, the comparator C uses external threshold.
INTENC	Set to enable the comparator C interrupt.
POLC	Channel C Output polarity control bit POLC=0 sets default polarity. POLC=1 reverses the output polarity of the comparator.
CMPEND	Comparator D Enable Bit. Set to enable the comparator. When CMPEND is set from 0 to 1, the program needs to wait at least 20us to allow analog bias to stabilize to ensure comparator D's proper functionality.
THSELD	Comparator D Threshold Select Bit. THSELD = 0, the comparator D uses VTH0 as the threshold. THSELD = 1, the comparator D uses an external threshold.
INTEND	Set to enable the comparator D interrupt.
POLD	Channel D Output polarity control bit POLD=0 sets default polarity. POLD=1 reverses the output polarity of the comparator.

CMPVTH0 (0xA03A) Analog Comparator Threshold Control Register R/W (0x00)

	7	6	5	4	3	2	1	0
RD	VTH0 Register							
WR	VTH0 Register							

CMPVTH0 register controls the comparator threshold VTH0 through an 8-bit DAC. When set to 0x00, the threshold is 0V. When set to 0xFF, the threshold is 1.5V. When not used, it should be set to 0x00 to save power consumption.

CMPVTH1 (0xA03B) Analog Comparator Threshold Control Register R/W (0x00)

	7	6	5	4	3	2	1	0
RD	VTH1 Register							
WR	VTH1 Register							

CMPVTH1 register controls the comparator threshold VTH1 through 8-bit DAC. When set to 0x00, the threshold is 0V. When set to 0xFF, the threshold is1.5V. When not used, it should be set to 0x00 to save power consumption. VTH1's DAC level is also used for DAC voltage output.

CMPST (0xA03D) Analog Comparator Status Register R/W (0x00)

	7	6	5	4	3	2	1	0
RD	CMPIFD	CMPIFC	CMPIFB	CMPIFA	CMPSTD	CMPSTC	CMPSTB	CMPSTA
WR	CMPIFD	CMPIFC	CMPIFB	CMPIFA	FILEND	FILENC	FILENB	FILENA

CMPIFD	Comparator D Interrupt Flag bit. This bit is set when CMPSTD is toggled and the comparator D setting is enabled. This bit must be cleared by software.
CMPIFC	Comparator C Interrupt Flag bit. This bit is set when CMPSTC is toggled and the comparator C setting is enabled. This bit must be cleared by software.
CMPIFB	Comparator B Interrupt Flag bit. This bit is set when CMPSTB is toggled and the comparator B setting is enabled. This bit must be cleared by software.
CMPIFA	Comparator A Interrupt Flag bit. This bit is set when CMPSTA is toggled and the comparator A setting is enabled. This bit must be cleared by software.
CMPSTD	Comparator D Real-time Output. If the comparator is disabled, this bit is forced to low.
CMPSTC	Comparator C Real-time Output. If the comparator is disabled, this bit is forced to low.
CMPSTB	Comparator B Real-time Output. If the comparator is disabled, this bit is forced to low.
CMPSTA	Comparator A Real-time Output. If the comparator is disabled, this bit is forced to low.
FILEND	Comparator D Digital Filter Enable. Filter is 16 SYSCLK.
FILENC	Comparator C Digital Filter Enable. Filter is 16 SYSCLK.
FILENB	Comparator B Digital Filter Enable. Filter is 16 SYSCLK.
FILENA	Comparator A Digital Filter Enable. Filter is 16 SYSCLK.

DACCFG (0xA03C) Analog Comparator Status Register R/W (0x00)

	7	6	5	4	3	2	1	0
RD	DACEN	VDDCCMPA	DACTEST	-	CMPHYSD	CMPHYSC	CMPHYSB	CMPHYSA
WR	DACEN	VDDCCMPA	DACTEST	-	CMPHYSD	CMPHYSC	CMPHYSB	CMPHYSA

DACEN	DAC Enable DACEN=1 turns on the DAC output buffer. DACEN=0 turns off the DAC output buffer.
VDDCCMPA	Force CMPINA as VDDC. Set VDDCCMPA=1 to connect CMPINA to VDDC. This is for testing purpose only. By connecting VDDC to CMPINA and GPIO ANIO switch, VDDC is exposed on GPIO pin so testing and trimming of VDDC can be done.
DACTEST	DAC/ADC Test Mode DACTEST=1 connect DACOUT to ADC's ADCHB input internally. This needs software to perform DAC output and ADC conversion.
CMPHYSD	Comparator D Hysteresis Disable CMPHYSD = 0 disables the hysteresis of Comparator D CMPHYSD = 1 enables the hysteresis (typical 10mV) of Comparator D.
CMPHYSC	Comparator C Hysteresis Disable CMPHYSC = 0 disables the hysteresis of Comparator C CMPHYSC = 1 enables the hysteresis (typical 10mV) of Comparator C.
CMPHYSB	Comparator B Hysteresis Disable CMPHYSB = 0 disables the hysteresis of Comparator B CMPHYSB = 1 enables the hysteresis (typical 10mV) of Comparator B.
CMPHYSA	Comparator A Hysteresis Disable CMPHYSA = 0 disables the hysteresis of Comparator A CMPHYSA = 1 enables the hysteresis (typical 10mV) of Comparator A.

23. Touch Key Control III

TK3 is an enhanced TK2 implementation with differential dual slope operations. The capacitance to time conversion goes through two phases of charge transfer: One is charging up and the other one is discharging down using two thresholds equally spaced from ½ VDDC. Each charge transfer is obtained by subtraction of charge on internal reference capacitance and key capacitance. The difference of charge/discharge counting behavior is used to determine the key capacitance change in the ratio of internal capacitance. Better noise immunity from power, ground, and common-mode is achieved by dual-slope operation. Better S/N can also be achieved because the only differential charge is used for the transfer, and the internal capacitance exhibits better temperature and environmental stability making the conversion result less sensitive to these changes.

CREF, the integration capacitor of the charge transfer, is connected to P17 through ANIO multiplexer and CKEY is connected to other GPIO through multiplexer. A replica signal of CKEY is provided through a buffer and routed out as SHIELD through GPIO. The shield signal can be used to cancel the mutual capacitance effect from the neighboring signal trace of the detected key and provides better noise immunity against moisture or water.

To detect if a key is pressed, the duty count value TKLDT[15-0] or TKHDT[15-0] can be processed by software and compared with an average non-pressing duty count. The hardware can also be configured to auto-repeat accumulations of the duty cycle count to filter the sporadic noise effect. Since the comparator output should be a random duty with an average equal to the capacitance ratio, for low-frequency noise rejection, the hardware can be set to reject a continuous high or low comparator output that exceeds long durations. For high-frequency noise rejection, the hardware includes a pseudo-random sequence that randomizes the timing sequences of charge and discharge. A slow-moving average of the duty count value is stored in TKBASE[15-0] and software can use this for baseline calculation to auto compensate for environmental change.

Issuing a START command in the TK3CFGD register starts a conversion sequence that accumulates the comparator output into a count value. The count value and the total number of the cycle of the sequence can then be calculated to obtain the capacitance of the key. The timing diagram of the TK3 in normal operation is shown in the following diagram. CREF is first equalized to VREFX which is in close range of VREF. When a START command is issued, the first few edges of the comparator output are ignored to avoid any noise caused by the VREFX switching. And then the comparator output is accumulated into DTYL and DTYH registers. A sequence can consist of several conversion cycles depending on the RPT setting, and DTYL and DTYH maintain accumulation to obtain higher resolutions. After the sequence is completed, CREF is also connected to VREFX to stay ready for the next sequence to start.

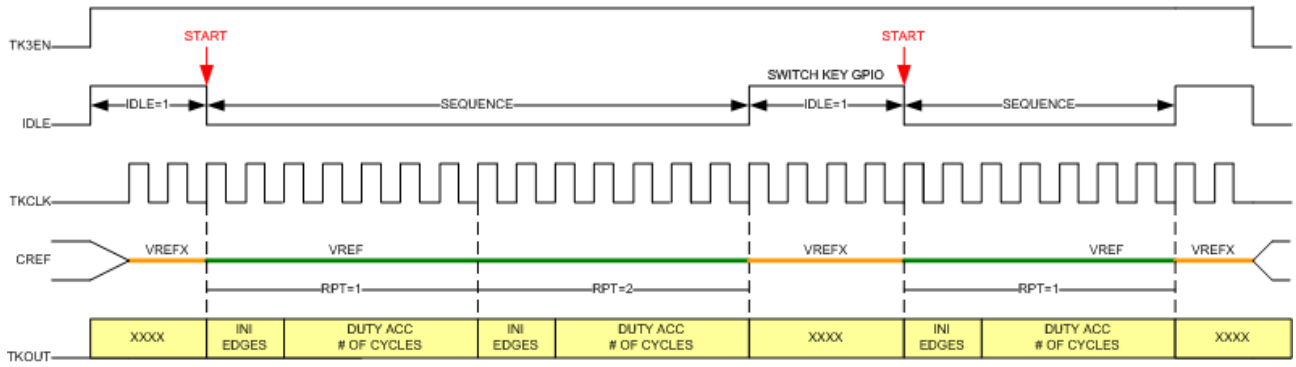

Figure 23-1 TK3 signals timing diagram

TK3 can be set into low power auto-detect mode by setting AUTO bit in TK3CFGA. In this mode, an ultra-low power comparator is used and the clock for TK3 should be set to SOSCH. This mode can be used specifically for touch key wakeup during the MCU sleep mode. The total power consumption of TK3 in this mode is less than 20uA. A threshold register can be set to determine the auto-detect threshold either in absolute value or relative value versus the slow-moving baseline value. When the duty count value exceeds the threshold value, a wakeup and an interrupt are generated to CPU. The timing diagram for auto mode detection and entering into SLEEP mode is shown in the following diagram. Note the actual start of the sequence is delayed by AUTO START DELAY setting. This allows the internal VDDC to stabilize from switching normal mode to sleep mode supply regulators.

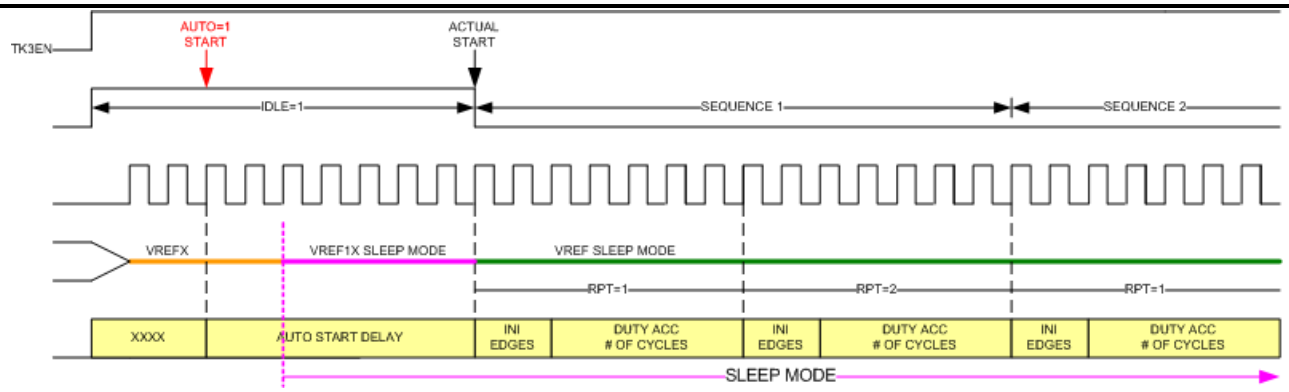

Figure 23-2 Timing diagram of Auto Detection in Sleep mode

TK3CFGA (0xA018) TK3 Configuration Register A R/W (0x00)

	7	6	5	4	3	2	1	0
RD	TK3EN	CMPHYS[1-0]		REFSEL	SHIELDEN	TKIEN	TKLPM	AUTO
WR	TK3EN	CMPHYS[1-0]		REFSEL	SHIELDEN	TKIEN	TKLPM	AUTO

TK3EN — TK3 Enable
TK3EN=0 disables the TK3 circuits and clears all states.
TK3EN=1 for TK3 normal operations.

CMPHYS[1-0] — Comparator Hysteresis Enable
00 = +30mv hysteresis
01 = +20mv hysteresis
10 = -10mv hysteresis
11 = -40mv hysteresis

REFSEL — TK Reference Level Select
REFSEL=0 uses 1/2 VDDC as a reference
REFSEL=1 uses 2/3 VDDC as a reference

SHIELDEN — Shield Output Buffer Enable
SHIELDEN=1 enables the shield signal buffer. The buffer consumes about 200uA when enabled.

TKIEN — TK3 Interrupt Enable
TKIEN=1 enables the TK3 interrupt. TK3 interrupt is generated when a counting sequence is completed (including the repeat count if RPT[1-0] is not 00). Interrupt and wakeup is also generated when TKIEN = 1 and AUTO = 1 after the auto-detection threshold is met.
When TK3 interrupt is generated, TKIF is also set to 1 by hardware.

TKLPM — TK3 Low Power Mode
TKLPM=0 for normal mode operations.
TKLPM=1 put the comparator into ultra-low power mode and should be used in auto wakeup power saving mode. In this mode, TKCLK should use SOSCH/4 clock.

AUTO — Auto Wake Up Mode
AUTO=1 enables auto detect mode. In auto mode, the current duty count register value is compared with baseline plus threshold (either absolute or relative). If duty count value is higher than the threshold value, then an interrupt and a wakeup are generated.
AUTO=0 enables normal detect mode. In normal mode, writing START with “1” initiates a conversion sequence, and when the duty count is obtained, an interrupt is generated.

TK3CFGB (0xA019) TK3 Configuration Register B R/W (0x00)

	7	6	5	4	3	2	1	0
RD	RPT[1-0]		INI[1-0]		ASTDLY[1-0]		LFNF[1-0]	
WR	RPT[1-0]		INI[1-0]		ASTDLY[1-0]		LFNF[1-0]	

RPT[1-0] — Repeat Sequence Count
00 = No Repeat

01 = 4 times
10 = 8 times
11 = 16 times

INI[1-0] Initial Settling Delay
INI[1-0] defines the number of TKCLK periods for the initial settling of CREF. The delay is set to (INI[1-0] + 1) * 4 * TKCLK.

ASTDLY[1-0] Auto Mode Start Delay
STDLY[1-0] inserts an inter-sequence idle time of (ASTDLY[1-0] + 1) * 256 TKCLK at each sequence start. This delay allows the stabilization time of VREFX from normal mode to sleep mode.

LFNF[1-0] Low-Frequency Noise Filter Setting
00 = disables LFNF
Noise injection longer than LFNF[1-0] * 8 times is ignored.
Please note: In the presence of such noise, the cycle count still continues. The end result is that the sum of DUTYL and DUTYH will not equal to cycle count.

TK3CFGC (0xA01A) TK3 Configuration Registers C R/W (0x00)

	7	6	5	4	3	2	1	0
RD	SLOW[1-0]		CYCLE[2-0]			BASEINI	THDSEL	AUTOLFEN
WR	SLOW[1-0]		CYCLE[2-0]			BASEINI	THDSEL	AUTOLFEN

SLOW[1-0] Baseline Slow Moving Average setting
00 = 32 average
01 = 64 average
10 = 128 average
11 = 256 average
The duty value is averaged by SLOW[1-0] conversion and updated to BASELINE register through moving average.

CYCLE[2-0] Cycle Count of each conversion sequence
000 = 1024
001 = 2048
010 = 4096
011 = 8192
100 = 12288
101 = 16384
110 = 32768
111 = 65536
The cycle count is each sequence cycle count. And it is repeated if RPT is not 0.
Please note that the conversion always ends with the defined cycle count.

BASEINI Baseline Initial Value
If BASEINI = 1, then the first DTYL count after entering auto mode is loaded to the BASELINE register as its initial value to start moving average.
If BASEINI = 0, then the value written in BASELINE before entering auto mode is used as the initial value to start moving average.

THDSEL Threshold Value Setting
THDSEL = 0 uses TKTHD[15-0] as the threshold to compare with DTYL to generate the interrupt and wakeup
THDSEL = 1 uses TKTHD[15-0] + TKBASE[15-0] as the threshold.

AUTOLFEN Low-Frequency Noise Filtering in Auto mode
If AUTOLFEN = 0, then low-frequency noise filtering in auto mode is disabled.
If AUTOLFEN = 1, then low-frequency noise filtering in auto mode is enabled.
The low noise filtering status flag is still valid regardless of AUTOLFEN setting. Software can determine if the current conversion result needs to be discarded by checking LFNF flag.

TK3CFGD (0xA01B) TK3 Configuration Registers D R/W (0x00)

	7	6	5	4	3	2	1	0
RD	CCHG[2-0]			ASTDLYEN	PSRDEN	LFNF	TKIF	BUSY
WR	CCHG[2-0]			ASTDLYEN	PSRDEN	LFNF	TKIF	START

CCHG[2-0] Charge Capacitance Select
000 = 10pF
001 = 20pF
010 = 30pF
011 = 40pF
100 = 50pF
101 = 60pF
110 = 70pF
111 = 80pF

ASTDLYEN Auto Start Delay Enable
ASTDLYEN = 1 enables ASTDLY[1-0] delay start for auto mode.
ASTDLYEN = 0 disables ASTDLY[1-0] delay.

PSRDEN Pseudo Random Sequence Enable
PSRDEN = 1 enables the random sequence in conversion
PSRDEN = 0 disables

LFNF Low-Frequency Noise Detection Flag
LFNF is set by hardware if in the present conversion a Low-Frequency Noise is detected. LFNF needs to be cleared to “0” by software

TKIF TK3 Interrupt Flag
TKIF is set by hardware when a TK3 interrupt occurred by either conversion sequence completed or a valid detection in auto mode. TKIF needs to be cleared to “0” by software.

START Start Conversion
Writing “1” into START initiates the conversion sequence. It is cleared by hardware when conversion is complete. Please note that writing AUTO “1” also starts the conversion in auto mode.

BUSY Conversion Status
BUSY is set to 1 by hardware and it indicates the conversion sequences are still running.

TK3CFGE (0xA00C) TK3 Configuration Register E R/W (0x00)

	7	6	5	4	3	2	1	0
RD	-				TKCS[3-0]			
WR	-				TKCS[3-0]			

TKCS[3-0] TK3 Clock Select
TKCS[3-0] = 0000 SYSCLK/2
TKCS[3-0] = 0001 SYSCLK/4
TKCS[3-0] = 0010 SYSCLK/6
TKCS[3-0] = 0011 SYSCLK/8
TKCS[3-0] = 0100 SYSCLK/10
TKCS[3-0] = 0101 SYSCLK/16
TKCS[3-0] = 0110 SYSCLK/32
TKCS[3-0] = 0111 SYSCLK/64
TKCS[3-0] = 1000 SYSCLK/128
TKCS[3-0] = 1001 SYSCLK/256
TKCS[3-0] = 1110 SOSCH/2
TKCS[3-0] = 1111 SOSCH/4
TKCS[3-0] = Other Reserved
SOSCH/2 should be used for sleep mode auto wakeup.

TK3HDTYL (0xA01C) TK3 High Duty Count Register L RO (0x00)

	7	6	5	4	3	2	1	0
RD	TK3HDTY[7-0]							
WR	-							

TK3HDTYH (0xA01D) TK3 High Duty Count Register H RO (0x00)

	7	6	5	4	3	2	1	0
RD		TK3HDTY[15-8]						
WR		-						

TK3LDTYL (0xA01E) TK3 Low Duty Count Register L RO (0x00)

	7	6	5	4	3	2	1	0
RD	TK3LDTY[7-0]							
WR	-							

TK3LDTYH (0xA01F) TK3 Low Duty Count Register H RO (0x00)

	7	6	5	4	3	2	1	0
RD	TK3LDTY[15-8]							
WR	-							

TK3BASEL (0xA028) TK3 Baseline Register L R/W (0x00)

	7	6	5	4	3	2	1	0
RD	TK3BASE[7-0]							
WR	TK3BASE[7-0]							

TK3BASEH (0xA029) TK3 Baseline Register H R/W (0x00)

	7	6	5	4	3	2	1	0
RD	TK3BASE[15-8]							
WR	TK3BASE[15-8]							

TK3THDL (0xA02A) TK3 Threshold Register L R/W (0x00)

	7	6	5	4	3	2	1	0
RD	TK3THD[7-0]							
WR	TK3THD[7-0]							

TK3THDH (0xA02B) TK3 Threshold Register H R/W (0x00)

	7	6	5	4	3	2	1	0
RD	TK3THD[15-8]							
WR	TK3THD[15-8]							

TK3PU (0xA02C) TK3 DC Pull-Up Control Register R/W (0x00)

	7	6	5	4	3	2	1	0
RD	PUIEN	PUREN	-	-	PU[3-0]			
WR	PUIEN	PUREN	-	-	PU[3-0]			

TK3PU is to configure a constant DC pull-up on CREF to allow high capacitance touch-key detection. ADC pull-up can compensate the equivalent resistance caused by a high capacitance key. Connecting a switching current source or resistor can thus maintain touch key detection sensitivity.

PUIEN	Pull-up DC Current Enable
PUREN	Pull-up DC Resistor Enable
PU[3-0]	Pull-up Selection

For DC current, PU[3-0] enables 8uA/4uA/2uA/1uA current source.
For Resistor, PU[3-0] enables 5K/10K/20K/40K resistor.

24. Active Proximity Sensor

The active proximity sensor uses mutual capacitance sensing by driving a transmit electrode and sensing the electric field change at the receive electrode. This is shown as the following illustrations.

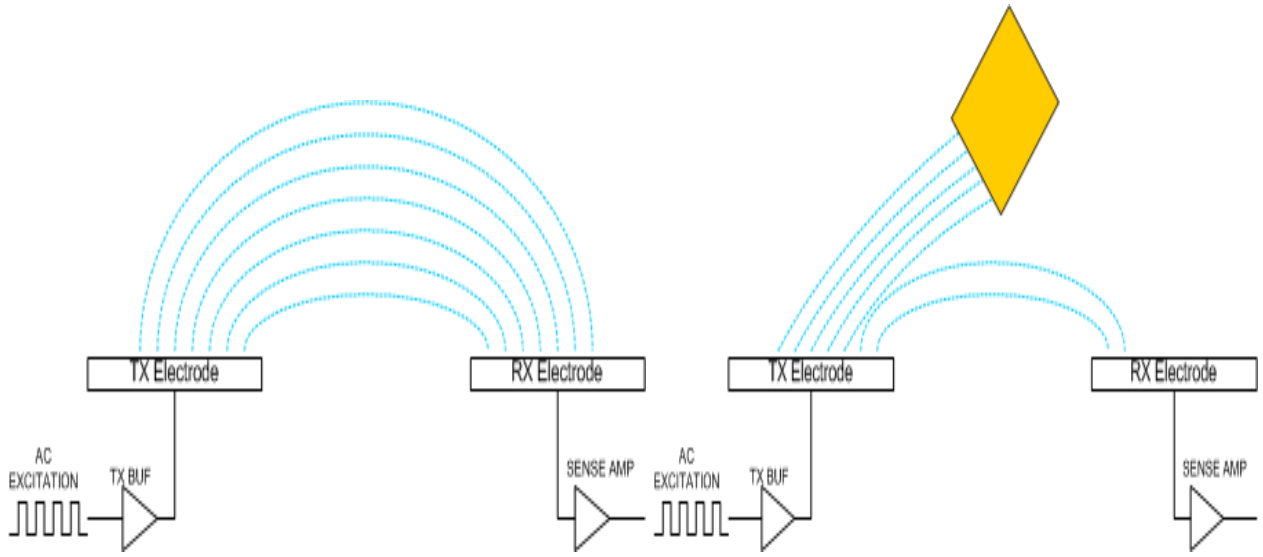

Figure 24-1 Active Proximity Sensor Illustration

On the left, an AC excitation voltage is driving the TX electrode and leads to an electric field established between the TX electrode and the RX electrode. When a mass-conductive object such as finger approaches, the flux lines between the electrodes get disturbed. Using a charge sense amplifier, the change of flux lines can be amplified and thus accomplishes proximity sensing. In the diagram, we can see that if the distance between TX and RX electrodes is farther, then the detection of proximity can be at a longer range. We can also see that a larger amplitude of TX output can lead to easier proximity detection.

The proximity sensor is tightly coupled with the Touch Key controller. It consists of an excitation waveform generator, and a synchronous charge amplifier followed by a programmable amplifier as the sense amplifier. The output of the sense amplifier is connected as an input to the Touch Key Controller and the TK controller is used to detect the change of sense amplifier output as proximity detections. A typical excitation signal operates at a frequency between 64KHz to 128KHz. Since Proximity Sensor (PS) is at the same clock domain as the TK controller, setting TK clock will determine the excitation frequency. Typically, it should use SOSCH/2 for TK clock.

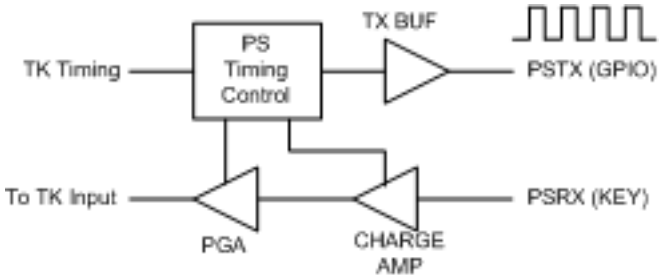

Figure 24-2 Proximity Sensing Operation

Please note that the output PSTX is routed to externally through the multi-function selection of the GPIO. Hence any GPIO pin can be used for PSTX purposes. The input PSRX keys share the ANIO multiplexer used for TK's shield output. When PS is enabled, TK's shield function must be disabled.

APSCFGA (0xA008) Active Proximity Sensor Configuration Register A R/W (0x00)

	7	6	5	4	3	2	1	0
RD	APSEN	RXCAL[6-0]						
WR	APSEN	RXCAL[6-0]						

APSEN — Active PS Enable
APSEN=1 enables the APS. If APS is enabled, the TK controller is connected to PS output.

RXCAL[7-0] — Receive Electrode Capacitance Calibration

RXCAL is used to adjust the cancellation of the parasitic capacitance on RX electrode. Each bit controls one of the binary-weighted capacitance arrays.
RXCAL[0] = 1, 32fF
RXCAL[1] = 1, 64fF
RXCAL[2] = 1, 128fF
RXCAL[3] = 1, 256fF
RXCAL[4] = 1, 512fF
RXCAL[5] = 1, 1024fF
RXCAL[6] = 1, 2048fF
The range is 32fF to 4pF.

APSCFGB (0xA009) Active Proximity Sensor Configuration Register B R/W (0x78)

	7	6	5	4	3	2	1	0
RD	CREFSEL[3-0]				CAGAIN[3-0]			
WR	CREFSEL[3-0]				CAGAIN[3-0]			

CREFSEL[3-0] Output Charge Capacitance Setting
This is equivalent of CCHG setting of TK controller. And the bottom equivalent key capacitance is 400fF.
Each bit of CREFSEL[3-0] selects a binary weighted capacitor array.
CREFSET[0] = 1, 64fF
CREFSET[1] = 1, 128fF
CREFSET[2] = 1, 256fF
CREFSET[3] = 1, 512fF
CREFSET[3-0]=0000 is not allowed.
Ideally, CREF should be set to between 400fF to 800fF.

CAGAIN[3-0] Charge Amplifier Gain Setting
Charge Amplifier is always enabled when PS is enabled
Each bit of CAGAIN[3-0] selects a binary weighted capacitor array for the feedback capacitor of the charge amplifier. The ratio of the mutual capacitance between TX/RX electrodes and the feedback capacitor can decide the gain of the charge amplifier. The smaller the feedback capacitance, the higher the gain. However, noise is higher too.
CAGAIN[0] = 1, 64fF
CAGAIN[1] = 1, 128fF
CAGAIN[2] = 1, 256fF
CAGAIN[3] = 1, 512fF
The range is from 64fF to 960fF.

APSCFGC (0xA00A) Active Proximity Sensor Configuration Register C R/W (0x27)

	7	6	5	4	3	2	1	0
RD	PGAEN	PC[2-0]			PGASET[3-0]			
WR	PGAEN	PC[2-0]			PGASET[3-0]			

PGAEN Set to enable PGA circuit.

PC[2-0] Power Control Setting
PC[2-0] sets the power consumption of the charge amplifier and PGA. Each bit turns on one of the binary-weighted current sources. The higher the setting results, the higher power and faster speed when parasitic receive capacitance is high which requires a faster settling time of the amplifiers.
PC[0] = 1, 0.4uA
PC[1] = 1, 0.8uA
PC[2] = 1, 1.6uA
PC[2-0] = 000 is not allowed.

PGASET[3-0] PGA Gain Setting
GAIN = 8 / (4 * PGASET[3] + 2 * PGASET[2] + PGASET[1] + PGASET[0])
Maximum gain is 8 when PGASET[3-0]=0001 or 0010.
Minimum gain is 1 when PGASET[3-0]=1111
PGASET[3-0] = 0000 is not allowed.

APSCFGD (0xA00B) Active Proximity Sensor Configuration Register D R/W (0x07)

	7	6	5	4	3	2	1	0
RD	-				PSLOAD[3-0]			
WR	-				PSLOAD[3-0]			

PSLOAD[3-0] Output Load Setting

This set is the pseudo load of TK controller. This load is only active when APSEN = 1.

PSLOAD[0] = 1, 115fF
PSLOAD[1] = 1, 230fF
PSLOAD[2] = 1, 460fF
PSLOAD[3] = 1, 920fF

25. GPIO Multi-Function Select and Pin Interrupt

Each IO pin has a configurable IO buffer that can meet various interface requirements. The GPIO pins can be configured as an external pin interrupt input or for wakeup purposes. Each port has edge detection logic and a latch for rising and falling edge detections. During hardware reset and after, the IO buffer is put in a high impedance state with all drives disabled.

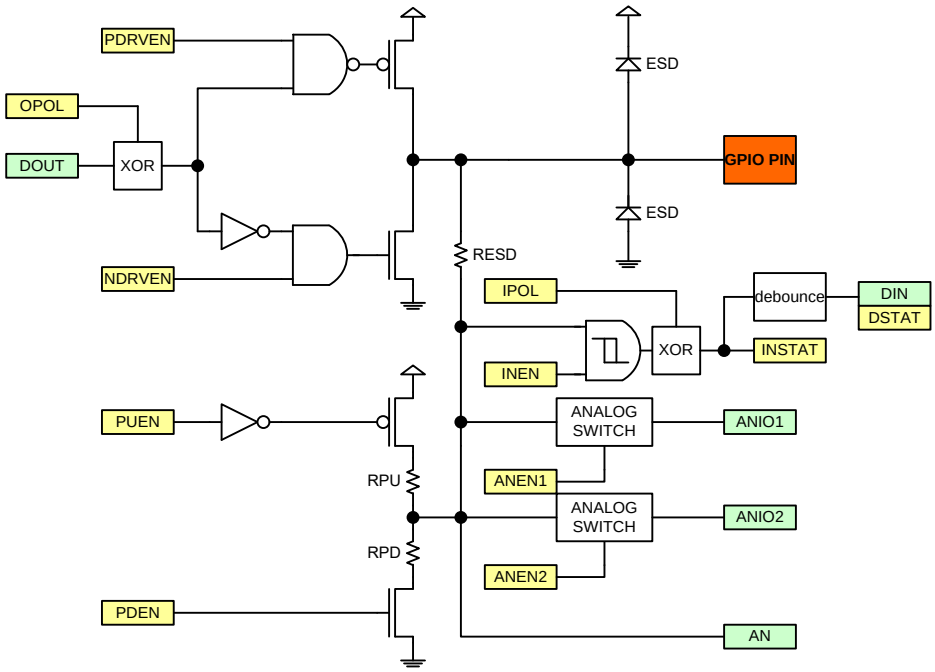

Figure 25-1 GPIO Multi-Function Select and Pin Interrupt

IOCFGO (0xA100 – 0xA10F) IO Buffer Output Configuration Registers R/W (0x00)

	7	6	5	4	3	2	1	0
RD	IPOL	PDRVEN	NDRVEN	OPOL	ANEN2	ANEN1	PUEN	PDEN
WR	IPOL	PDRVEN	NDRVEN	OPOL	ANEN2	ANEN1	PUEN	PDEN

IPOL — Input Polarity
IPOL=1 reverses the input logic. IPOL=0 is for normal logic polarity.

PDRVEN — Output PMOS driver enable. Set this bit to enable the PMOS of the output driver. DISABLE is the default value.

NDRVEN — Output NMOS driver enable. Set this bit to enable the NMOS of the output driver. DISABLE is the default value.

OPOL — Output Polarity Control
Output buffer data polarity control

ANEN2 — Analog MUX 2 enables control. Set this bit to connect the pin to the internal analog peripheral ANIO2. DISABLE is the default value.

ANEN1 — Analog MUX 1 enables control. Set this bit to connect the pin to the internal analog peripheral ANIO1. DISABLE is the default value.

PUEN — Pull-up resistor control. Set this bit to enable a pull-up resistor connection to the pin. The pull-up resistor is approximately 6K Ohm. DISABLE is the default value.

PDEN — Pull down resistor control. Set this bit to enable pull-down resistor connection to the pin. The pull-down resistor is approximately 6K Ohm. DISABLE is the default value.

IOCFGI (0xA110 – 0xA11F) IO Buffer Input Configuration Registers R/W (0x00)

	7	6	5	4	3	2	1	0
RD	PI1EN	PI0EN	RIF	FIF	INEN	OERRF	DSTAT	INSTAT
WR	PI1EN	PI0EN	RIEN	FIEN	INEN	OERREN	DBN[1-0]	

PI1EN — Pin Interrupt 1 Enable

PI0EN — Pin Interrupt 0 Enable

RIEN — Rising Edge Pin Interrupt Enable

RIF	Rising Edge Pin Interrupt Flag RIF is set to 1 by hardware after either a PI1 or PI0 rising edge interrupt has occurred. RIF must be cleared by software writing RIEN with “0”. RIEN needs to be enabled if the next rising edge interrupt is required.
FIEN	Falling Edge Pin Interrupt Enable
FIF	Falling Edge Pin Interrupt Flag FIF is set to 1 by hardware after either a PI1 or PI0 falling edge interrupt has occurred. FIF must be cleared by software writing FIEN with “0”. FIEN needs to be enabled if the next falling edge interrupt is required.
INEN	Input Buffer Enable INEN=1 enables the input buffer. INEN=0 disables the input buffer. In the disabled state, the output of the input buffer is logic 0. If the input is floating or not solid 0 and 1 voltage level, DC current may flow in the input buffer. Disabling the input buffer can remove DC leakage of the input buffer due to this reason.
OERREN	Output Error Interrupt Enable OERREN=1 enables output error detection and interrupt. The output value is compared with the input value sampled after three SYSCLK delays. The comparison is performed whenever the output value changes. And a mismatch will generate an interrupt with OERRF set. Either PI1 or PI0 must also be enabled for the interrupt to be valid, otherwise, only the flag OERRF is set to 1 for a mismatch. OERREN=0 disables the output error detection. OERREN=0 also clears OERRF to 0.
OERRF	Output Error Flag
DSTAT	Real Time Status after De-bounce. DSTAT is read-only. Please note that the de-bounced input is used for generating interrupts, as well as all other multi-function inputs including PORT registers. The non-debounced input can only be read through INSTAT bit.
INSTAT	Real Time Status of Input Buffer. INSTAT is read-only.
DBN[1-0]	De-Bounce Time Setting 00 – OFF 01 – 4 SOSC32KHz (125usec) 10 – 16 SOSC32KHz (500usec) 11 – 64 SOSC32KHz (2msec)

MFCFG (0xA120 – 0x A12F) Port Multi-Function Configuration Registers R/W (0x00)

	7	6	5	4	3	2	1	0
RD	MFCFG[7-0]							
WR	MFCFG[7-0]							

Please see PIN OUT section for description of each port multi-function selection.

26. Information Block IFB

There are two IFB blocks and each contains 128x16 bit information. The address 0x000 to 0x03F in the first IFB is used to store manufacturer information. Address 0x040 is for boot code wait time, and 0x041 to 0x043 are used for boot code. The first IFB can be erased only in Writer Mode and can be written using Flash Controller for addresses beyond 0x40. This is to protect any alteration of the manufacturer and calibration data. The 2nd IFB is open for erase/write for user access. The following table shows the contents of the first IFB for the manufacturer data. Please note that these are in lower LSB bytes. The upper MSB byte contains its corresponding ECC code.

Address	Type	Description
0x00 - 0x01	M	IFB Version
0x02 - 0x07	M	Product Name
0x08 - 0x09	M	Package and Product Code
0x0A- 0x0B	M	Product Version and Revision
0x0C	M	Flash Memory Size
0x0D	M	SRAM Size
0x0E -0x0F	M	Customer Specific Code
0x10	M	CP1 Information
0x11	M	CP2 Information
0x12	M	CP3 Version
0x13	M	CP3 BIN
0x14	M	FT Version
0x15	M	FT BIN
0x16 -0x1B	M	Last Test Date
0x1C -0x1D	M	Boot Code Version
0x1E	M	Boot Code Segment
0x1F	M	Checksum for 0x00 – 0x1E
0x20	M	REGTRM value for 1.5V
0x21	M	IOSC ITRM value for 16MHz @5V
0x22	M	IOSC VTRM value for 16MHz @5V
0x23	M	LVDTHD value for detection of 4.0V
0x24	M	LVDTHD value for detection of 3.0V
0x25	M	IOSC ITRM value for 32MHz @5V
0x26	M	IOSC VTRM value for 32MHz @5V
0x27	M	IOSC ITRM value for 16MHz @3V
0x28	M	IOSC VTRM value for 16MHz @3V
0x29	M	IOSC ITRM value for 32MHz @3V
0x2A	M	IOSC VTRM value for 32MHz @3V
0x2B -0x2C	M	Temperature Offset LSB/MSB
0x2D	M	Temperature Coefficient
0x2E -0x2F	M	Internal Reference LSB/MSB
0x30	M	SOSC 128KHz Trim
0x31	M	SOSC 256KHz Trim
0x32- 0x33	M	Reserved
0x34	M	Timer 0 High TRIM *

Address	Type	Description
0x35	M	Timer 0 Low TRIM *
0x36 -0x38	M	Reserved
0x039	M	Checksum for 0x20 – 0x39
0x3A -0x3F	M	Retention Value
0x40	M/U	Boot Code Wait Time. Boot code uses this byte to determine the ISP wait time. This wait time is necessary for a stable ISP. After the user program is downloaded, the wait time can be reduced to minimize power-on time. Each “1” in bit [1-0] constitutes 1 second, bits [3-2] constitutes 2 seconds and bit [7] is I2CSCL2 check. For example, 0b10000111 is 4 second wait time and also checks I2CSCL2 pad status. If I2CSCL2 is low, then a wait time of 6 seconds is used regardless of the bit [3-0] setting. The maximum wait time is 6 seconds, and the minimum wait time is 0 seconds.
0x41 -0x43	M	Reserved
0x44 -0xFF	U	User One-Time Programmable Space

Table 26-1 Information Block (IFB)

27. Writer Mode

Writer Mode (WM) is used by the manufacturer or by users to program the flash (including IFB) through dedicated hardware (Writer or Gang Writer). Under this setup, only WM-related pins should be connected and all other unused pins left floating. Writer mode follows a proprietary protocol and is not released to general users. Users must obtain it through a formal written request to the manufacturer and must sign a strict Non-Disclosure-Agreement. Writer Mode provides the following commands.

ERASE Main Memory

ERASE Main Memory and IFB

READ AND VERIFY Main Memory (8-Byte)

WRITE BYTE Main Memory

READ BYTE IFB

WRITE BYTE IFB

Fast Continuous WRITE

Fast Continuous READ

The writer mode is to protect against code piracy. The default state of the device is locked writer mode. Only ERASEMM and ERASEMMIFB, and READVERIFYMM commands can be executed. It can be unlocked by READVERIFYMM in the range of 0xEFF8 to 0xEFFF. These locations contain an 8-byte security key that users can place to secure the e-Flash contents. The probability of guessing the key is 1 in 2^64 = 1.8E19. Since each trial of READVERIFYMM takes 10usec, it takes about 6E6 years to exhaust the combinations. If the key is unknown, a user can choose to issue the ERASEMM command and then fully erase the entire contents (including the key). Once fully erased, all data in the flash is 0xFF, and it can be successfully unlocked by READVERIFYMM with 8 bytes of 0xFF. Users must not erase the information in IFB and should not modify the manufacturer data. Any violation of this results in the void of the manufacturer's warranty. The following pins are used for e-Flash writer mode. P02 is optional.

PIN	IO	Description	Function
P00	O	Flash serial data output.	SDO
P03	I	Flash serial data input	SDI
P01	I	Flash serial clock input.	SCLK
P04	I	Flash serial port enable, low active	SCE
RSTN	I	Write mode entry input using timing sequence	RSTN
P02	O	TBIT status output	TBIT
VDD	I	Power supply for DUT	VDD
VSS	I	Ground supply for DUT	VSS

Table 27-1 Writer mode PINs and Functions

28. Boot Code and In-System Programming

After production testing of the packaged devices, the manufacturer writes the manufacturer information and calibration data in the IFB. At the last stage, it writes a fixed boot code in the main memory residing from 0xF000 to 0xFFFF. The boot code is executed after any reset. The boot code first reads IFB's wait time setting and scans the I^2C slave for any In-System-Programming request during the wait time duration. If any valid request occurs during the scan, the boot-code proceeds to follow the request and performs the programming from the host. Otherwise, the boot code jumps to 0x0000 after the wait time is expired. The default available ISP commands are as below.

UNLOCK

DEVICE NAME

BOOTC VERSION

READ AND VERIFY Main Memory (8-Byte)

ERASE Main Memory excluding Boot Code

ERASE SECTOR Main Memory

WRITE BYTE Main Memory

SET ADDRESS

CONTINUOUS WRITE

CONTINUOUS READ

READ BYTE IFB

WRITE BYTE IFB

Similar to writer mode, ISP is in a locked state at default. No command is accepted under a locked state. To unlock the ISP, an 8-byte READVERIFY of 0xEFF8 to 0xEFFF must be successfully executed. Hence the default ISP boot program provides similar code security as the Writer mode.

29. Electrical Specifications

29.1 Thermal Characteristics

Symbol	Parameter	Conditions	TYP	Unit
R_{THJA}	thermal resistance from junction to ambient	QFN-40 package free air	37.3	°K/W

29.2 Absolute Maximum Ratings (MCU)

Symbol	Parameter	Rating	Unit	Note
VDD	Supply Voltage	5.5	V	
TA	Ambient Operating Temperature	-40 –85	℃	
TSTG	Storage Temperature	-45 – 125	℃	

29.3 Recommended Operating Condition (MCU)

Symbol	Parameter	Rating	Unit	Note
VDD	Supply Voltage for IO and 1.5V regulator	2.3 – 5.5	V	
TA	Ambient Operating Temperature	-40 – 85	℃	

29.4 Absolute Maximum Ratings (LED Driver)

Supply voltage, VCC	-0.3V ~ +6V
Voltage at SCL, SDA, SDB, INTB, CLKIO, ADDR1, ADDR2	-0.3V ~ VCC+0.3V
Voltage at OUT1 to OUT18	-0.3V ~ +40V
Maximum junction temperature, TJMAX	+150℃
Storage temperature range, TSTG	-45℃ ~ +125℃
Operating temperature range, TA=TJ	-40℃ ~ +85℃
ESD (HBM) ESD (CDM)	±2kV ±750V

Note 1: Stresses beyond those listed under “Absolute Maximum Ratings” may cause permanent damage to the device. These are stress ratings only and functional operation of the device at these or any other condition beyond those indicated in the operational sections of the specifications is not implied. Exposure to absolute maximum rating conditions for extended periods may affect device reliability. MCU DC Electrical Characteristics (VDD = 2.2V to 5.5V TA=-40℃ to 85℃)

Symbol	Parameter	Min	Typ	Max	Unit	Note
Power Supply Current						
IDD Normal	Total IDD through VDD at 16MHz Peripherals off	-	3.5	-	mA	
IDD Normal	Total IDD through VDD at 1MHz Peripherals off	-	1.0	-	mA	
IDD versus Frequency	IDD Core Current versus Frequency	-	150	-	uA/ MHz	
IDD, Stop	IDD, stop mode	-	500	-	µA	Main regulator on
IDD, Sleep	IDD, sleep mode, 25℃	-	1.5	5	µA	Main regulator off
	IDD, sleep mode, 85℃	-	4	10	µA	Main regulator off
RSTN Reset						
VIHRS	Input High Voltage, reference to VDD	0.7VDD	-	-	V	
VILRS	Input Low Voltage	-	-	0.2VDD	V	
VRSHYS	RSTN Hysteresis	-	0.2VDD	-	V	
GPIO DC Characteristics						
VOH,4.5V	Output High Voltage 1 mA	-	-0.2	-0.5	V	Reference to VDD

Symbol	Parameter	Min	Typ	Max	Unit	Note
VOL,4.5V	Output Low Voltage 8 mA	-	0.3	0.5	V	Reference to VSS
VOH,3.0V	Output High Voltage 1 mA	-	-0.3	-0.6	V	Reference to VDD
VOL,3.0V	Output Low Voltage 8 mA	-	0.3	0.6	V	Reference to VSS
IIOT	Total IO Sink and Source Current	-80	-	80	mA	
VIH	Input High Voltage	¾VDD	-	-	V	
VIL	Input Low Voltage	-	-	¼VDD	V	
VIHYS	Input Hysteresis	-	1	-	-	
RPU	Equivalent Pull-Up resistance	-	25K	-	Ohm	
RPU,RSTN	RSTN Pull-Up resistance	-	5K	-	Ohm	
RPD	Equivalent Pull-Down Resistance	-	25K	-	Ohm	
REQAN1	Equivalent ANIO Switch Resistance @3.3V	-	110	-	Ohm	ANIO1 Switch
	Equivalent ANIO Switch Resistance @5V	-	100	-	Ohm	ANIO1 Switch
REQAN2	Equivalent ANIO Switch Resistance @3.3V	-	450	-	Ohm	ANIO2 Switch
	Equivalent ANIO Switch Resistance @5V	-	350	-	Ohm	ANIO2 Switch
VDDC Characteristics						
VDDCN	Normal Core Voltage 1.5V (Calibrated)	1.4	1.5	1.6	V	Normal Mode
VDDCS	Sleep Core Voltage 1.5V	-	1.42	-	V	Sleep Mode
Low Supply (VDD) Voltage Detection						
VDET	Detection Range	2.0	-	4.8	V	
VDETHYS	Detection Hysteresis	-	100	-	mV	
ADC12 Characteristics						
ADCLIN	ADC Linearity, Center range	-	+/- 2	-	LSB	
	ADC Linearity, 0.2V to FS-0.2V	-	+/- 3	-	LSB	
ADCFQ	ADC Frequency	-	2	4	MHz	

29.5 LED DC Electrical Characteristics (VDD = 2.2V to 5.5V TA=-40℃ to 85℃)

V_{CC}= 5V, T_J= T_A= 25℃, unless otherwise noted. (Note 3)

Symbol	Parameter	Condition	Min.	Typ.	Max.	Unit
VCC	Supply voltage		3		5.5	V
IOUT	Maximum output current	RISET= 6.8kΩ, GCC= 0x20, Scaling= 0xFF, PWM= 0xFF, VOUT= 0.8V (Note 4)		60		mA
	Output current	RISET= 20kΩ, GCC= 0x20, Scaling= 0xFF, PWM= 0xFF		20.4		mA
ΔIMAT	IOUT mismatch (bit to bit)	RISET= 20kΩ, GCC= 0x20, Scaling= 0xFF, PWM= 0xFF	-4		4	%
ΔIOUT	IOUT accuracy (Device to device)	RISET= 20kΩ, GCC= 0x20, Scaling= 0xFF, PWM= 0xFF	-6		6	%
VHR	Headroom voltage	RISET= 20kΩ, GCC= 0x20, Scaling= 0xFF, PWM= 0xFF		0.3	0.5	V
ICC	Quiescent power supply current	RISET= 20kΩ,, GCC= 0xFF, Scaling= 0xFF, PWM= 0		7.5	9	mA

Symbol	Parameter	Condition	Min.	Typ.	Max.	Unit
		VCC= 3.6V, RISET= 20kΩ, GCC= 0xFF, Scaling= 0xFF, PWM= 0		7.2	8.5	mA
ISD	Shutdown current	RISET= 20kΩ, VSDB= 0V or software shutdown		3	10	μA
		VCC= 3.6V, RISET= 20kΩ, VSDB= 0V or software shutdown		1.2	5	μA
VISET	ISET voltage	RISET= 20kΩ, GCC= 0x20, Scaling= 0xFF, PWM= 0xFF	0.98	1.0	1.02	V
VOD	OUTx pin open detect threshold	RISET=20kΩ, GCC= 0x20, Scaling= 0xFF, PWM=0xFF, measured at OUTx	100	150		mV
IOZ	Output leakage current	VSDB= 0V or software shutdown, VOUT= 40V			1	μA
fOUT	PWM frequency of output	Frequency setting= 25kHz	22	25	28	kHz
TSD	Thermal shutdown			165		℃
TSD_HYS	Thermal shutdown hysteresis			20		℃

VCC= 5V, TJ= TA= 25℃, unless otherwise noted. (Note 5)

Symbol	Parameter	Condition	Min.	Typ.	Max.	Unit
Logic Electrical Characteristics (SDA, SCL, ADDR1, ADDR2, SDB, CLKIO)						
V_{IL}	Logic “0” input voltage	V_{CC}= 2.7V~5.5V, LGC=0			0.4	V
V_{IH}	Logic “1” input voltage	V_{CC}= 2.7V~5.5V, LGC=0	1.4			V
V_{IL}	Logic “0” input voltage	V_{CC}= 2.7V~5.5V, LGC=1			0.6	V
V_{IH}	Logic “1” input voltage	V_{CC}= 2.7V~5.5V, LGC=1	2.4			V
V_{OH}	H level of CLKIO pin output voltage	I_{OH}= -8mA	V_{CC}- 0.4V		V_{CC}	V
V_{OL}	L level of CLKIO/INTB pin output voltage	I_{OL}= 8mA	0		0.4	V
I_{IL}	Logic “0” input current	V_{INPUT}= 0V (Note 9)		5		nA
I_{IH}	Logic “1” input current	V_{INPUT}= V_{CC} (Note 9)		5		nA

Note 2: Production testing of the device is performed at 25℃. Functional operation of the device specified over -40℃ to +85℃ temperature range, is guaranteed by design, characterization and process control.

Note 3: The recommended minimum value of RISET is 6.8kΩ.

Note 4: Guaranteed by design.

29.6 MCU AC Electrical Characteristics (VDD =2.2V to 5.5V TA=-40℃ to 85℃)

Symbol	Parameter	Min	Typ	Max	Unit	Note
System Clock and Reset						
FSYS	System Clock Frequency	-	16	33	MHz	
FIOSC	Crystal Oscillator Frequency	5	16	25	MHz	
TSIOSC	Stable Time for IOSC after power up	2	-	-	msec	After VDD > 2.0V
Supply Timing						
TSUPRU	VDD Ramp Up time	1	-	50	msec	WST = 0 for 16MHz
TSUPRD	VDD Ramp Down Time	-	-	50	msec	
TPOR	Power On Reset Delay	-	5	-	msec	
IOSC						

Symbol	Parameter	Min	Typ	Max	Unit	Note
FIOSC	IOSC Calibrated 16MHz/32MHz	-1	0	+1	%	
	IOSC Startup Time	-	-	1	μs	
	Temperature and VDD variation 85℃	-2	0	+2	%	
	Temperature and VDD variation 125℃	-3	0	-3	%	
SOSC						
SOSC	Slow Oscillator frequency	-	128	-	kHz	
IO Timing						
TPD3 ++	Propagation Delay 3.3V No load	-	6	-	ns	
TPD3 ++	Propagation Delay 3.3V 25pF load	-	15	-	ns	
TPD3 ++	Propagation Delay 3.3V 50pF load	-	20	-	ns	
TPD3 --	Propagation Delay 3.3V No load	-	5	-	ns	
TPD3 --	Propagation Delay 3.3V 25pF load	-	12	-	ns	
TPD3 --	Propagation Delay 3.3V 50pF load	-	15	-	ns	
TPD5 ++	Propagation Delay 3.3V No load	-	5	-	ns	
TPD5 ++	Propagation Delay 3.3V 25pF load	-	12	-	ns	
TPD5 ++	Propagation Delay 3.3V 50pF load	-	16	-	ns	
TPD5 --	Propagation Delay 3.3V No load	-	4	-	ns	
TPD5 --	Propagation Delay 3.3V 25pF load	-	9	-	ns	
TPD5 --	Propagation Delay 3.3V 50pF load	-	12	-	ns	
Flash Memory Timing						
TEMAC	Embedded Flash Access Time	-	40	45	ns	TWAIT must > TEMAC
TEMWR	Embedded Flash Write Time	-	20	25	μs	
TEMSER	Embedded Flash Sector Erase Time	-	2	2.5	ms	
TEMMER	Embedded Flash Mass Erase Time	-	10	12	ms	

29.7 LED AC Electrical Characteristics (VDD =2.2V to 5.5V TA=-40℃ to 85℃) (NOTE 6)

Symbol	Parameter	Fast Mode			Fast Mode Plus			Units
		Min.	Typ.	Max.	Min.	Typ.	Max.	
f_{SCL}	Serial-clock frequency	-		400	-		1000	kHz
t_{BUF}	Bus free time between a STOP and a START condition	1.3		-	0.5		-	μs
$t_{HD, STA}$	Hold time (repeated) START condition	0.6		-	0.26		-	μs
$t_{SU, STA}$	Repeated START condition setup time	0.6		-	0.26		-	μs
$t_{SU, STO}$	STOP condition setup time	0.6		-	0.26		-	μs
$t_{HD, DAT}$	Data hold time	-		-	-		-	μs
$t_{SU, DAT}$	Data setup time	100		-	50		-	ns
t_{LOW}	SCL clock low period	1.3		-	0.5		-	μs
t_{HIGH}	SCL clock high period	0.7		-	0.26		-	μs
t_R	Rise time of both SDA and SCL signals, receiving	-		300	-		120	ns
t_F	Fall time of both SDA and SCL signals, receiving	-		300	-		120	ns

Note 5: Guaranteed by design.

29.8 Classification Reflow Profiles

Pb-Free Process-Package Classification Temperatures

Package Thickness	Volume mm3<350	Volume mm3: 350-2000	Volume mm3>2000
<1.6 mm	260℃	260℃	260℃
1.6 mm-2.5 mm	260℃	250℃	245℃
>=2.5 mm	250℃	245℃	245℃

Profile Feature	Pb-Free Assembly
Ramp-Up Rate (TL to Tp)	3℃ / second max.
Preheat – Temperature Min (Tsmin) to Max (Tsmax)	150~200℃
Preheat –To,e (tsmin to tsmax)	60-120 seconds
Time maintained above – Temperature (TL)	217℃
Time maintained above – Time (tL)	60-150 seconds
Peak package body temperature (Tp)	See package classification
Time within 5℃ of specified classification Temperature (tp)	30 second min.
Ramp-Down Rate (Tp to TL)	6℃ / second max.
Time 25℃ to Peak Temperature	8 minutes max.
Number of applicable Temperature cycles	3 cycles max.

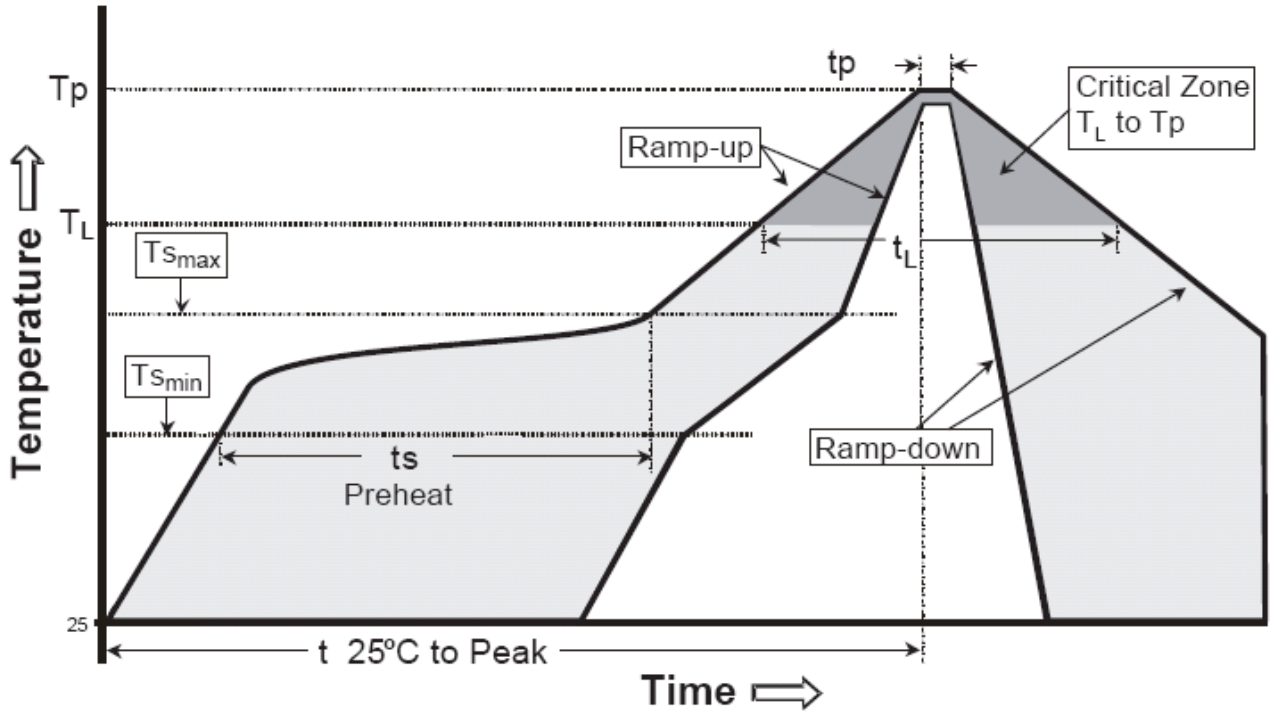

Figure 29-1 Temperature Reflow Profile

30. Packaging outline

30.1 40-pin QFN

30.1.1 Recommended Land Pattern

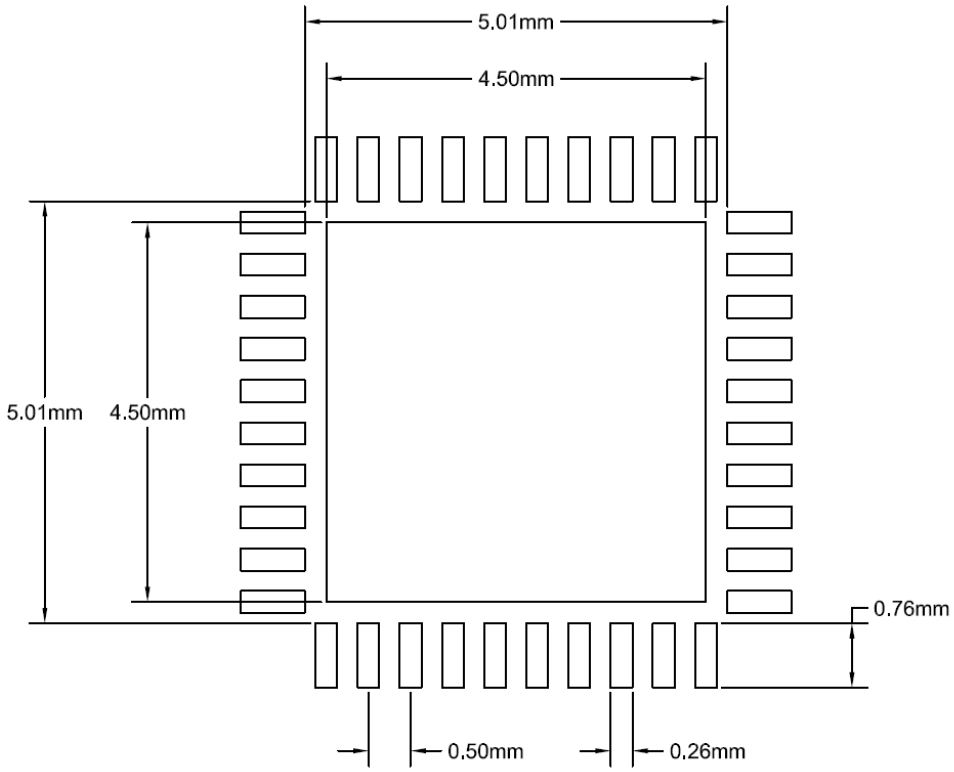

30.1.2POD

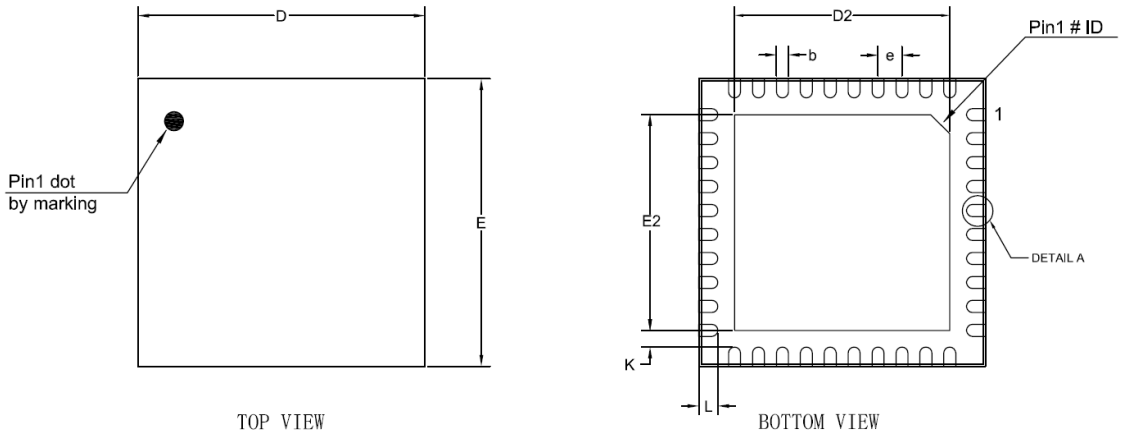

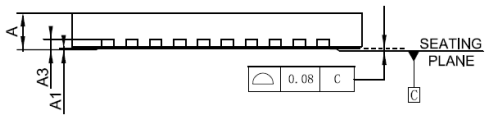

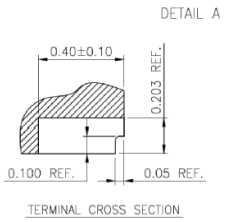

SYMBOL	MILLIMETER		
	MIN	NOM	MAX
A	0.70	0.75	0.80
A1	0.00	0.02	0.05
A3	0.203REF		
D	5.90	6.00	6.10
E	5.90	6.00	6.10
E2	4.45	4.50	4.55
D2	4.45	4.50	4.55
b	0.18	0.25	0.30
L	0.30	0.40	0.50
K	0.20	–	–
e	0.50BSC		

Note:

1. Controlling dimension: mm.
2. Reference document: JEDEC MO-220.

31. Ordering Information

Temperature Range: -40℃ to 85℃

Order Part No.	Package	QTY/Reel
IS31CS8979-QFLS2-TR	QFN-40, Lead-free	2500/Reel

Copyright © 2024 Lumissil Microsystems. All rights reserved. Lumissil Microsystems reserves the right to make changes to this specification and its products at any time without notice. Lumissil Microsystems assumes no liability arising out of the application or use of any information, products or services described herein. Customers are advised to obtain the latest version of this device specification before relying on any published information and before placing orders for products.

Lumissil Microsystems does not recommend the use of any of its products in life support applications where the failure or malfunction of the product can reasonably be expected to cause failure of the life support system or to significantly affect its safety or effectiveness. Products are not authorized for use in such applications unless Lumissil Microsystems receives written assurance to its satisfaction, that:

a.) the risk of injury or damage has been minimized;
b.) the user assumes all such risks; and
c.) potential liability of Lumissil Microsystems is adequately protected under the circumstances.

32. Errata

33. Revision

Revision	Detailed Information	Date
00A	Initial release for brief	2022.11.28
0A	Draft release	2023.06.26
A	Product release	2024.03.22
B	Change ADC channel names to meet the description in Figure 21-1. Update the input signal name typo in Figure 15-4.	2024.05.21
	Update e-Flash's data retention spec.	2025.08.18