DS230S-75DC



- MOV Technology
- UL1449 Type 4CA
- 30kA Surge Current Rating per module
- Visual fault indicator and remote contacts
- 10-Year warranty

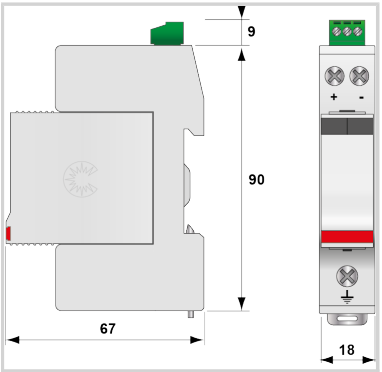

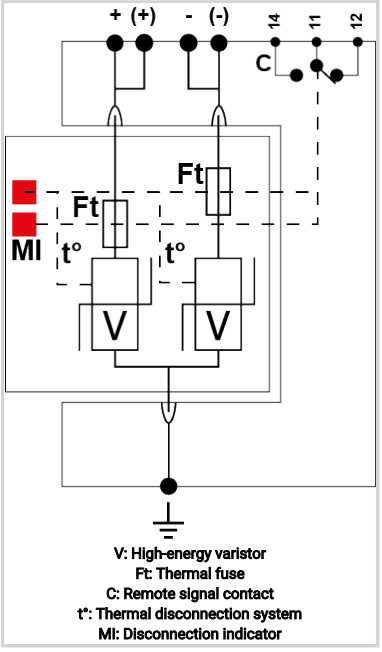

V: High-energy varistor
Ft: Thermal fuse
C: Remote signal contact
t°: Thermal disconnection system
MI: Disconnection indicator

Electrical Characteristics		
Network		DC or PV network 75Vdc
Nominal line voltage	Un	75 Vdc
Max. AC operating voltage	Uc	50 Vac
Max. DC operating voltage	Uc	85 Vdc
Max. load current @25°C	IL	50 A
Max. discharge current *max. withstand @ 8/20 µs by pole*	Imax	30 kA
Total Maximum discharge current *max. total withstand @ 8/20 µs*	Imax Total	30 kA
Connection mode(s)		+/-/PE
Protection mode(s)		Common mode
POWER SPD TYPE		IEC Type 2
VOLTS	(V)	75
AC/DC/DC PV/RF		DC
PHASE	(PH)	
AMPS	(A)	N/A
AMBIENT MIN	(C)	-30
AMBIENT MAX	(C)	+85
MODES		DC+-G or DC--G
MLV DC	(V)	1520/1370/1360
MCOV	(V)	100/100/100
IN *15 impulses 8/20µs*	(kA)	20
SCCR	(kA)	n/a
IMAX *8/20µs*	(kA)	30
Mechanical Characteristics		
Technology		MOV
Format		Plug-in modular box
Operating temperature	Tu	-40/+85°C
Protection rating		IP20
Failsafe mode		Disconnection from DC network
TECHNOLOGY		MOV
NETWORK CONFIGURATION		2W+G
CONNECTION METHOD		SPD-Screw Terminal (8-12AWG), Terminal blocks 6AWG
MOUNTING		Wall mount
MATERIAL		Thermoplastic UL94-V0
NEMA RATING (IP RATING)		NEMA 2 (IP20)
FAIL-SAFE BEHAVIOR		Disconnection via fuse-link
REAL-TIME DIAGNOSTICS		Visual indicator and remote contacts
DIMENSIONS		See diagram
WEIGHT		0.30 lbs
SPARE PART		DSM230-75DC
Standards		

DS230S-75DC

Environmental standards		EU RoHS
UL STANDARD		UL1449 5th Edition
UL CATEGORY		VZCA2, VZCA8
UL FILE NUMBER		E326289
STANDARDS		IEC 61643-11, NOM-003-SCFI-2014, NOM-001-SCFI-1993
Part number		
390611		