159 MHz SAW Filter

Features

- SMD Mount filter
- Compact package size

5.0 x 5.0 x 1.35
RoHS/RoHS II Compliant
MSL Level = N/A

Maximum Ratings

Rating	Value
Source Power (Ps) (dBm)	20
DC Voltage (Vdc) (V)	10
Operating Temperature Range (T_A)	-40ºC~+85ºC
Storage Temperature Range (Tstg)	-45ºC~+125ºC

Electrical Characteristics

Parameters		Specifications		
		Min	Typ	Max
Nominal Center Frequency (Fc) (MHz)			159.0	
1dB Bandwidth (MHz)		9.0	9.8	
3dB Bandwidth (MHz)				
40dB Bandwidth (MHz)				
Insertion Loss (dB) (155.0 MHz~163.0MHz)			2.0	3.0
Amplitude Ripple (dB) (155.0 MHz~163.0MHz)			0.8	1.5
Absolute Attenuation (dB)	DC~145.0 MHz	50	55	
	184~250 MHz	40	45	
	250~500 MHz	50	55	
Group Delay Variation (nsec)(p-p) (155.0~163.0 MHz)			50	150
Absolute Delay (usec)				
Temperature Coefficient of Frequency (ppm/K)				
Impedance (Ω)	Zs		50	
	Zl		50	

Mechanical Specifications

Parameters	Specifications
Filter Dimension	5.0 x 5.0 x 1.35 mm
Mounting Type	SMD Mount

Package Dimensions

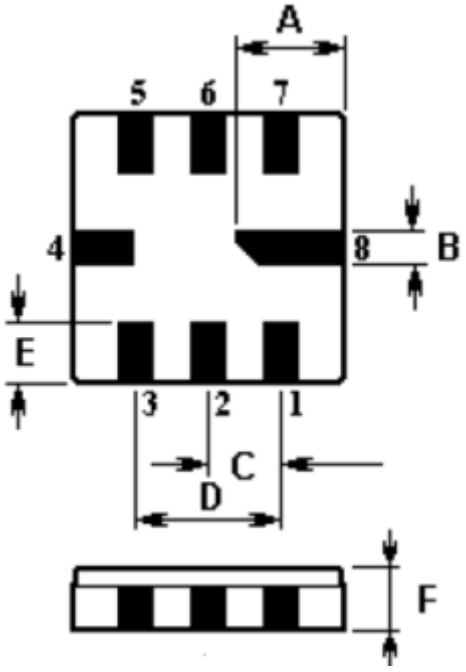

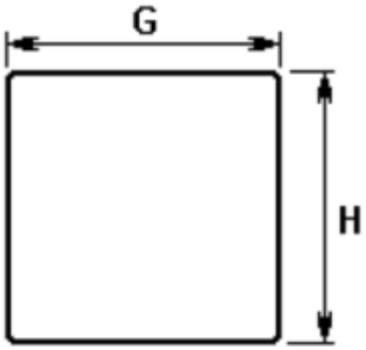

Pin	Configuration
1	Input / Output Ground
2	Input / Output
5	Output / Input Ground
6	Output / Input
3, 7	To be Grounded
4,8	Case Ground

Sign	Data (unit: mm)	Sign	Data (unit: mm)
A	2.08	E	1.20
B	0.60	F	1.35
C	1.27	G	5.00
D	2.54	H	5.00

Matching Circuit

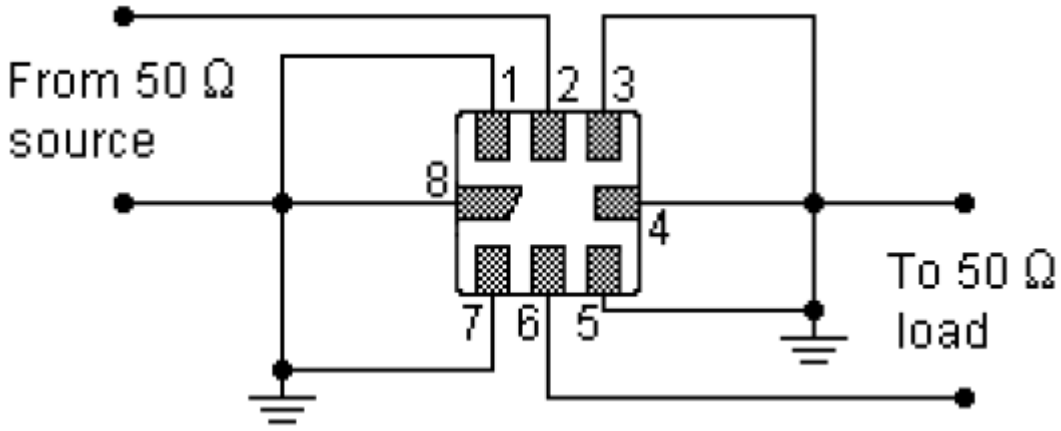

Frequency Response

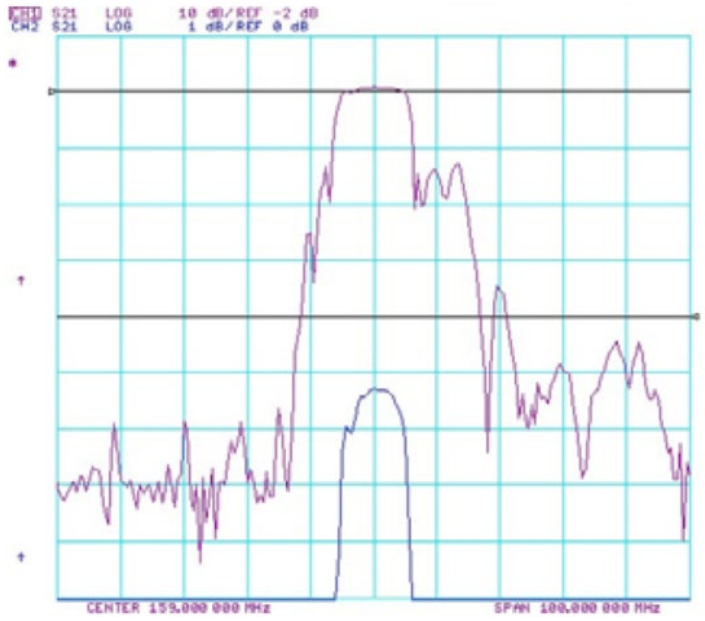

S11 Chart

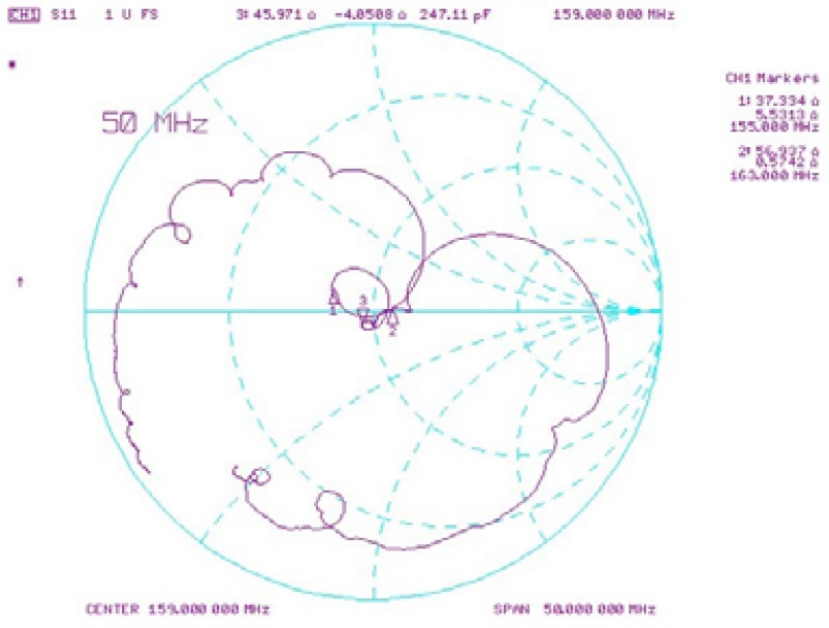

TAPE SPECIFICATIONS (mm)						
A	B	C	D	E	F	REEL QTY
ø1.5	4.0	8.0	5.5	12.0	1.45	1,000

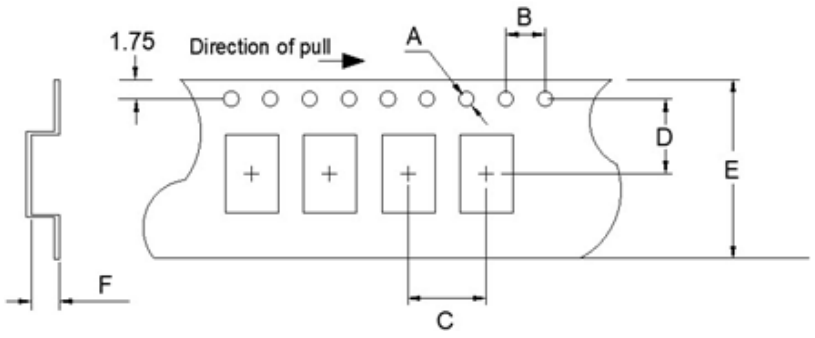

RELIABILITY TEST CONDITIONS
Please contact Abracon Quality Assurance department