APPROVED: _____

DATE: _____ TITLE: _____

Rev	AWO #	Description	Date	Appr
-		RELEASED	6/22/12	
A		REVISED SHAPE	9/18/13	AY/AL
B		ADDED DIM.	8/20/15	AY/SY
C		REVISED SHAPE	9/22/15	
D		UPDATED CONTACTS DIM.	4/26/19	AY/SL

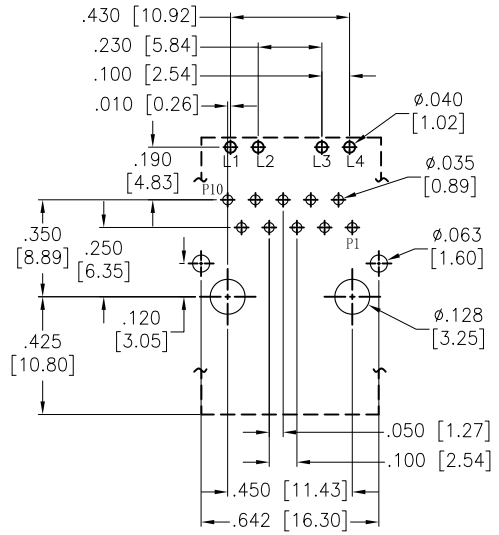

RECOMMENDED PCB LAYOUT

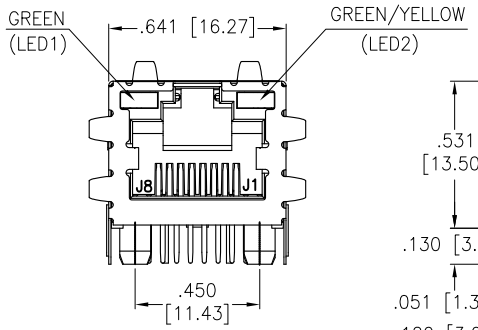

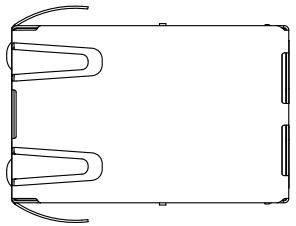

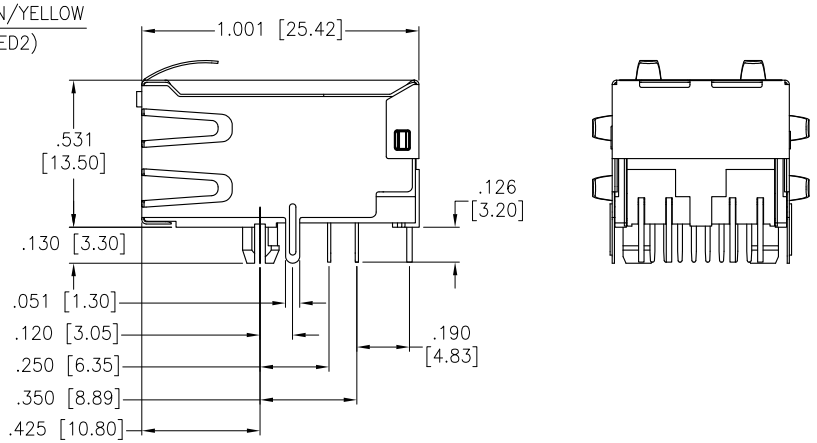

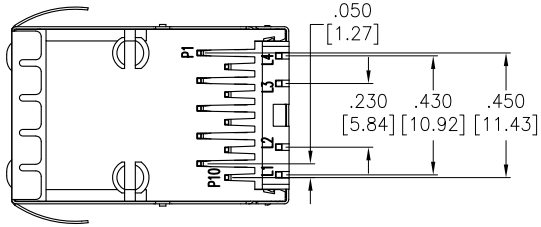

SPECIFICATIONS:
Material:
Insulator: Thermoplastic, rated UL 94V-0
Insulator color: Black
Contacts: Copper Alloy
Shield: Stainless Steel, Pre-soldering
Plating:
Round contact
Gold over Nickel underplate overall
Flat contact
Gold over Nickel underplate on contact area
Tin over Nickel underplate on solder tails
Electrical:
Insulation resistance: 500 Mohms min
Dielectric withstanding voltage: 1500VAC or 2250VDC for 1 minute
Temperature Rating:
Operating temperature: -0°C to +70°C
Environmental:
Lead free, RoHS compliant.

RoHS COMPLIANT

UNLESS OTHERWISE SPECIFIED
ALL DIMENSIONS ARE INCHES [MM]
TOLERANCES: EXCEPT AS NOTED

INCHES		HOLES	
.X	± .10	Ø.X	±.10
.XX	± .020	Ø.XX	±.015
.XXX	± .015	Ø.XXX	±.010

APPROVALS		DATE
DRAWN	AY	6/22/12
CHECKED	AL	6/22/12
APPROVED		

ADAM TECH INTERCONNECTS
909 Rahway Avenue,
Union, NJ 07083
Phone: 908-687-5000
Fax: 908-687-5710

TITLE
MODULAR TELEPHONE JACK, 1 PORT, 8P8C
W/ LED1 GREEN, LED2 GREEN / YELLOW

SIZE	PART NO.	REV.
X	MTJ-88SX1-FSD-PG-LV-M66D	D

REF: S00101C | SCALE: NTS | SHEET 1 OF 2

Rev	AWO #	Description	Date	Appr
SEE SHT 1 OF 2 FOR REVISION				

APPROVED: _____

DATE: _____ TITLE: _____

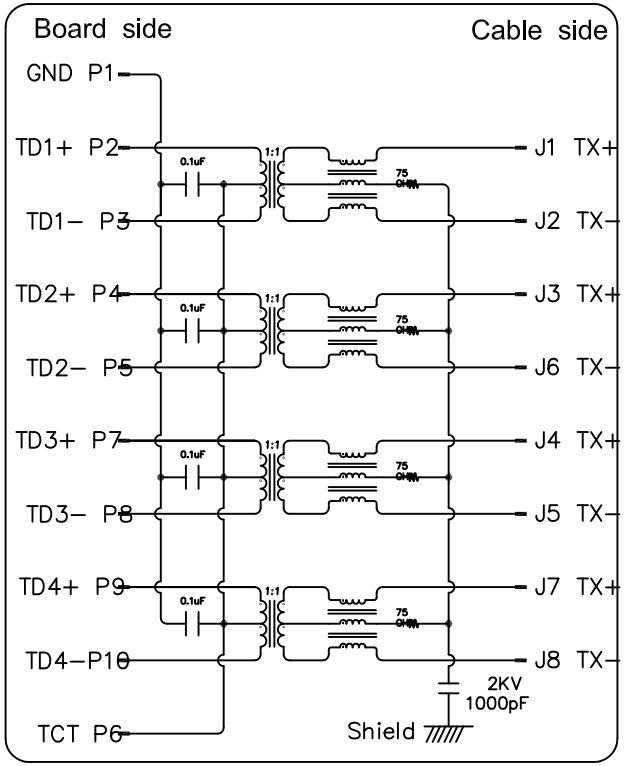

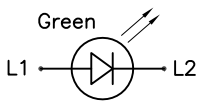

LEFT LED

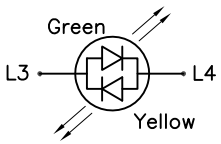

RIGHT LED

ELECTRICAL CHARACTERISTICS :

1. INSERTION LOSS :
   – 1~100 MHz –1.0dB MAX.

2. RETURN LOSS(LOAD 100Ω) :
   – 1~30 MHz –18dB MIN
   – 30~60 MHz –16dB MIN
   – 60~80 MHz –12dB MIN
   – 80~100 MHz –10dB MIN

3. COMMON MODE REJECTION
   – 1~100 MHz –30dB MIN

4. CROSS TALK
   – 1~100 MHz –30dB MIN

5. INDUCTANCE @ 100KHz, 0.1V, 8mA DC BIAS
   – (P2–P3),(P4–P5),(P7–P8),(P9–P10) : 350 uH MIN

6. DCR
   – (J1–J2),(J3–J6),(J4–J5),(J7–J8) : 1.2 OMH MAX

6. HI–POT TEST
   – BOARD SIDE TO CABLE SIDE : 1500VAC 60S OR 2250VDC 60S

7. TURNS RATION 100KHz
   – (P2–P3) : (J1–J2) = 1:1 ±%5
   – (P4–P5) : (J3–J6) = 1:1 ±%5
   – (P7–P8) : (J4–J5) = 1:1 ±%5
   – (P9–P10) : (J7–J8) = 1:1 ±%5

RoHS COMPLIANT

UNLESS OTHERWISE SPECIFIED
ALL DIMENSIONS ARE INCHES [MM]
TOLERANCES: EXCEPT AS NOTED

INCHES		HOLES	
.X	± .10	Ø.X	±.10
.XX	± .020	Ø.XX	±.015
.XXX	± .015	Ø.XXX	±.010

APPROVALS		DATE
DRAWN	AY	6/22/12
CHECKED	AL	6/22/12
APPROVED		

ADAM TECH
INTERCONNECTS
909 Rahway Avenue,
Union, NJ 07083
Phone: 908-687-5000
Fax: 908-687-5710

TITLE
MODULAR TELEPHONE JACK, 1 PORT, 8P8C
W/ LED1 GREEN, LED2 GREEN / YELLOW

SIZE	PART NO.	REV.
X	MTJ-88SX1-FSD-PG-LV-M66D	D

REF: S00101C | SCALE: NTS | SHEET 2 OF 2