PX0839/90 Datasheet

Product Name // Rear Panel Mount Connector PX0839 Series CAT5e Shielded Socket 90 Degree PCB Pins

View Product Page



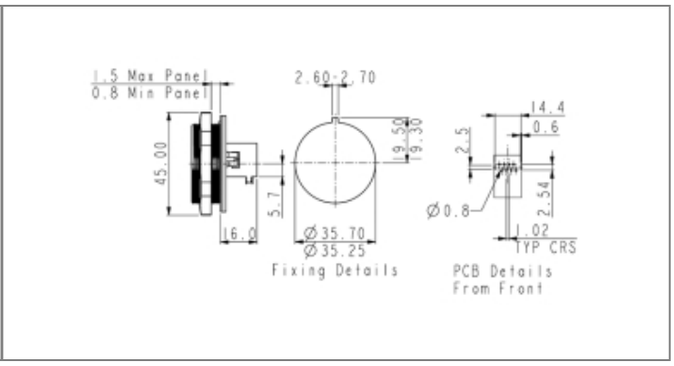

// Product Description:

- Rear Panel Mount Connector
- Water and dustproof to IP68 when mated with compatible connector
- CAT5e shielded socket
- Supplied with panel sealing gasket
- Choice of Termination:
- PX0839/PC has straight PCB pins, for direct vertical mounting to PCB
- PX0839/90 has 90 degree PCB pins, for direct horizontal mounting to PCB
- PX0839/IDC has two IDC blocks, for discrete termination
- PX0711 Sealing Cap available separately to maintain IP rating of unmated connectors
- Mates with PX0834, PX0836, PX0837, PX0838 Standard Series Flex Cable Connectors

// General Information:

Product Display Title:	Rear Panel Mount Connector
Product Family:	Circular Data Connectors
Product Series:	Standard Buccaneer - Ethernet
Body Material:	Polyester (PET)
Body Material Type:	Plastic Body
Contact Type:	Socket Contact
Coupling Type:	Screw
Current Max:	1.5A
Diameter Over Coupling Ring Mm:	38.1mm
Flamability Rating:	UL94V-0
Ip Rating:	IP68, IP69K
Max Operating Temperature:	+70°C
Min Operating Temperature:	-20°C
Number Of Contacts:	8 Contacts
Rohs Compliant:	Yes
Voltage Max:	42V

// Product PDF Links

Standard Series Ethernet...

// Product 3D CAD Model Links

PX0839/903D CAD Model