XR81101

Universal Clock - High Frequency LVCMOS Clock Synthesizer

General Description

The XR81101-AA02 is a clock synthesizer operating at a 3.3V/2.5V supply with Integer divider, using a 25MHz parallel resonant crystal reference input provides a 125MHz LVCMOS output. The device is optimized for use with a 25MHz crystal (or system clock) and generates a 125MHz output clock for GE applications. The LVCMOS output has very low phase noise jitter of sub 150fs, while consuming extremely low power.

The application diagram below shows a typical synthesizer configuration with any standard crystal oscillating in fundamental mode. Internal load capacitors are optionally available to minimize/eliminate external crystal loads. A system clock can also be used to overdrive the oscillator for a synchronous timing system.

The typical phase noise plot below shows the jitter integrated over the 1.875MHz to 20MHz range that is widely used in WAN systems. These clock devices show a very good high frequency noise floor below -150dB.

The XR81101 is a family of Universal Clock synthesizer devices in TSSOP-8 packages. The devices generate ANY frequency in the range of 10MHz to 200MHz by utilizing a highly flexible delta sigma modulator and a wide ranging VCO. These devices can be used with standard crystals or external system clock to support a wide variety of applications. This family of products has an extremely low power PLL block with core power consumption 40% less than the equivalent devices from competition. By second sourcing several of the existing sockets, these devices provides a very compelling power efficiency value benefit across all market segments.

Other clock multiplier and/or driver configurations are possible in this clock family and can be requested from the factory

FEATURES

- XR81101-AA02: Factory configured
- One LVCMOS output
- Crystal oscillator interface which can also be overdriven using a single-ended reference clock
- Output frequency: 125MHz
- Crystal/input frequency: 25MHz, parallel resonant crystal
- RMS phase jitter @ 125MHz, 1.875MHz - 20MHz: < 150fs
- Full 3.3V or 2.5V operating supply
- -40°C to 85°C ambient operating temperature
- Lead-free (RoHS 6) package

APPLICATIONS

- Gigabit Ethernet
- Low-jitter Clock Generation
- Synchronized clock systems

Ordering Information – page 8

The product(s) mentioned in this data sheet are no longer being manufactured and may not be ordered (OBS)

Typical Application

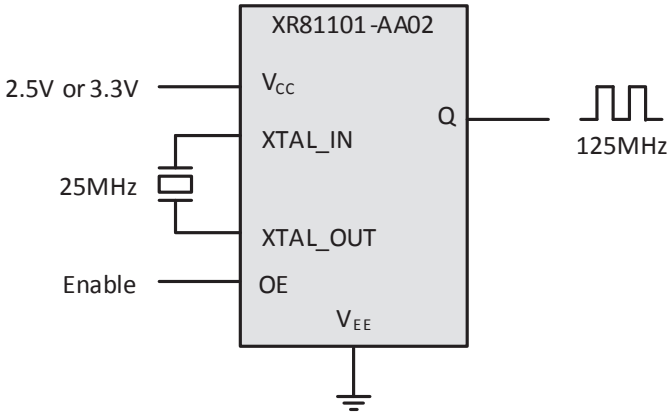

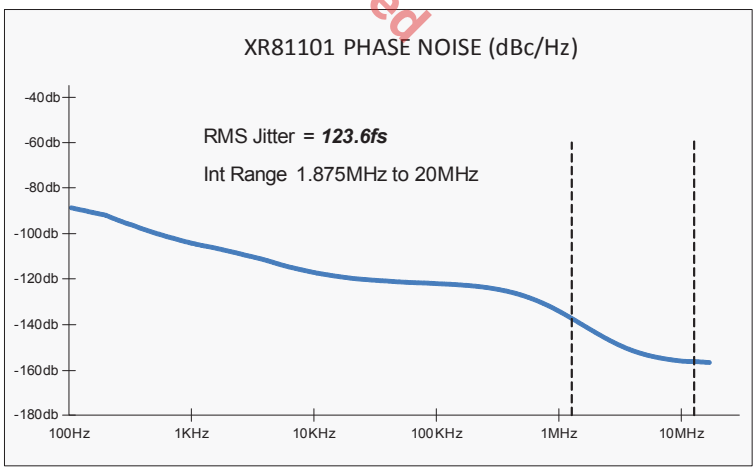

© 2014 Exar Corporation

Absolute Maximum Ratings

Stresses beyond those listed under Absolute Maximum Ratings may cause permanent damage to the device. Exposure to any Maximum Rating condition for extended periods may affect device reliability and lifetime.

Supply Voltage.....+4.2V

Input Voltage.....-0.5V to VCC + 0.5V

Output Voltage.....-0.5V to VCC + 0.5V

Reference Frequency/Input Crystal.....10MHz to 60MHz

Storage Temperature.....-55°C to +125°C

Lead Temperature (Soldering, 10 sec).....300°C

ESD Rating (HBM - Human Body Model).....2kV

Operating Conditions

Operating Temperature Range.....-40°C to +85°C

The product (or products) mentioned in this data sheet are no longer being manufactured and may not be ordered (OBS)

Electrical Characteristics

Unless otherwise noted: T_A = -40°C to +85°C, V_{CC} = 3.3V±5% or 2.5V±5%, V_{EE} = 0V

Symbol	Parameter	Conditions	*	Min	Typ	Max	Units
3.3V Power Supply DC Characteristics							
V_{CC}	Power Supply Voltage		•	3.135	3.3	3.465	V
I_{EE}	Power Supply Current	125MHz with output unloaded.			24		mA
2.5V Power Supply DC Characteristics							
V_{CC}	Power Supply Voltage		•	2.375	2.5	2.625	V
I_{EE}	Power Supply Current	125MHz with the output unloaded.			21		mA
LVCMOS/LVTTL DC Characteristics							

The product (or products) mentioned in this data sheet are no longer being manufactured and may not be ordered (OBS)

Symbol	Parameter	Conditions	*	Min	Typ	Max	Units
V_{IH}	Input High Voltage	V_{CC} = 3.465V	•	2.42		V_{CC} + 0.3	V
		V_{CC} = 2.625V	•	1.83		V_{CC} + 0.3	V
V_{IL}	Input Low Voltage	V_{CC} = 3.465V	•	-0.3		1.03	V
		V_{CC} = 2.625V	•	-0.3		0.785	V
I_{IH}	Input High Current (OE, FSEL[1:0])	V_{IN} = V_{CC} = 3.465V or 2.625V	•			15	µA
I_{IL}	Input Low Current (OE, FSEL[1:0])	V_{IN} = 0V, V_{CC} = 3.465V or 2.625V	•	-10			µA
LVCMOS DC Characteristics							
V_{OH}	Output High Voltage	Output unloaded	•	0.8 x V_{CC}			V
V_{OL}	Output Low Voltage	Output unloaded	•			0.1 x V_{CC}	V
Crystal Characteristics							
X_{Mode}	Mode of Oscillations				Fundamental		
X_f	Frequency				25		MHz
ESR	Equivalent Series Resistance					50	Ω
C_S	Shunt Capacitance					7	pF
AC Characteristics							
f_{OUT}	Output Frequency				125		MHz
$t_{jit}(\phi)$	RMS Phase Jitter	125MHz (Int. Range 1.875MHz-20MHz)			0.15		pS
$t_{jit}(cc)$	Cycle-to-Cycle Jitter	Using 25MHz, 18pF resonant crystal	•			10	pS
t_R/t_F	Output Rise/Fall Time	20% to 80%	•	100		550	pS
Odc	Output Duty Cycle		•	48		52	%

* Limits applying over the full operating temperature range are denoted by a "•".

© 2014 Exar Corporation

Pin Configuration

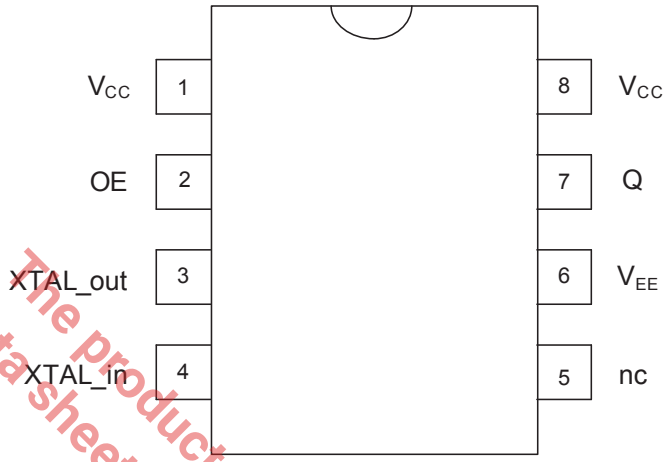

The product (or products) mentioned in this datasheet are no longer being manufactured and may not be ordered (OBS)

Pin Assignments

Pin No.	Pin Name	Type	Description
1	V_{CC}	Supply	Power supply pin.
2	OE	Input (900KΩ pull-up)	Output enable pin - LVCMOS/LVTTL active high input. Outputs are enabled when OE = high. Outputs are disabled when OE = low.
3	XTAL_OUT	Output	Crystal oscillator output.
4	XTAL_IN	Input	Crystal oscillator input.
5	nc	No Connect	Unused, do not connect.
6	V_{EE}	Supply	Negative supply pin.
7	Q	Output	LVCMOS output.
8	V_{CC}	Supply	Power supply pin.

© 2014 Exar Corporation

Functional Block Diagram

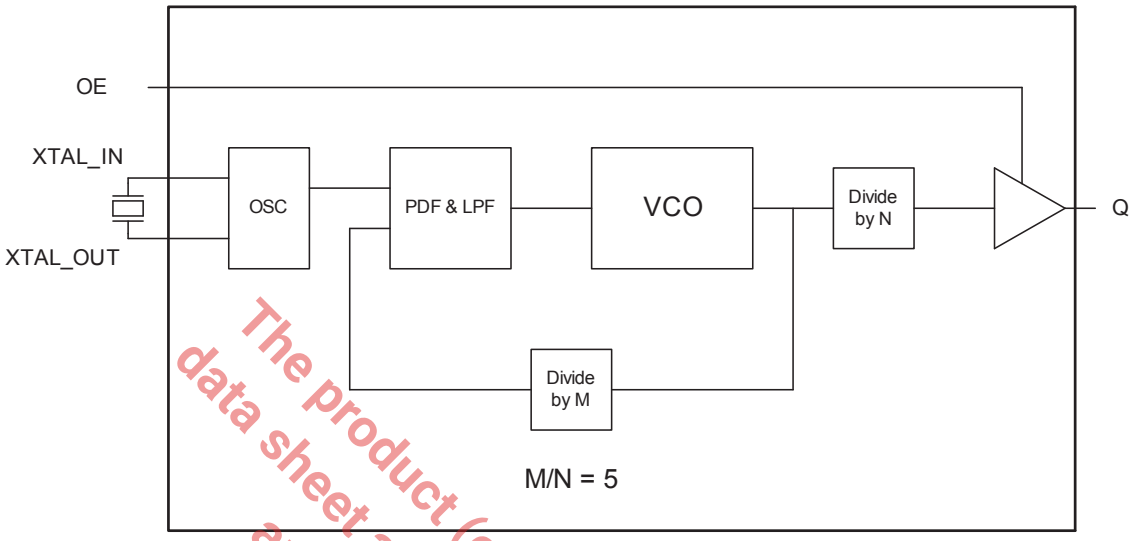

The product (or product(s) mentioned in this data sheet are no longer being manufactured and may not be ordered.

Typical Performance Characteristics

Figure 1 shows a typical phase noise performance plots for a 125MHz clock output. The data was taken using the industry standard Agilent E5052B phase noise instrument. The integration range is 1.875MHz to 20MHz.

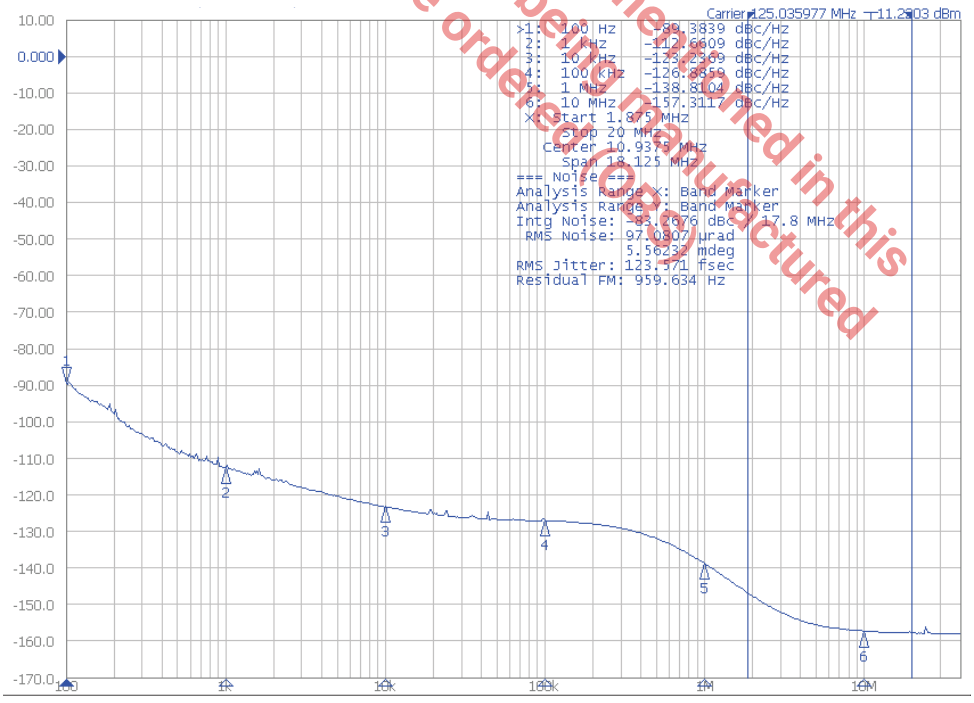

Figure 1: 125MHz Operation, Typical Phase Noise at 3.3V

Application Information

Termination for LVCMOS Outputs

The termination schemes shown in Figure 2 and Figure 3 are typical for LVCMOS outputs. A split supply approach can be used utilizing the scope's internal 50Ω impedance, as shown in Figure 4.

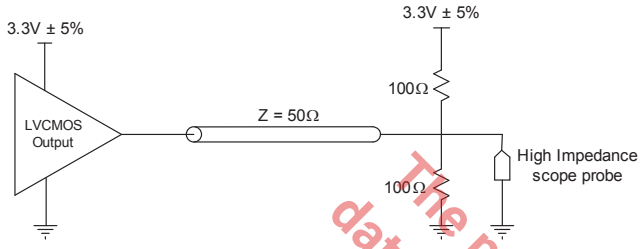

Figure 2: XR81101 3.3V LVCMOS Output Termination

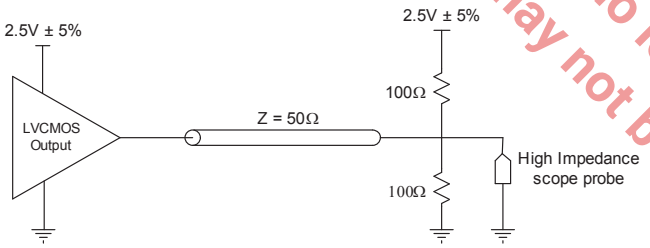

Figure 3: XR81101 2.5V LVCMOS Output Termination

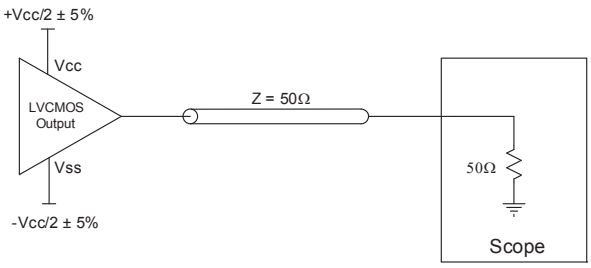

Figure 4: XR81101 Split Supply LVCMOS Output Termination

Output Signal Timing Definitions

The following diagrams clarify the common definitions of the AC timing measurements.

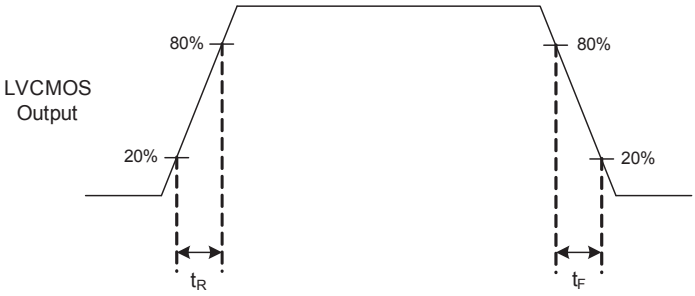

Figure 5: Cycle-to-Cycle Jitter

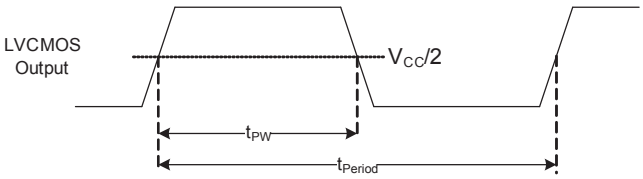

$$Odc = \frac{t_{PW}}{t_{Period}} \times 100\%$$

Figure 6: Output Rise/Fall Time

The product (or products) mentioned in this data sheet are no longer being manufactured and may not be ordered (OBS)

Mechanical Dimensions

8-Pin TSSOP

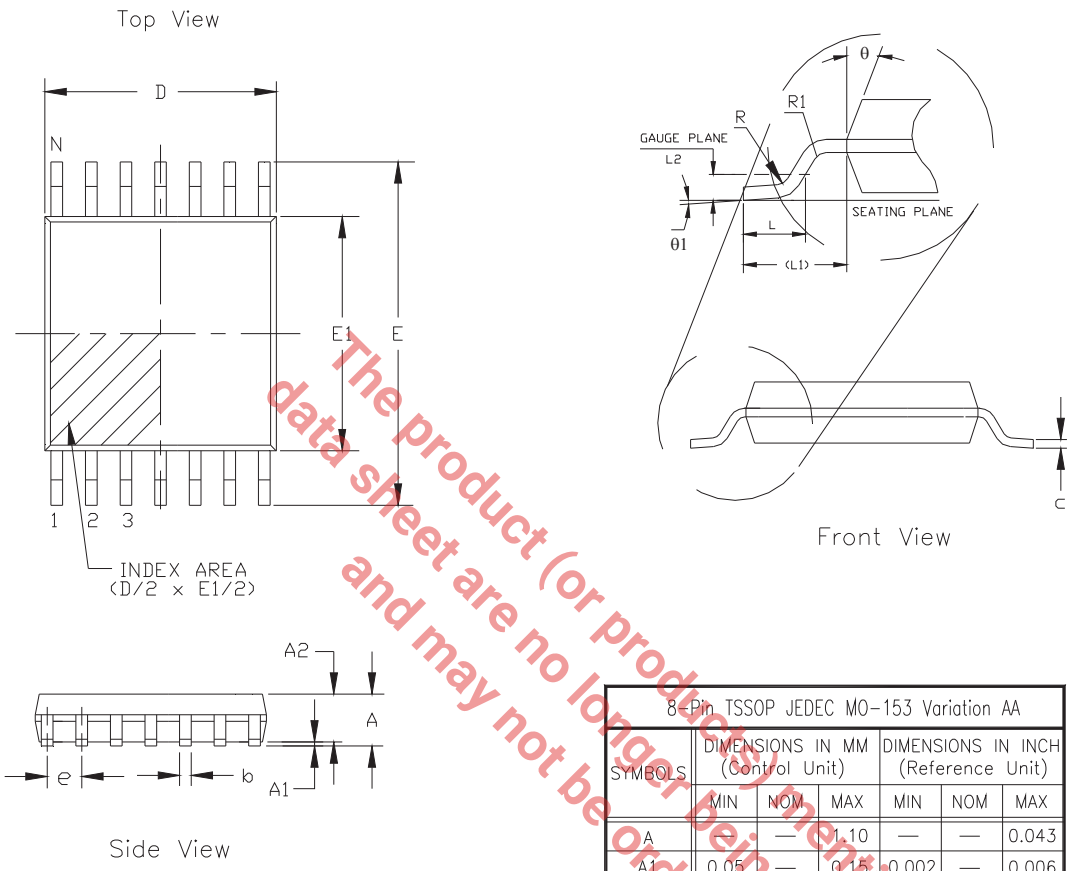

The product (or products) mentioned in this data sheet are no longer being manufactured and may not be ordered (OBS)

8-Pin TSSOP JEDEC MO-153 Variation AA						
SYMBOLS	DIMENSIONS IN MM (Control Unit)			DIMENSIONS IN INCH (Reference Unit)		
	MIN	NOM	MAX	MIN	NOM	MAX
A	—	—	1.10	—	—	0.043
A1	0.05	—	0.15	0.002	—	0.006
A2	0.85	0.90	0.95	0.033	0.035	0.037
b	0.19	—	0.30	0.007	—	0.012
c	0.09	—	0.20	0.004	—	0.008
E	6.40 BSC			0.252 BSC		
E1	4.30	4.40	4.50	0.169	0.173	0.177
e	0.65 BSC			0.026 BSC		
L	0.50	0.60	0.75	0.020	0.024	0.030
L1	1.00 REF			0.039 REF		
L2	0.25 BSC			0.010 BSC		
R	0.09	—	—	0.035	—	—
R1	0.09	—	—	0.035	—	—
θ	12° REF			12° REF		
θ1	0°	—	8°	0°	—	8°
D	2.90	3.00	3.10	0.114	0.118	0.122
N	8			8		

RECOMMENDED PCB LAND PATTERN

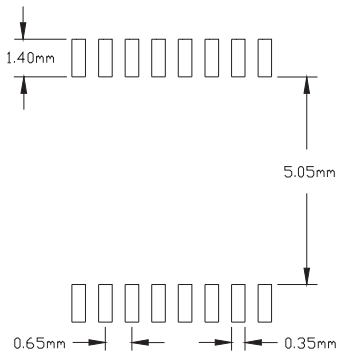

Note: The side, top and landing pattern drawings are general to TSSOP packaging but the table is specific to the 8pin TSSOP.

© 2014 Exar Corporation

Ordering Information

Part Number	Package	Green	Operating Temperature Range	Shipping Packaging	Marking
XR81101-AA02-F	8-pin TSSOP	Yes	-40°C to +85°C	Tube	T01
XR81101-AA02TR-F	8-pin TSSOP	Yes	-40°C to +85°C	Tape & Reel	T01
XR81101EVB	Eval Board	N/A	N/A	N/A	N/A

Revision History

Revision	Date	Description
1A	April 2014	Initial release. [ECN1416-07 I 04/18/2014]

The product (or products) mentioned in this data sheet are no longer being manufactured and may not be ordered (OBS)

For Further Assistance:

Email: commtechsupport@exar.com

Exar Technical Documentation: http://www.exar.com/techdoc/

Exar Corporation Headquarters and Sales Offices
48720 Kato Road
Fremont, CA 95438 - USA
Tel: +1 (510) 668-7000
Fax: +1 (510) 668-7001

A New Direction in Mixed-Signal

NOTICE

EXAR Corporation reserves the right to make changes to the products contained in this publication in order to improve design, performance or reliability. EXAR Corporation assumes no responsibility for the use of any circuits described herein, conveys no license under any patent or other right, and makes no representation that the circuits are free of patent infringement. Charts and schedules contained herein are only for illustration purposes and may vary depending upon a user's specific application. While the information in this publication has been carefully checked; no responsibility, however, is assumed for inaccuracies.

EXAR Corporation does not recommend the use of any of its products in life support applications where the failure or malfunction of the product can reasonably be expected to cause failure of the life support system or to significantly affect its safety or effectiveness. Products are not authorized for use in such applications unless EXAR Corporation receives, in writing, assurances to its satisfaction that: (a) the risk of injury or damage has been minimized; (b) the user assumes all such risks; (c) potential liability of EXAR Corporation is adequately protected under the circumstances.

Reproduction, in part or whole, without the prior written consent of EXAR Corporation is prohibited.