RJ45, Single Port, 10/100/1G/5G Base-T Magnetics Module



ARJM11 Series

Request Samples | Check Inventory

21.30 x 15.90 x 13.60mm
RoHS/RoHS II Compliant
MSL Level = 1

Features

- IEEE 802.3 compliant and UL certified
- High-performance integrated magnetics for EMI suppression
- Suitable for CAT5 and CAT6 UTP cabling
- RoHS peak wave solder temperature rating 265°C
- Extended operating temperature -40 to 85°C option

Applications

- Single port 10/100/1G/5G Base-T LAN
- Network Interface Cards
- Switches/Routers
- Network attached storage
- Servers, NIC's
- Media converters

Electrical Specifications

Parameters	Minimum	Typical	Maximum	Units	Notes
Turn Ratio (±3%)		1CT:1CT			100kHz, 0.1V
Inductance	350			µH	100kHz, 0.1V, 8mADC
	200				For 2.5G Base-T only
	160				For 5G Base-T only
Operating Temperature	-40		+85	°C	See options
Storage Temperature	-40		+85	°C	
HiPOT		2250		VDC	VDC for 60 sec.
100 Base-T					
Insertion Loss			-1.0	dB	0.3-100MHz
Return Loss	-18			dB	1-30MHz
	-13				30-60MHz
	-10				60-100MHz
Crosstalk	-30			dB	1-1000MHz
CMRR	-30			dB	1-100MHz
100 Base-T PoE, PoE+					
Insertion Loss			-1.1	dB	0.5-100MHz
Return Loss	-18			dB	0.5-30MHz
	-15				30-60MHz
	-12				60-80MHz
Crosstalk	-35			dB	0.5-40MHz
	-30				40-100MHz
CMRR	-30			dB	0.5-100MHz
DC Resistance			1.0	Ω	Secondary (cable) side
POE Balanced DC line current			350	mA	@57VDC continuous
			500		@57VDC for 200ms
POE+ Balanced DC line current			600	mA	@57VDC continuous
			720		@57VDC for 200ms

ABRACON

12117 Bee Caves Rd, Bldg-3, Suite 200
Bee Cave, TX 78738
Phone: 512-371-6159 Fax: 512-351-8858
For terms and conditions of sales, please visit:
www.abracon.com

REVISION G : 10/15/2026

ABRACON IS ISO9001-2015 CERTIFIED

RJ45, Single Port, 10/100/1G/5G Base-T Magnetics Module



ARJM11 Series

Request Samples | Check Inventory

21.30 x 15.90 x 13.60mm
RoHS/RoHS II Compliant
MSL Level = 1

Parameters	Minimum	Typical	Maximum	Units	Notes
1000 Base-T					
Insertion Loss	-		-1.1	dB	0.3-100MHz
Return Loss	-16			dB	1-30MHz
	-13				30-60MHz
	-10				60-100MHz
Crosstalk	-30			dB	1-100MHz
CMRR	-30			dB	1-100MHz
2.5G Base-T					
Insertion Loss			-1.0	dB	1-50MHz
			-1.5		50-125MHz
Return Loss	-18			dB	1-40MHz
	-18+15log(f/40)†				40-250MHz
Crosstalk	-35			dB	1-40MHz
	-35+15log(f/40)†				40-125MHz
CMRR	-30			dB	1-200MHz
5G Base-T					
Insertion Loss	-0.5			dB	1-50MHz
	-1.0				50-125MHz
	-2.0				125-200MHz
	-2.5				200-250MHz
Return Loss	-20			dB	1-50MHz
	-20+15log(f/40)†				50-250MHz
Crosstalk	-25			dB	1-125MHz
	-20				125-250MHz
CMRR	-23			dB	1-250MHz

†f represents the test frequency specified in MHz

ARJM11 Series is RoHS/RoHS II Compliant

MSL level: 1

UL Certification Number: E503350

ABRACON

12117 Bee Caves Rd, Bldg-3, Suite 200
Bee Cave, TX 78738
Phone: 512-371-6159 Fax: 512-351-8858
For terms and conditions of sales, please visit:
www.abracon.com

REVISION G : 10/15/2026

ABRACON IS ISO9001-2015 CERTIFIED

RJ45, Single Port, 10/100/1G/5G Base-T Magnetics Module



ARJM11 Series

Request Samples | Check Inventory

21.30 x 15.90 x 13.60mm
RoHS/RoHS II Compliant
MSL Level = 1

Part Number Identification

ARJM11 □□-□-□□-□□□-□

ARJM11	Mechanical	Pin Layout	Schematic	Left LED Color	Right LED Color	Operating Temp	Solder Method	Gold Plating	Packaging
	A: Tab down, w/ EMI Fingers	1: For A and B	009: 100 Base-T	N: No LED	N: No LED	C: 0 ~ 70 °C	W: Wave	2: 6u"	Blank: Bulk
	B: Tab down, w/o EMI Fingers	3: For A and B	114: 100 Base-T POE	A: Green	A: Green	E: -40 ~ 85 °C	R: Reflow		T: Tape&Reel**
	C: Tab up, w/ EMI Fingers	7: For C and D	104: 100 Base-T POE+	B: Yellow	B: Yellow				
	D: Tab up, w/o EMI Fingers		502: 1000 Base-T	K: Green/Orange	K: Green/Orange				
	See Mechanical Dimension Section for Details		805: 2.5G Base-T Option 1	J: Green/Yellow	J: Green/Yellow				
			809: 2.5G Base-T Option 2						
			811: 5G Base-T						
			See Schematic Section for Details						

Not all combinations are supported. Please see the tables on the next pages for available part numbers.

**Part numbers containing 'R' in the suffix refers to the reflow soldering method. These devices are available in bulk/tray and T&R packaging. See available parts list below and the Packaging section for more detail.

RJ45, Single Port, 10/100/1G/5G Base-T Magnetics Module



ARJM11 Series

Request Samples Check Inventory

21.30 x 15.90 x 13.60mm
RoHS/RoHS II Compliant
MSL Level = 1

Available Part Numbers

100 Base-T Standard Part Numbers

Part Number	Speed	Tab Direction	LED (Left:Right)	Operating Temp	Solder Method	Pkg Format
ARJM11A1-009-AB-ER2	100 Base-T	Tab Down	G : Y	-40°C ~ 85°C	Reflow	B, C
ARJM11A1-009-AB-EW2	100 Base-T	Tab Down	G : Y	-40°C ~ 85°C	Wave	A
ARJM11A1-009-AB-EW4	100 Base-T	Tab Down	G : Y	-40°C ~ 85°C	Wave	A
ARJM11A1-009-NN-ER3	100 Base-T	Tab Down	No LED	-40°C ~ 85°C	Reflow	B, C
ARJM11A1-009-NN-EW2	100 Base-T	Tab Down	No LED	-40°C ~ 85°C	Wave	A
ARJM11A3-009-AB-ER2	100 Base-T	Tab Down	G : Y	-40°C ~ 85°C	Reflow	B, C
ARJM11B1-009-AB-EW2	100 Base-T	Tab Down	G : Y	-40°C ~ 85°C	Wave	A
ARJM11B1-009-NN-ER2	100 Base-T	Tab Down	No LED	-40°C ~ 85°C	Reflow	B, C
ARJM11B1-009-NN-EW2	100 Base-T	Tab Down	No LED	-40°C ~ 85°C	Wave	A
ARJM11C7-009-AB-EW2	100 Base-T	Tab Up	G : Y	-40°C ~ 85°C	Wave	A
ARJM11C7-009-KB-EW2	100 Base-T	Tab Up	G/O : Y	-40°C ~ 85°C	Wave	A
ARJM11C7-009-NN-EW2	100 Base-T	Tab Up	No LED	-40°C ~ 85°C	Wave	A
ARJM11D7-009-AB-EW2	100 Base-T	Tab Up	G : Y	-40°C ~ 85°C	Wave	A
ARJM11D7-009-NN-EW2	100 Base-T	Tab Up	No LED	-40°C ~ 85°C	Wave	A

100 Base-T POE and POE+ Standard Part Numbers

Part Number	Speed	Tab Direction	LED (Left:Right)	Operating Temp	Solder Method	Pkg Format
ARJM11C7-104-AB-EW2	100 Base-T POE+	Tab Up	G : Y	-40°C ~ 85°C	Wave	B, C
ARJM11C7-104-BA-EW2	100 Base-T POE+	Tab Up	Y : G	-40°C ~ 85°C	Wave	B, C
ARJM11C7-114-BA-EW2	100 Base-T POE	Tab Up	Y : G	-40°C ~ 85°C	Wave	B, C
ARJM11C7-114-NN-CW2	100 Base-T POE	Tab Up	No LED	0°C ~ 70°C	Wave	B, C
ARJM11D7-104-AB-EW2	100 Base-T POE+	Tab Up	G : Y	-40°C ~ 85°C	Wave	B, C
ARJM11D7-114-AB-ER2	100 Base-T POE	Tab Up	G : Y	-40°C ~ 85°C	Reflow	B, C
ARJM11D7-114-AB-EW2	100 Base-T POE	Tab Up	G : Y	-40°C ~ 85°C	Wave	B, C
ARJM11D7-114-NN-EW4	100 Base-T POE	Tab Up	No LED	-40°C ~ 85°C	Wave	B, C

RJ45, Single Port, 10/100/1G/5G Base-T Magnetics Module



ARJM11 Series

Request Samples Check Inventory

21.30 x 15.90 x 13.60mm
RoHS/RoHS II Compliant
MSL Level = 1

1000 Base-T Standard Part Numbers

Part Number	Speed	Tab Direction	LED (Left:Right)	Operating Temp	Solder Method	Pkg Method
ARJM11A1-502-AB-CW2	1000 Base-T	Tab Down	G : Y	0°C ~ 70°C	Wave	A
ARJM11A1-502-AB-ER2	1000 Base-T	Tab Down	G : Y	-40°C ~ 85°C	Reflow	B, C
ARJM11A1-502-AB-EW2	1000 Base-T	Tab Down	G : Y	-40°C ~ 85°C	Wave	A
ARJM11A1-502-JJ-EW2	1000 Base-T	Tab Down	G/Y : G/Y	-40°C ~ 85°C	Wave	A
ARJM11A1-502-NN-EW2	1000 Base-T	Tab Down	No LED	-40°C ~ 85°C	Wave	A
ARJM11B1-502-AB-EW2	1000 Base-T	Tab Down	G : Y	-40°C ~ 85°C	Wave	A
ARJM11B1-502-NN-EW2	1000 Base-T	Tab Down	No LED	-40°C ~ 85°C	Wave	A
ARJM11C7-502-AB-ER2	1000 Base-T	Tab Up	G : Y	-40°C ~ 85°C	Reflow	B, C
ARJM11C7-502-AB-EW2	1000 Base-T	Tab Up	G : Y	-40°C ~ 85°C	Wave	A
ARJM11C7-502-KB-EW2	1000 Base-T	Tab Up	G/O : Y	-40°C ~ 85°C	Wave	A
ARJM11C7-502-NN-EW2	1000 Base-T	Tab Up	No LED	-40°C ~ 85°C	Wave	A
ARJM11D7-502-AB-EW2	1000 Base-T	Tab Up	G : Y	-40°C ~ 85°C	Wave	A
ARJM11D7-502-NN-EW2	1000 Base-T	Tab Up	No LED	-40°C ~ 85°C	Wave	A

2.5 Base-T Standard Part Numbers

Part Number	Speed	Tab Direction	LED (Left:Right)	Operating Temp	Solder Method	Pkg Format
ARJM11A1-805-AB-EW2	2.5G Base-T	Tab Down	G : Y	-40°C ~ 85°C	Wave	A
ARJM11B1-805-AB-EW2	2.5G Base-T	Tab Down	G : Y	-40°C ~ 85°C	Wave	A
ARJM11B1-805-KB-CW2	2.5G Base-T	Tab Down	G/O : Y	0°C ~ 70°C	Wave	A
ARJM11B1-805-KB-EW2	2.5G Base-T	Tab Down	G/O : Y	-40°C ~ 85°C	Wave	A
ARJM11C7-809-AB-EW2	2.5G Base-T	Tab Up	G : Y	-40°C ~ 85°C	Wave	A
ARJM11D7-809-AB-EW2	2.5G Base-T	Tab Up	G : Y	-40°C ~ 85°C	Wave	A

5G Base-T Standard Part Numbers

Part Number	Speed	Tab Direction	LED (Left:Right)	Operating Temp	Solder Method	Pkg Format
ARJM11A1-811-AB-EW2	5G Base-T	Tab Down	G : Y	-40°C ~ 85°C	Wave	A
ARJM11B1-811-AB-EW2	5G Base-T	Tab Down	G : Y	-40°C ~ 85°C	Wave	A
ARJM11C7-811-AB-EW2	5G Base-T	Tab Up	G : Y	-40°C ~ 85°C	Wave	A
ARJM11D7-811-AB-EW2	5G Base-T	Tab Up	G : Y	-40°C ~ 85°C	Wave	A

ABRACON

12117 Bee Caves Rd, Bldg-3, Suite 200
Bee Cave, TX 78738
Phone: 512-371-6159 Fax: 512-351-8858
For terms and conditions of sales, please visit:
www.abracon.com

REVISION G : 10/15/2026

ABRACON IS ISO9001-2015 CERTIFIED

RJ45, Single Port, 10/100/1G/5G Base-T Magnetics Module



ARJM11 Series

Request Samples Check Inventory

21.30 x 15.90 x 13.60mm
RoHS/RoHS II Compliant
MSL Level = 1

Materials

1. **Housing:**
   Material:
   PBT or PA9T, UL94V-0
   Color: Black or Grey

2. **Contact Pin:**
   Material: Phosphor Bronze
   Plating (1): Nickel
   Plating (2): 100%Sn

3. **Insert:**
   Material:
   PBT, UL94V-0

   Contact Material: Phosphor Bronze
   Plating (1): Nickel
   Plating (2): Gold, 6u”

4. **LED:**
   Material: Diffused Epoxy Lens, 0.5x0.5mm
   Carbon Steel wireframe leads

5. **Metal Shell:**
   Material: Brass
   Plating (1): Nickel

Note: Abracon LLC will not alter any material composition, without prior written notification.

RJ45, Single Port, 10/100/1G/5G Base-T Magnetics Module



ARJM11 Series

Request Samples | Check Inventory

21.30 x 15.90 x 13.60mm
RoHS/RoHS II Compliant
MSL Level = 1

Mechanical Specifications

A: Tab Down, w/ EMI Fingers (Wave)

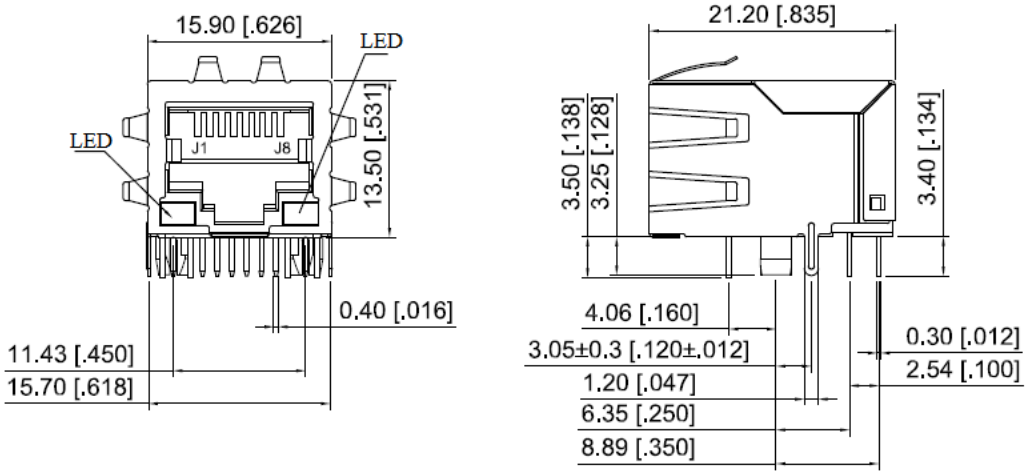

Dimensions: mm[inch] (Unless otherwise specified, all tolerances are ±0.25[0.010])

A: Tab Down, w/ EMI Fingers (Reflow)

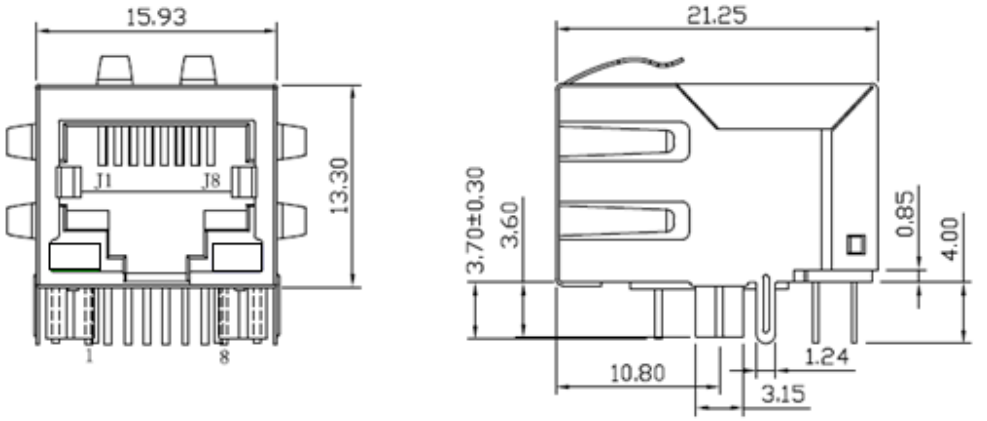

Dimensions are in mm. Tolerances are ±0.25mm unless noted otherwise.

ABRACON

12117 Bee Caves Rd, Bldg-3, Suite 200
Bee Cave, TX 78738
Phone: 512-371-6159 Fax: 512-351-8858
For terms and conditions of sales, please visit:
www.abracon.com

REVISION G : 10/15/2026

ABRACON IS
ISO9001-2015
CERTIFIED

RJ45, Single Port, 10/100/1G/5G Base-T Magnetics Module



ARJM11 Series

Request Samples Check Inventory

21.30 x 15.90 x 13.60mm
RoHS/RoHS II Compliant
MSL Level = 1

B: Tab Down, w/o EMI Fingers (Wave)

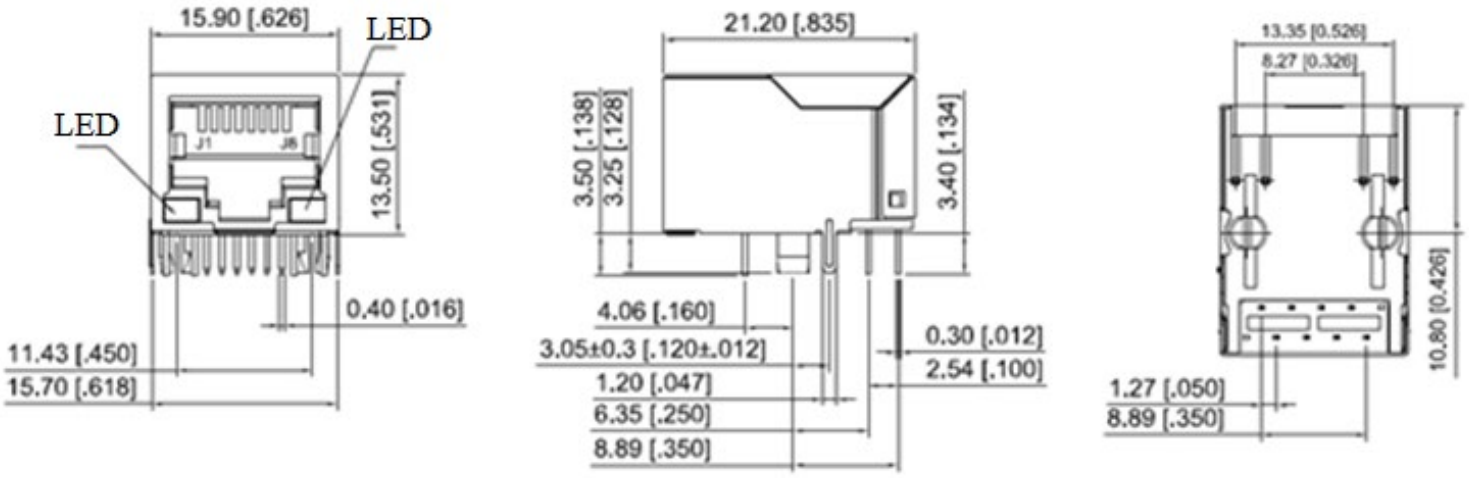

Dimensions: mm[inch] (Unless otherwise specified, all tolerances are ±0.25[0.010])

B: Tab Down, w/o EMI Fingers (Reflow)

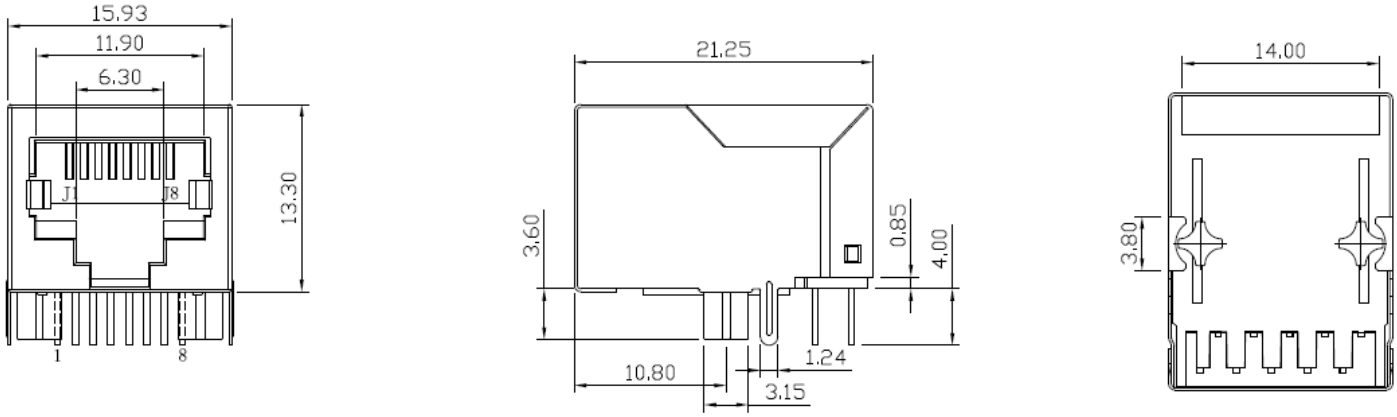

Dimensions are in mm. Tolerances are ±0.25mm unless noted otherwise.

ABRACON

12117 Bee Caves Rd, Bldg-3, Suite 200
Bee Cave, TX 78738
Phone: 512-371-6159 Fax: 512-351-8858
For terms and conditions of sales, please visit:
www.abracon.com

REVISION G : 10/15/2026

ABRACON IS
ISO9001-2015
CERTIFIED

RJ45, Single Port, 10/100/1G/5G Base-T Magnetics Module



ARJM11 Series

Request Samples | Check Inventory

21.30 x 15.90 x 13.60mm
RoHS/RoHS II Compliant
MSL Level = 1

C: Tab Up, w/ EMI Fingers (Wave)

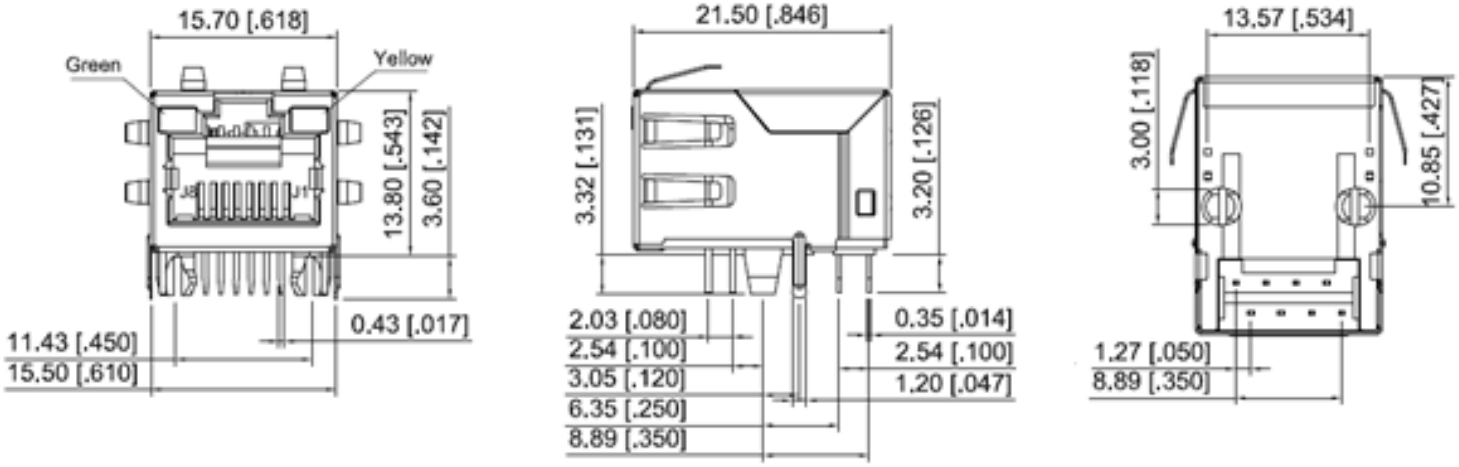

Dimensions: mm[inch] (Unless otherwise specified, all tolerances are ±0.25[0.010])

C: Tab Up, w/ EMI Fingers (Reflow)

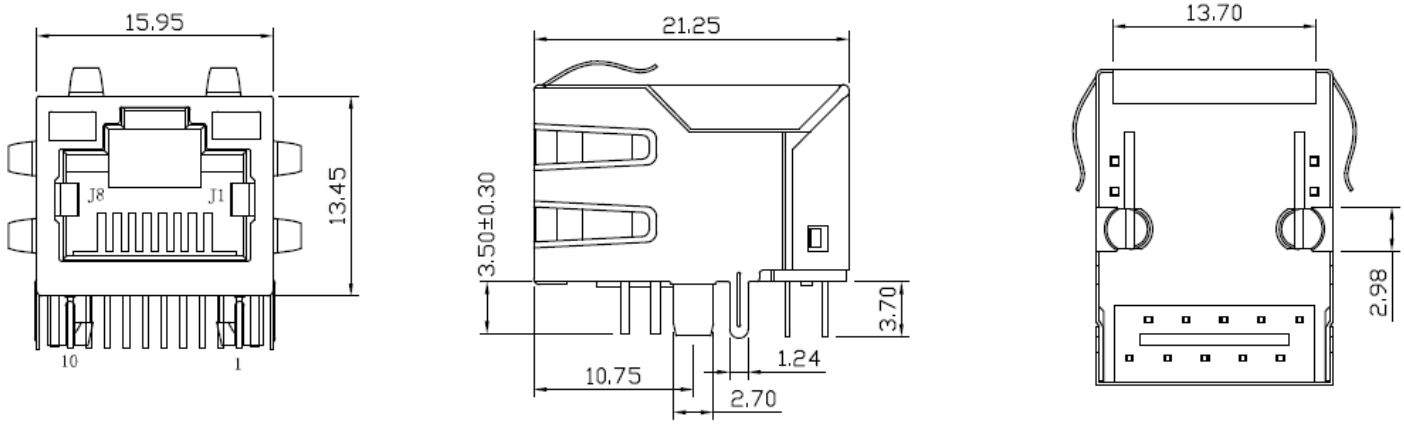

Dimensions are in mm. Tolerances are ±0.25mm unless noted otherwise.

ABRACON

12117 Bee Caves Rd, Bldg-3, Suite 200
Bee Cave, TX 78738
Phone: 512-371-6159 Fax: 512-351-8858
For terms and conditions of sales, please visit:
www.abracon.com

REVISION G : 10/15/2026

ABRACON IS ISO9001-2015 CERTIFIED

RJ45, Single Port, 10/100/1G/5G Base-T Magnetics Module



ARJM11 Series

Request Samples | Check Inventory

21.30 x 15.90 x 13.60mm
RoHS/RoHS II Compliant
MSL Level = 1

D: Tab Up, w/o EMI Fingers 8 Pin and 10 Pin (Wave)

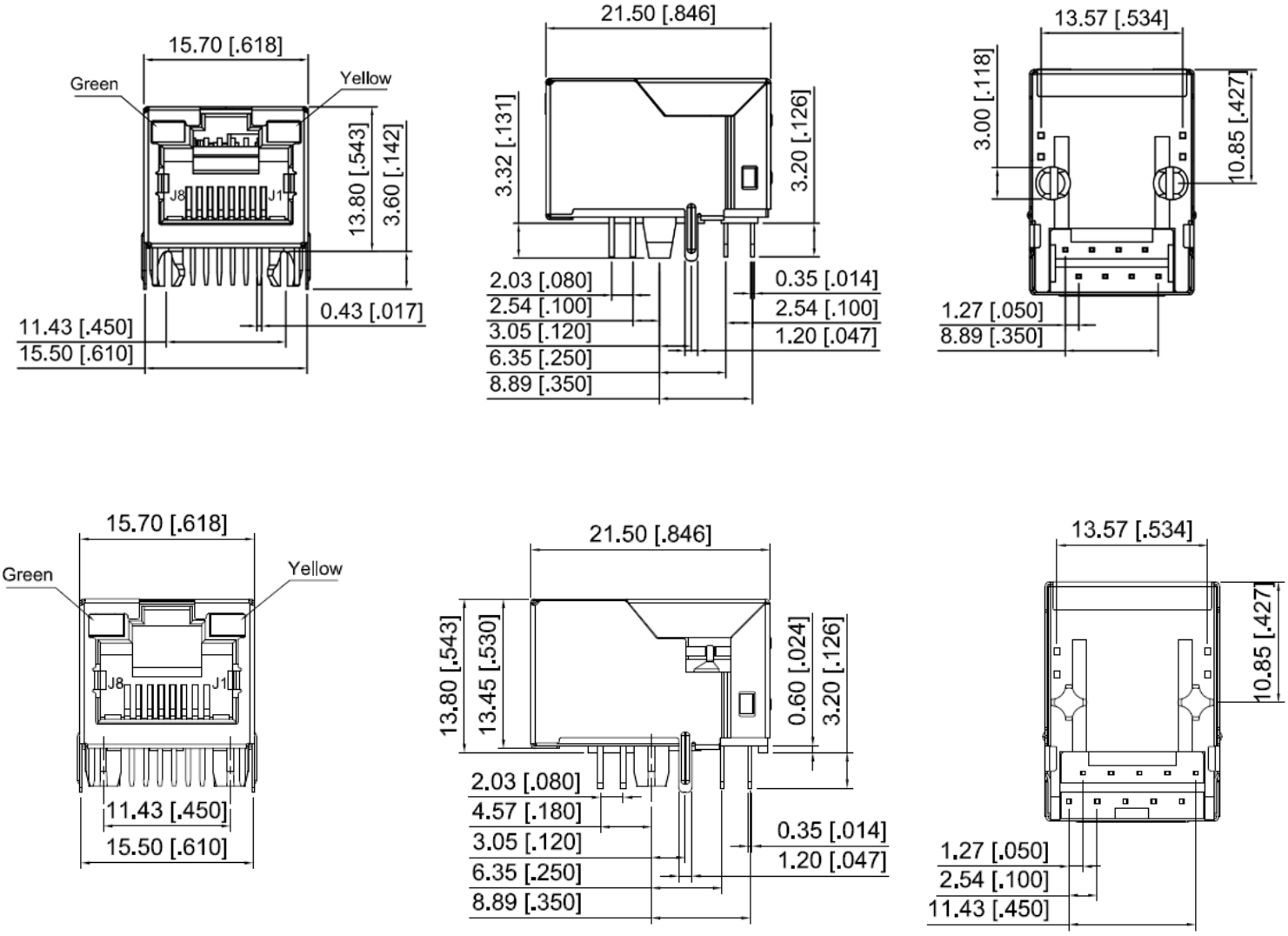

Dimensions: mm[inch] (Unless otherwise specified, all tolerances are ±0.25[0.010])

ABRACON

12117 Bee Caves Rd, Bldg-3, Suite 200
Bee Cave, TX 78738
Phone: 512-371-6159 Fax: 512-351-8858
For terms and conditions of sales, please visit:
www.abracon.com

REVISION G : 10/15/2026

ABRACON IS
ISO9001-2015
CERTIFIED

RJ45, Single Port, 10/100/1G/5G Base-T Magnetics Module



ARJM11 Series

Request Samples | Check Inventory

21.30 x 15.90 x 13.60mm
RoHS/RoHS II Compliant
MSL Level = 1

D: Tab Up, w/o EMI Fingers (Reflow)

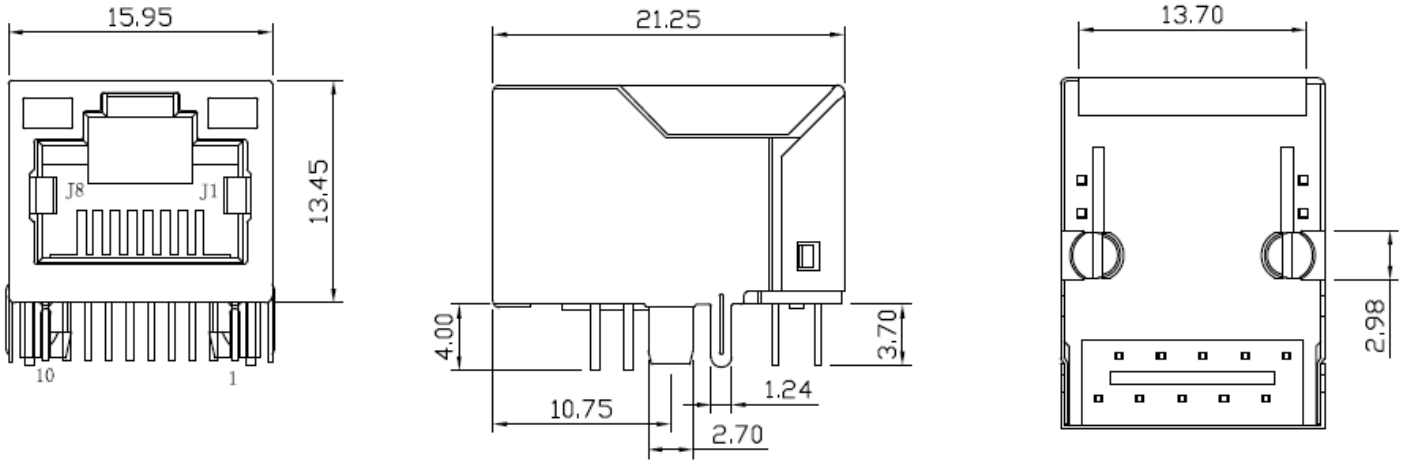

\

Dimensions are in mm. Tolerances are ±0.25mm unless noted otherwise.

ABRACON

12117 Bee Caves Rd, Bldg-3, Suite 200
Bee Cave, TX 78738
Phone: 512-371-6159 Fax: 512-351-8858
For terms and conditions of sales, please visit:
www.abracon.com

REVISION G : 10/15/2026

ABRACON IS ISO9001-2015 CERTIFIED

RJ45, Single Port, 10/100/1G/5G Base-T Magnetics Module



ARJM11 Series

Request Samples | Check Inventory

21.30 x 15.90 x 13.60mm
RoHS/RoHS II Compliant
MSL Level = 1

Recommended Layout

Pin Layout = 1 (Horizontal LEDs/ No LEDs)

8 Pins, no LED
For 100 Base-T

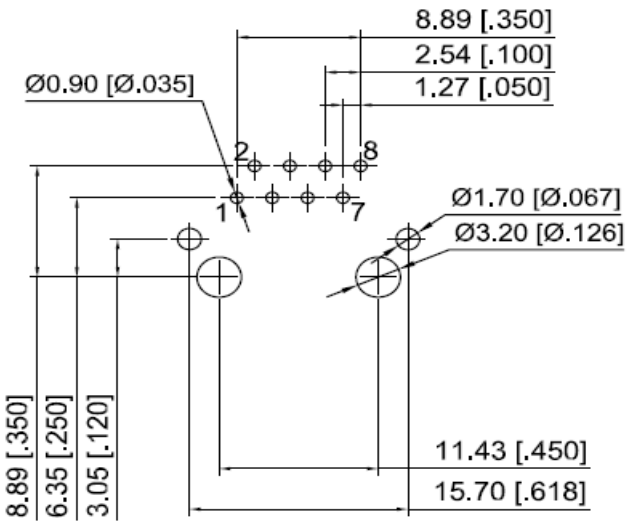

8 Pins, w/ LED
For 100 Base-T

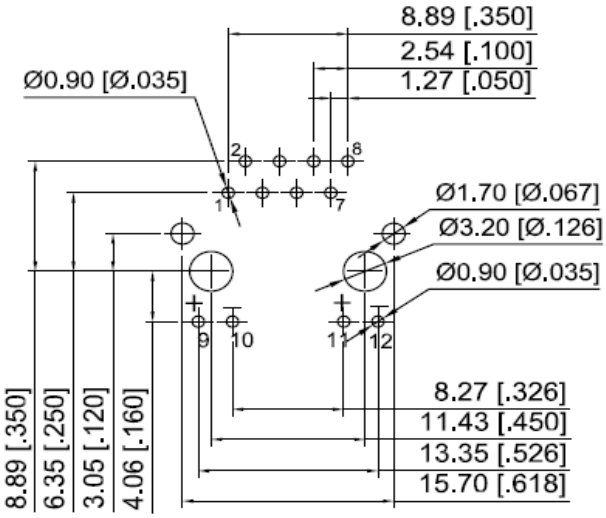

10 Pins, no LED
For 100 PoE/1000/2.5G/5G Base-T

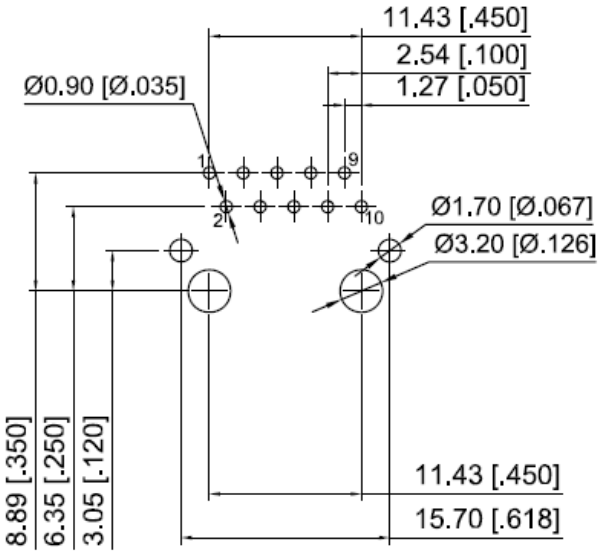

10 Pins, w/ LED
For 100 PoE/1000/2.5G/5G Base-T

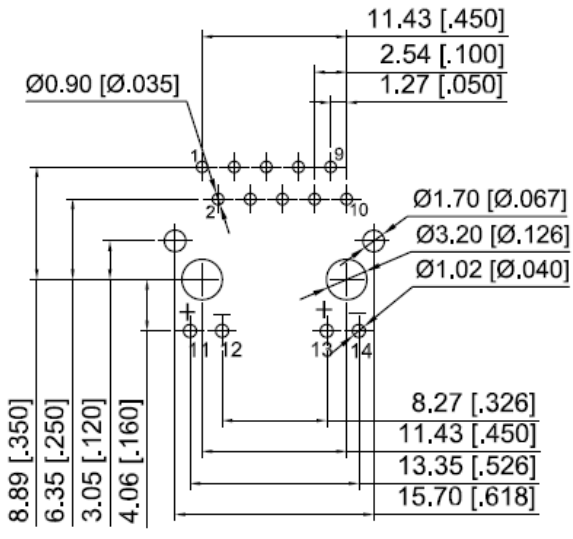

Dimensions: mm[inch] Layout tolerances are ±0.05[0.002]mm unless noted otherwise.

ABRACON

12117 Bee Caves Rd, Bldg-3, Suite 200
Bee Cave, TX 78738
Phone: 512-371-6159 Fax: 512-351-8858
For terms and conditions of sales, please visit:
www.abracon.com

REVISION G : 10/15/2026

ABRACON IS
ISO9001-2015
CERTIFIED

RJ45, Single Port, 10/100/1G/5G Base-T Magnetics Module



ARJM11 Series

Request Samples | Check Inventory

21.30 x 15.90 x 13.60mm
RoHS/RoHS II Compliant
MSL Level = 1

Pin Layout = 3 (diagonal LEDs)

8 Pins, w/ LEDs
For 100 Base-T

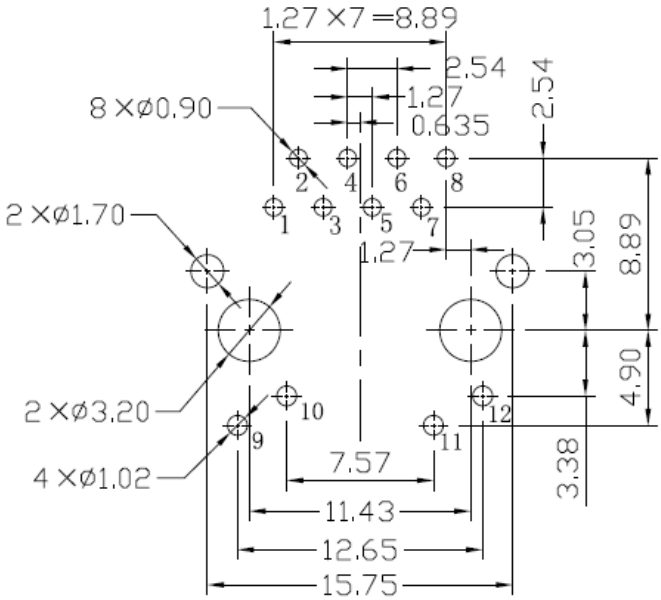

Suggested PCB Layout (Top View)

Dimensions: mm. Layout tolerances are ±0.05mm unless noted otherwise.

ABRACON

12117 Bee Caves Rd, Bldg-3, Suite 200
Bee Cave, TX 78738
Phone: 512-371-6159 Fax: 512-351-8858
For terms and conditions of sales, please visit:
www.abracon.com

REVISION G : 10/15/2026

ABRACON IS
ISO9001-2015
CERTIFIED

RJ45, Single Port, 10/100/1G/5G Base-T Magnetics Module



ARJM11 Series

Request Samples | Check Inventory

21.30 x 15.90 x 13.60mm
RoHS/RoHS II Compliant
MSL Level = 1

Pin Layout = 7 (Vertical LEDs/ No LEDs)

8 Pins, no LED
For 100 Base-T

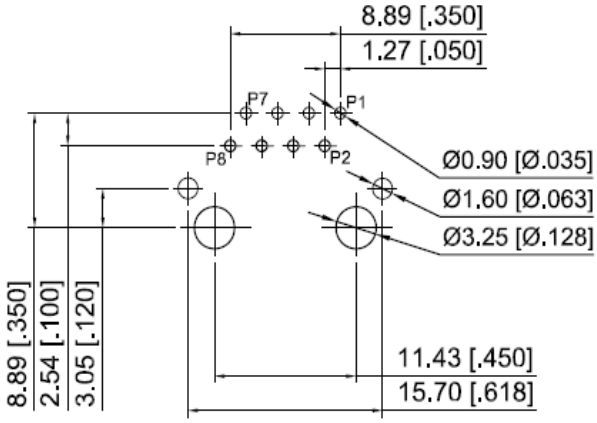

8 Pins, w/ LED
For 100 Base-T

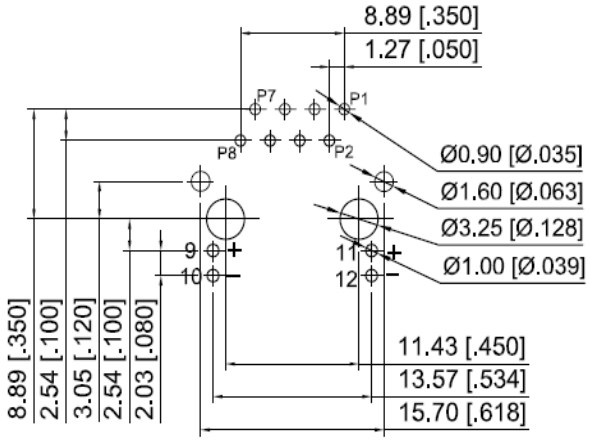

10 Pins, no LED
For 100/1000/2.5G/5G Base-T

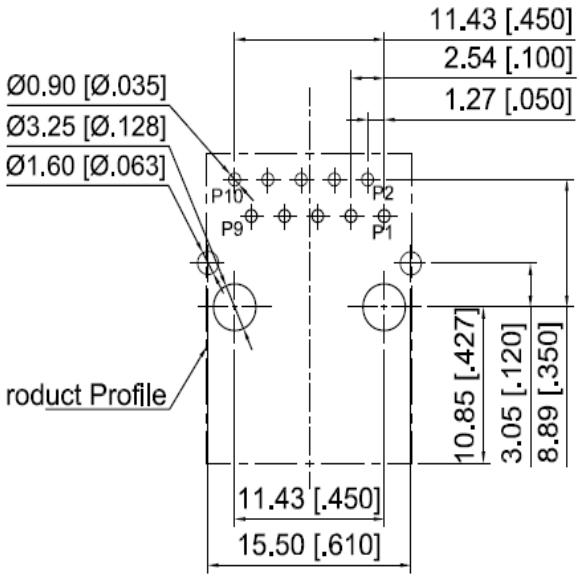

10 Pins, w/ LED
For 100/1000/2.5G/5G Base-T

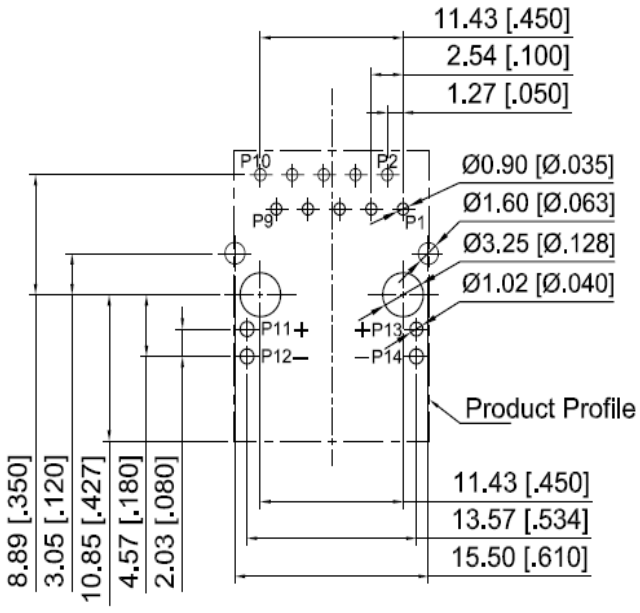

Dimensions: mm. Layout tolerances are ±0.05mm unless noted otherwise.

ABRACON

12117 Bee Caves Rd, Bldg-3, Suite 200
Bee Cave, TX 78738
Phone: 512-371-6159 Fax: 512-351-8858
For terms and conditions of sales, please visit:
www.abracon.com

REVISION G : 10/15/2026

ABRACON IS ISO9001-2015 CERTIFIED

RJ45, Single Port, 10/100/1G/5G Base-T Magnetics Module



ARJM11 Series

Request Samples Check Inventory

21.30 x 15.90 x 13.60mm
RoHS/RoHS II Compliant
MSL Level = 1

10 Pins, no LED
For 100 Base-T w/ POE, POE+

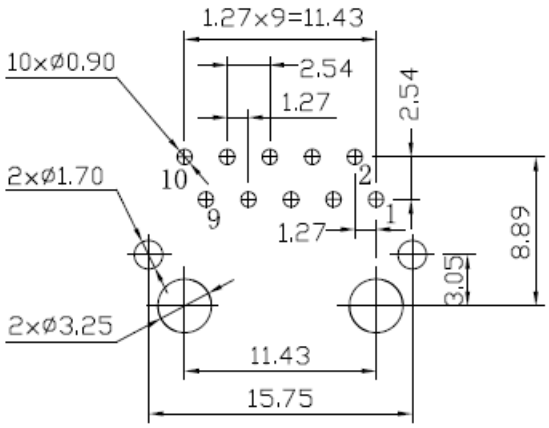

10 Pins, w/ LED
For 100 Base-T w/ POE, POE+

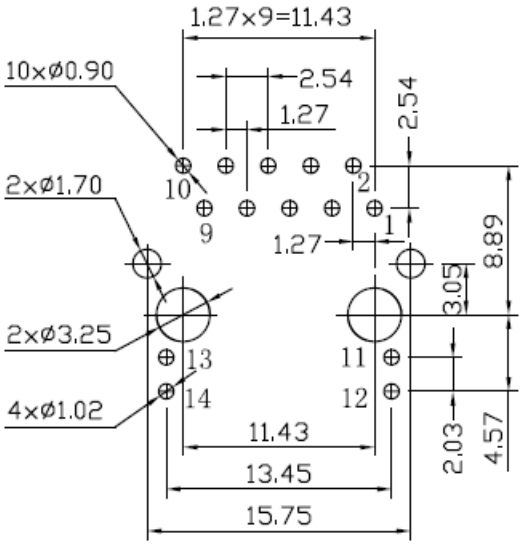

Dimensions are in mm. Layout tolerances are ±0.05mm unless noted otherwise.

ABRACON

12117 Bee Caves Rd, Bldg-3, Suite 200
Bee Cave, TX 78738
Phone: 512-371-6159 Fax: 512-351-8858
For terms and conditions of sales, please visit:
www.abracon.com

REVISION G : 10/15/2026

ABRACON IS ISO9001-2015 CERTIFIED

RJ45, Single Port, 10/100/1G/5G Base-T Magnetics Module



ARJM11 Series

Request Samples | Check Inventory

21.30 x 15.90 x 13.60mm
RoHS/RoHS II Compliant
MSL Level = 1

Schematic

009 (100 Base-T)

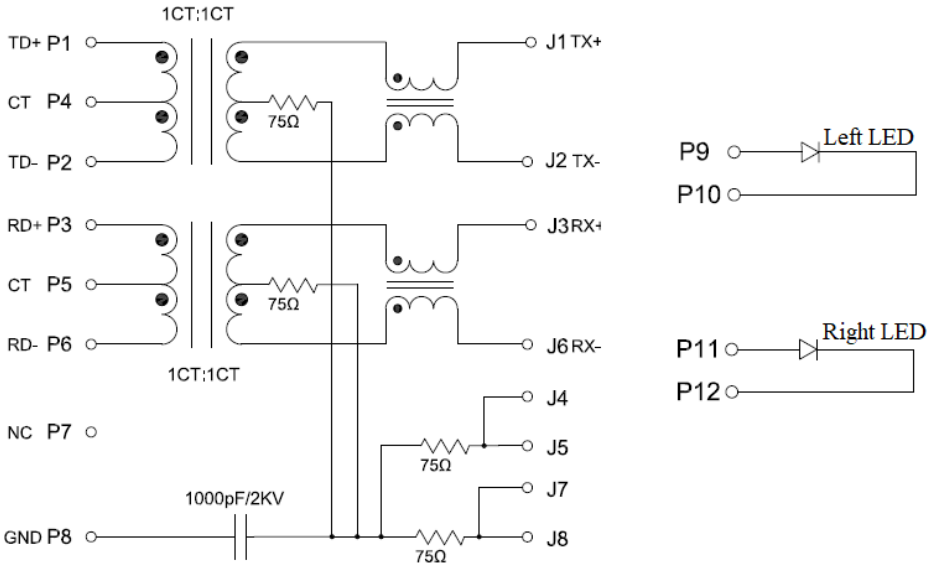

104 (100 Base-T & PoE+)

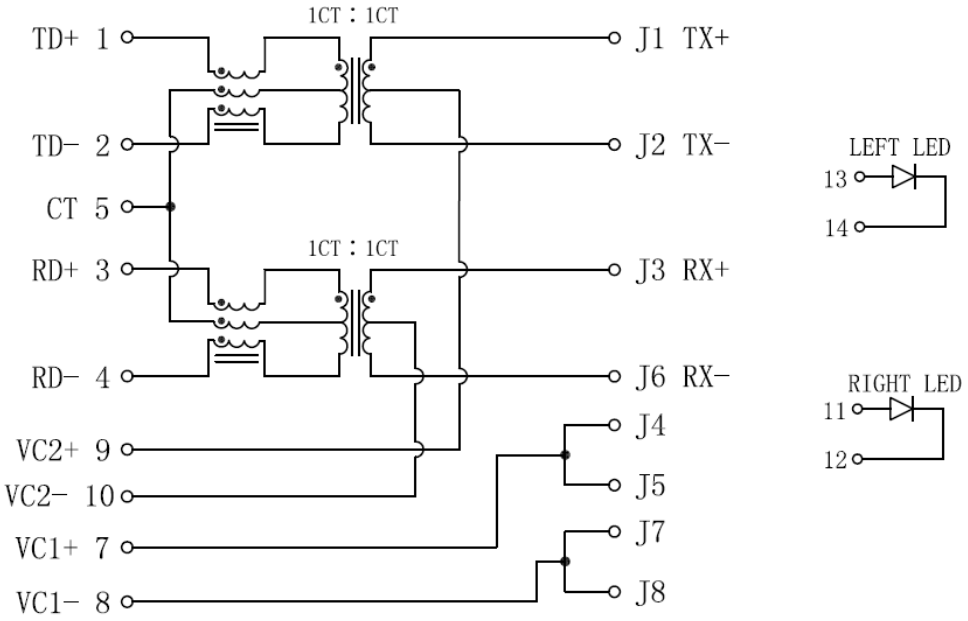

ABRACON

12117 Bee Caves Rd, Bldg-3, Suite 200
Bee Cave, TX 78738
Phone: 512-371-6159 Fax: 512-351-8858
For terms and conditions of sales, please visit:
www.abracon.com

REVISION G : 10/15/2026

ABRACON IS ISO9001-2015 CERTIFIED

RJ45, Single Port, 10/100/1G/5G Base-T Magnetics Module



ARJM11 Series

Request Samples | Check Inventory

21.30 x 15.90 x 13.60mm
RoHS/RoHS II Compliant
MSL Level = 1

114 (100 Base-T & PoE)

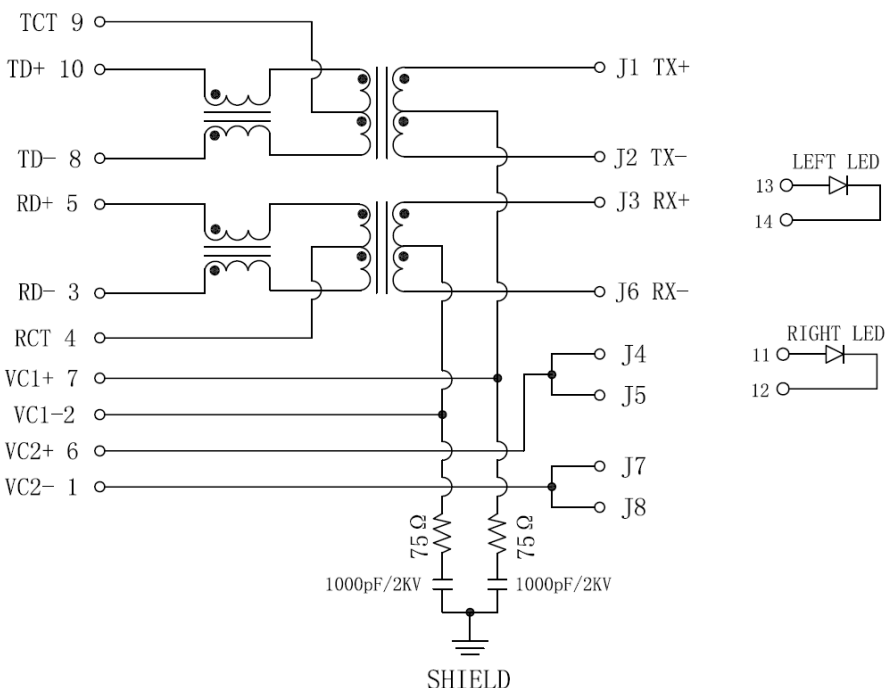

502 (1000 Base-T)

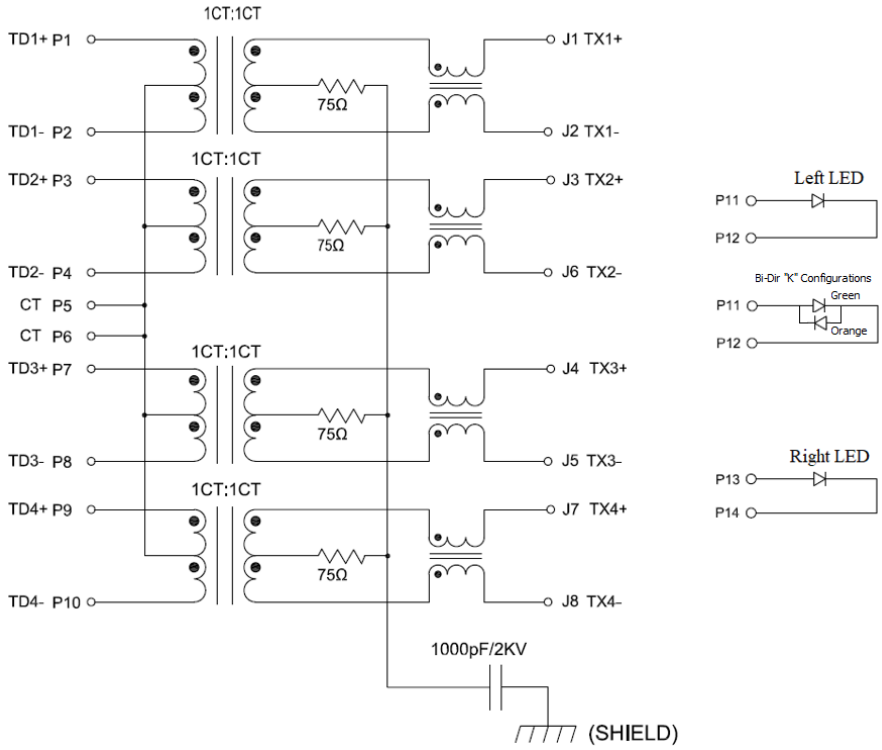

ABRACON

12117 Bee Caves Rd, Bldg-3, Suite 200
Bee Cave, TX 78738
Phone: 512-371-6159 Fax: 512-351-8858
For terms and conditions of sales, please visit:
www.abracon.com

REVISION G : 10/15/2026

ABRACON IS ISO9001-2015 CERTIFIED

RJ45, Single Port, 10/100/1G/5G Base-T Magnetics Module



ARJM11 Series

Request Samples Check Inventory

21.30 x 15.90 x 13.60mm
RoHS/RoHS II Compliant
MSL Level = 1

805 (2.5G Base-T)

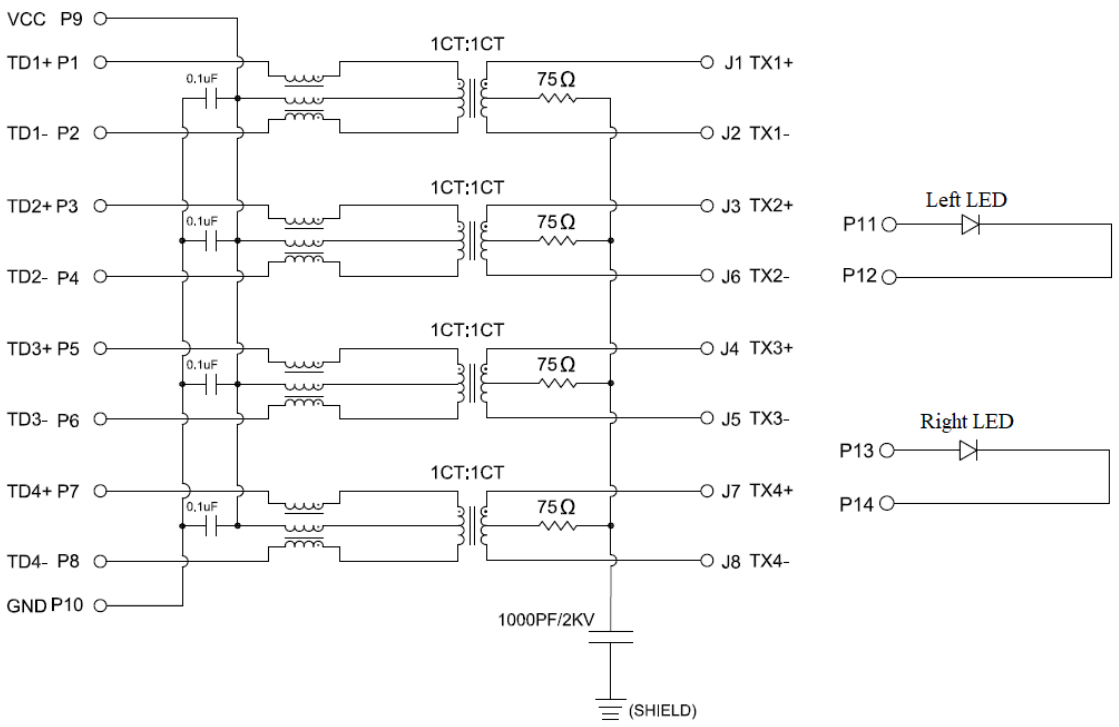

809 (2.5G Base-T)
811 (5G Base-T)

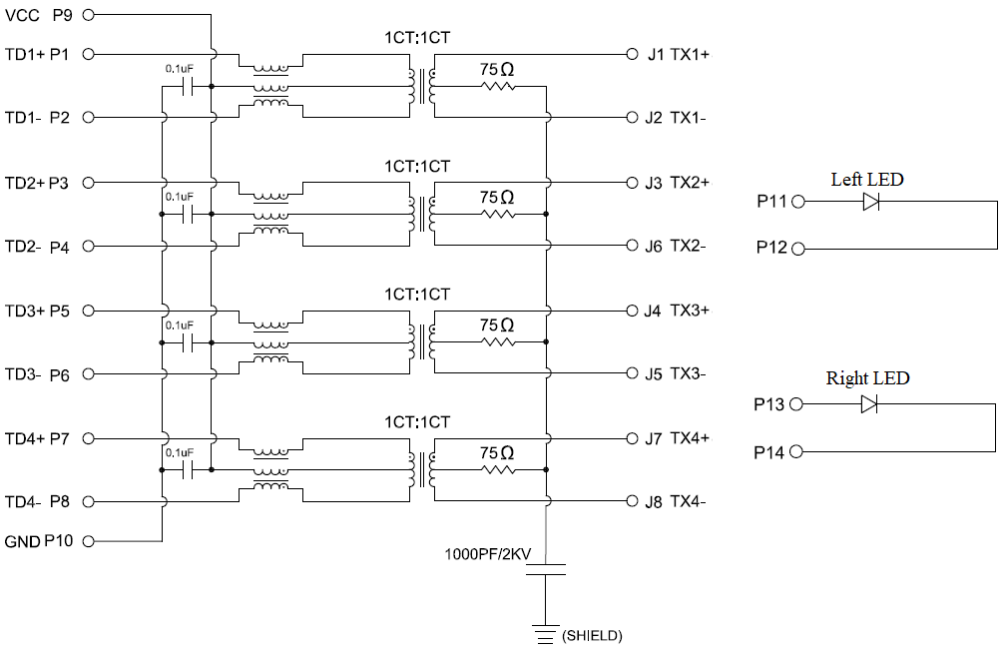

ABRACON

12117 Bee Caves Rd, Bldg-3, Suite 200
Bee Cave, TX 78738
Phone: 512-371-6159 Fax: 512-351-8858
For terms and conditions of sales, please visit:
www.abracon.com

REVISION G : 10/15/2026

ABRACON IS ISO9001-2015 CERTIFIED

RJ45, Single Port, 10/100/1G/5G Base-T Magnetics Module



ARJM11 Series

Request Samples Check Inventory

21.30 x 15.90 x 13.60mm
RoHS/RoHS II Compliant
MSL Level = 1

LED SPECIFICATIONS FOR ALL SCHEMATICS
20mA Forward Current

Color	Green	Yellow	Orange
Wavelength	565nm Typ	585nm Typ	605nm Typ
Forward Voltage	2.2V Typ	2.1V Typ	2.1V Typ

Device Marking

Part number excluding packaging characters "-T"
xx-xxx-xx-xxx
e.g.
A1-009-AB-EW2

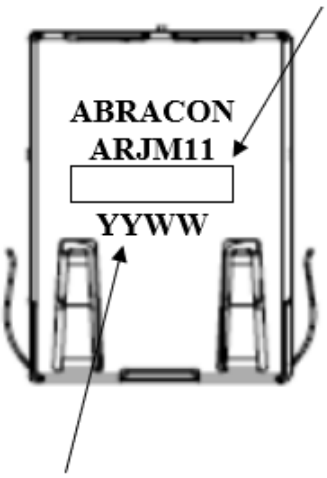

YY: Year: E.g. 21 for 2021

WW: Week: E.g. 05 for the 5th week of the year.

ABRACON

12117 Bee Caves Rd, Bldg-3, Suite 200
Bee Cave, TX 78738
Phone: 512-371-6159 Fax: 512-351-8858
For terms and conditions of sales, please visit:
www.abracon.com

ABRACON IS ISO9001-2015 CERTIFIED

RJ45, Single Port, 10/100/1G/5G Base-T Magnetics Module



ARJM11 Series

Request Samples Check Inventory

21.30 x 15.90 x 13.60mm
RoHS/RoHS II Compliant
MSL Level = 1

Soldering Profile

Wave Method

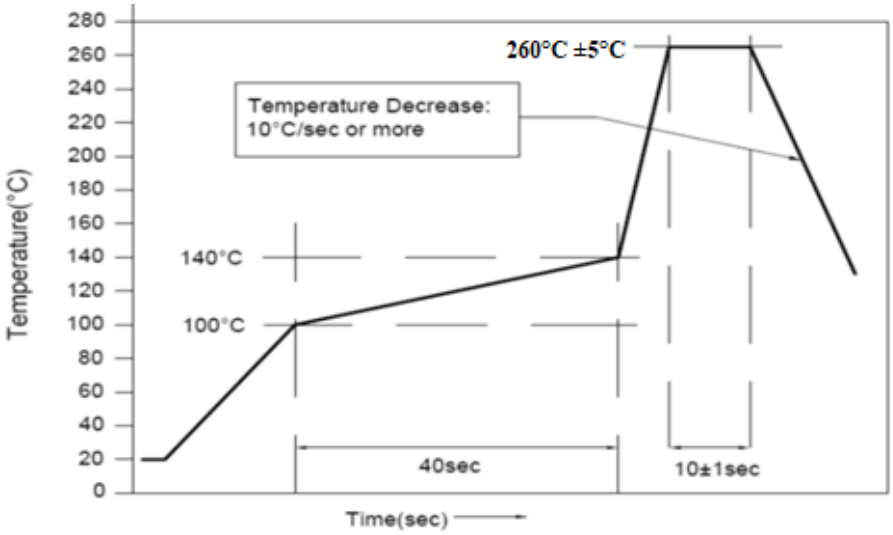

Reflow Method

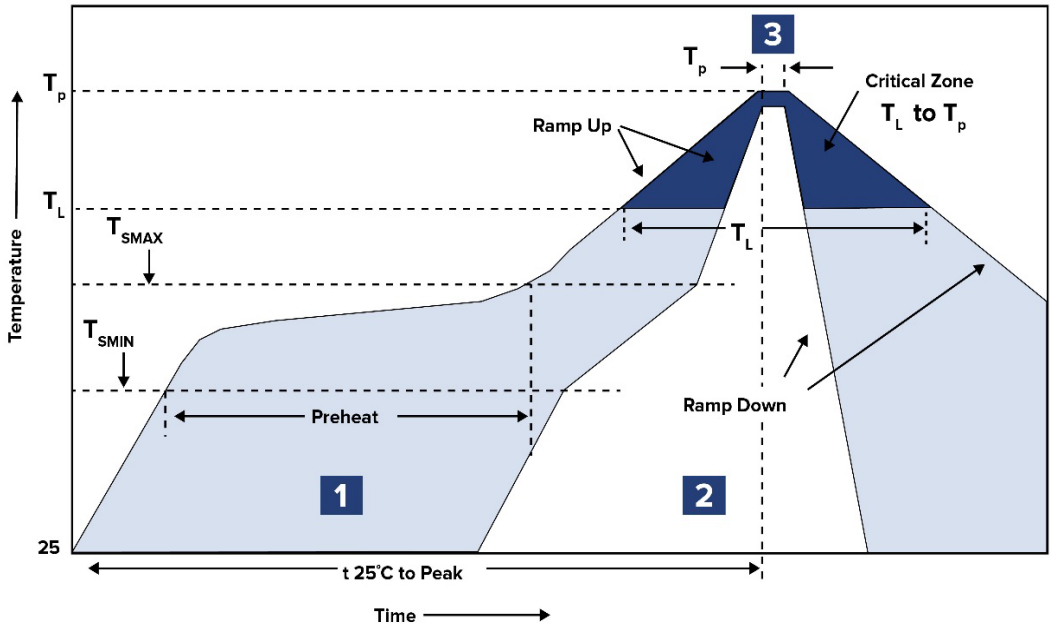

Zone	Description	Temperature	Times
1	Preheat	T_{SMIN} ~ T_{SMAX} = 150°C ~ 180°C	120 ~ 180 sec.
2	Reflow	T_L = 217°C	60 ~ 150 sec.
3	Peak heat	T_P = 260°C ±5°C	10 sec. MAX

ABRACON

12117 Bee Caves Rd, Bldg-3, Suite 200
Bee Cave, TX 78738
Phone: 512-371-6159 Fax: 512-351-8858
For terms and conditions of sales, please visit:
www.abracon.com

REVISION G : 10/15/2026

ABRACON IS
ISO9001-2015
CERTIFIED

RJ45, Single Port, 10/100/1G/5G Base-T Magnetics Module



ARJM11 Series

Request Samples Check Inventory

21.30 x 15.90 x 13.60mm
RoHS/RoHS II Compliant
MSL Level = 1

Packaging

Bulk/Tray (50pcs/tray)

Format A – 40 trays/carton, Weight: 5.7g/pc, Carton Gross Weight: 15.2Kg

Format B – 24 trays/carton, Weight: 5.7g/pc, Carton Gross Weight: 9.0Kg

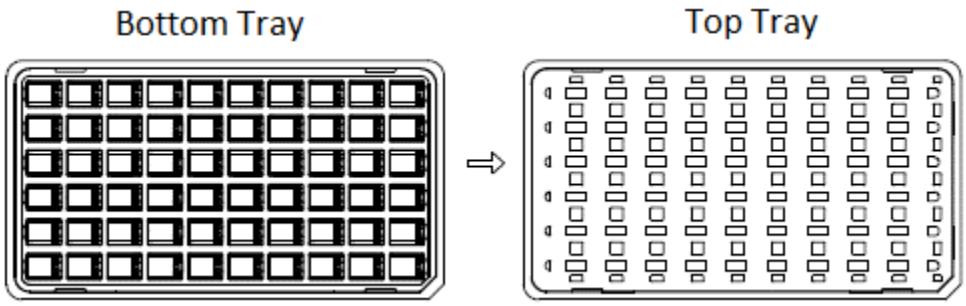

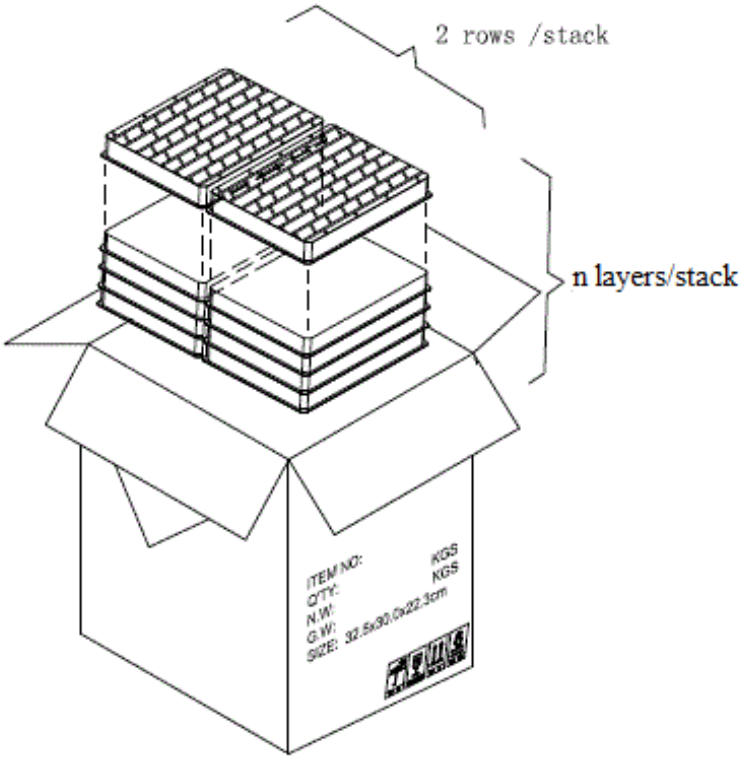

ABRACON

12117 Bee Caves Rd, Bldg-3, Suite 200
Bee Cave, TX 78738
Phone: 512-371-6159 Fax: 512-351-8858
For terms and conditions of sales, please visit:
www.abracon.com

REVISION G : 10/15/2026

ABRACON IS
ISO9001-2015
CERTIFIED

RJ45, Single Port, 10/100/1G/5G Base-T Magnetics Module



ARJM11 Series

Request Samples | Check Inventory

21.30 x 15.90 x 13.60mm
RoHS/RoHS II Compliant
MSL Level = 1

Tape & Reel (100pcs/reel)

Format C – 6 Reels/carton, Weight: 5.7g/pc, Carton Gross Weight: 7.0Kg

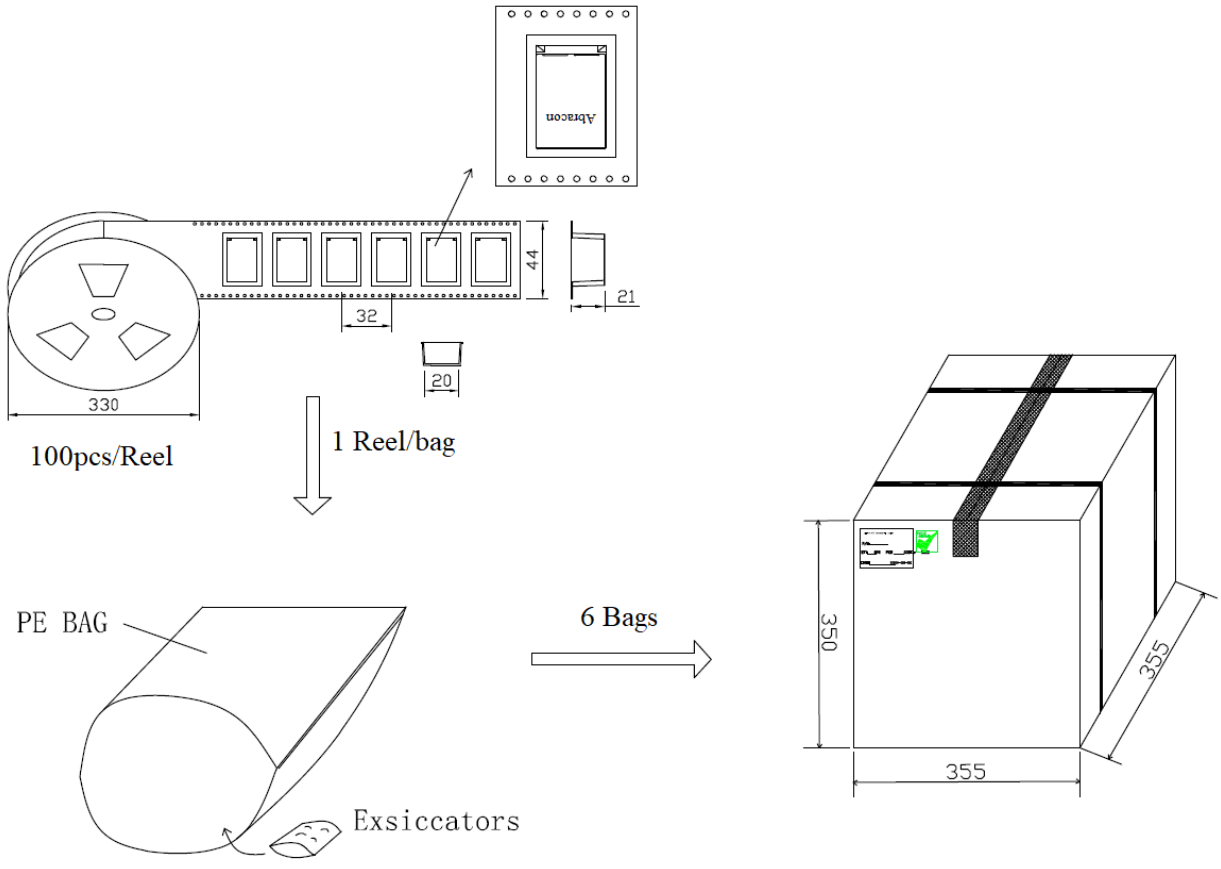

Dimensions: mm

ATTENTION: Abracon LLC's products are Commercial-Off-The-Shelf (COTS, which are designed, intended and validated for use in commercial, industrial and automotive applications. The customer is responsible for testing and verifying the performance of an Abracon solution to meet their system-level requirements.

ABRACON

12117 Bee Caves Rd, Bldg-3, Suite 200
Bee Cave, TX 78738
Phone: 512-371-6159 Fax: 512-351-8858
For terms and conditions of sales, please visit:
www.abracon.com

REVISION G : 10/15/2026

ABRACON IS
ISO9001-2015
CERTIFIED