BOURNS®

CM4030 SERIES
Common Mode Chokes

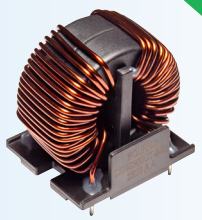

*RoHS COMPLIANT

Features
- AC EMI filtering common mode choke
- Inductance range: 2.90 to 8.90 mH
- Rated current: up to 25 Amps
- Operating temperature: -40 °C to +125 °C
- RoHS compliant*

Applications
- AC power supplies
- AC input filters
- DC power converters
- General EMI applications

Sustainability
- Eco-logistics-friendly packing
- Energy-saving low power design
- High efficiency, low power loss
- ISO 14001, low impact energy
- Responsibly sourced and produced
- Meets EU 94/62/EC standards

Product Overview

Bourns® CM4030 Series Common Mode Choke offers inductance ranges from 2.90 mH to 8.90 mH nominally and current ranges from 10 A to 25 A with a footprint measuring 41 mm long, 31 mm wide, and 40 mm tall.

The CM4030 Series is designed for filtering common mode noise in a wide range of industrial and commercial applications such as energy storage, enterprise computing, and green energy. A high permeability nanocrystalline core results in self resonant frequencies up to 3 MHz - ideal for filtering high frequency switching supplies with temperature ratings from -40 °C to +125 °C.

Please contact Bourns for customized solutions with extended sizes, inductance and current ranges.

Electrical Specifications (@ T_A = 25 °C Unless Otherwise Noted)

Bourns Part Number	Inductance @ 100K, 0.1 V (mH)	Tolerance (%)	Leakage Inductance @ 100K, 0.1 V Max. (µH)	DCR Max. (mΩ)	Irms Max. (A)	Hi-Pot 3.0K VAC, 2 s Max. (mA)
CM40300CT-892	8.90	-40 / +50	40	24.24	10	3.0
CM40301CT-522	5.20		24.75	10.8	15	
CM40302CT-452	4.50		23	8.62	20	
CM40303CT-292	2.90		16	5.2	25	

Environmental Specifications

Operating Temperature ..... -40 °C to +125 °C (Temperature Rise Included)
Storage Temperature ..... -25 °C to +85 °C
Moisture Sensitivity Level 1

Materials

Core ..... Nanocrystalline
Wire ..... Enameled copper
Terminal Finish ..... Sn
Glue ..... Epoxy

Electrical Schematic

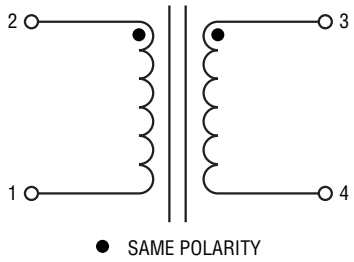

Contact Information

www.bourns.com	Phone	Email
Asia-Pacific	+886-2 2562-4117	asiacus@bourns.com
Europe	+36 88 885 877	eurocus@bourns.com
Mexico	+52 614 478 0400	mexicus@bourns.com
The Americas	+1-951 781-5500	americus@bourns.com

* RoHS Directive 2015/863, Mar 31, 2015 and Annex.
Specifications are subject to change without notice.
Users should verify actual device performance in their specific applications.

The products described herein and this document are subject to specific legal disclaimers as set forth on the last page of this document, and at www.bourns.com/docs/legal/disclaimer.pdf.

BOURNS®

CM4030 SERIES

Common Mode Chokes

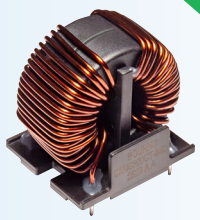

*RoHS COMPLIANT

Product Dimensions

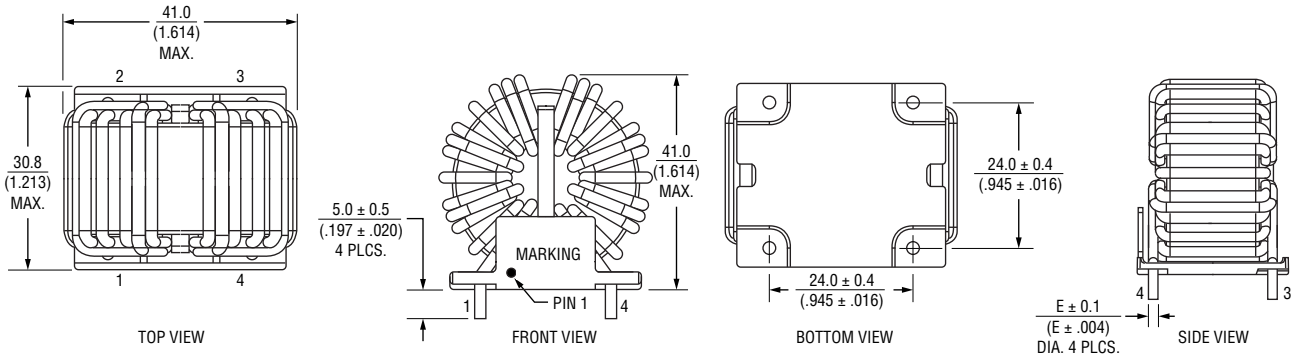

DIMENSIONS: MM / (INCHES)

Bourns Part Number	Dimension E
CM40300CT-892	1.15 (.045)
CM40301CT-522	1.55 (.061)

Bourns Part Number	Dimension E
CM40302CT-452	1.70 (.067)
CM40303CT-292	2.00 (.079)

Recommended Layout

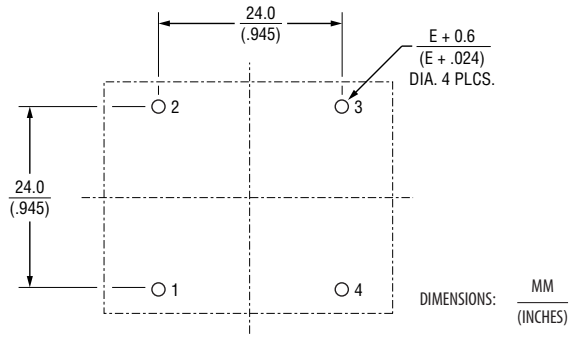

How to Order

CM 4030 0 C T - 892

Series
- CM = Common Mode

Core and Size
- 40 = Length; 30 = Width

Series Number
- 0
- 1
- 2
- 3

Reliability Level
- C = Consumer Grade

Pin Style
- T = Through-hole

Inductance Value (mH)
- 892 = 8.90
- 522 = 5.20
- 452 = 4.50
- 292 = 2.90

Specifications are subject to change without notice.
Users should verify actual device performance in their specific applications.

The products described herein and this document are subject to specific legal disclaimers as set forth on the last page of this document, and at www.bourns.com/docs/legal/disclaimer.pdf.

CM4030 SERIES
Common Mode Chokes

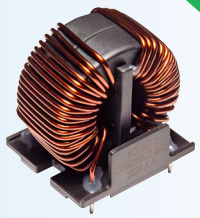

*RoHS COMPLIANT

Impedance

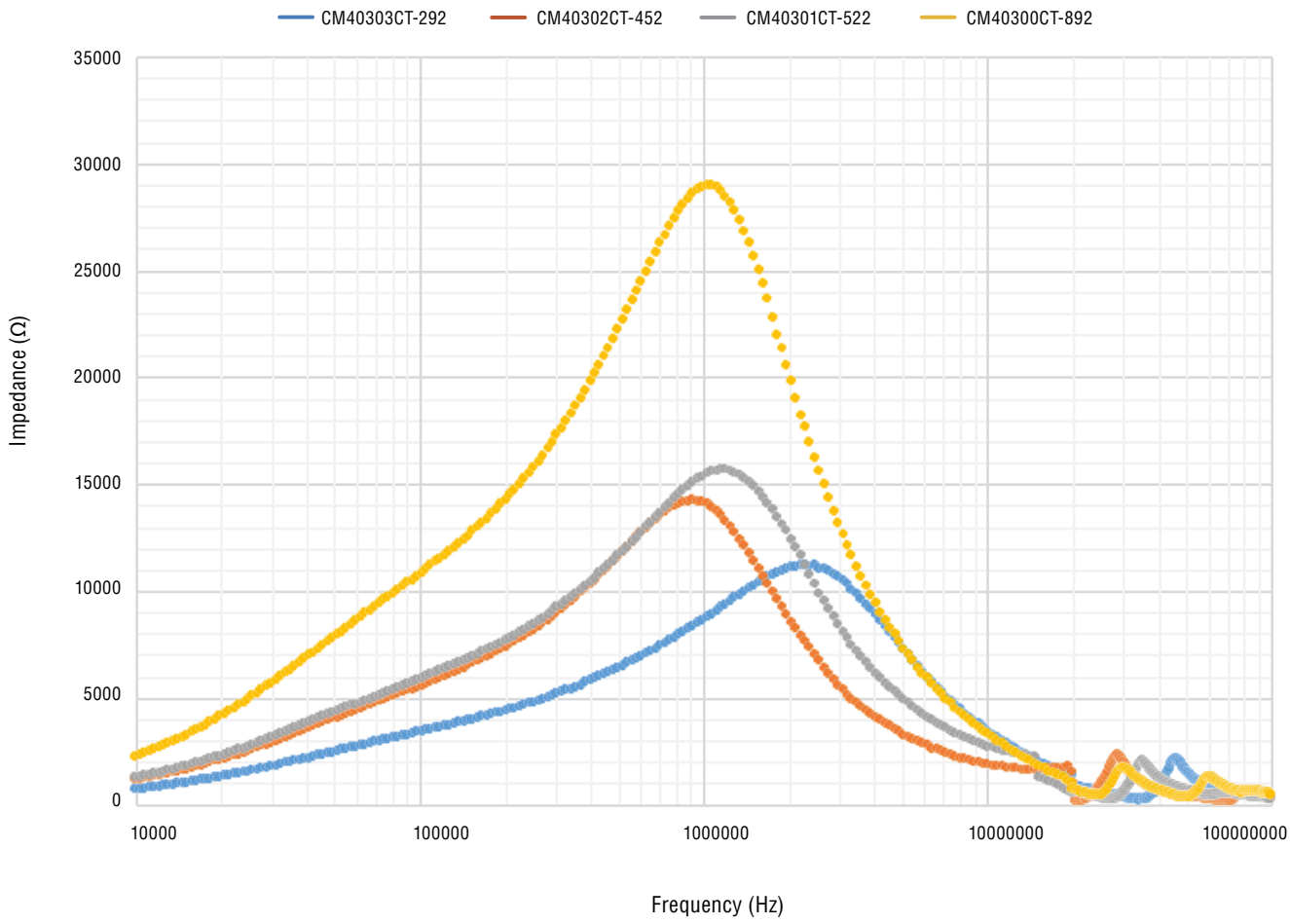

Specifications are subject to change without notice.
Users should verify actual device performance in their specific applications.

The products described herein and this document are subject to specific legal disclaimers as set forth on the last page of this document, and at www.bourns.com/docs/legal/disclaimer.pdf.

BOURNS®

CM4030 SERIES
Common Mode Chokes

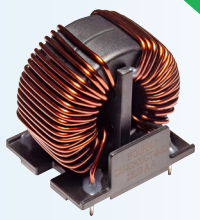

*RoHS COMPLIANT

Packaging Specifications

Box .....20 pcs. per box / 80 pcs. per carton

Typical Part Marking

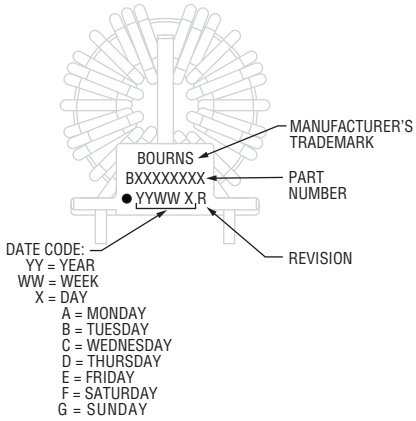

Packaging Specifications

1000 pieces per reel, 5 reels per carton.

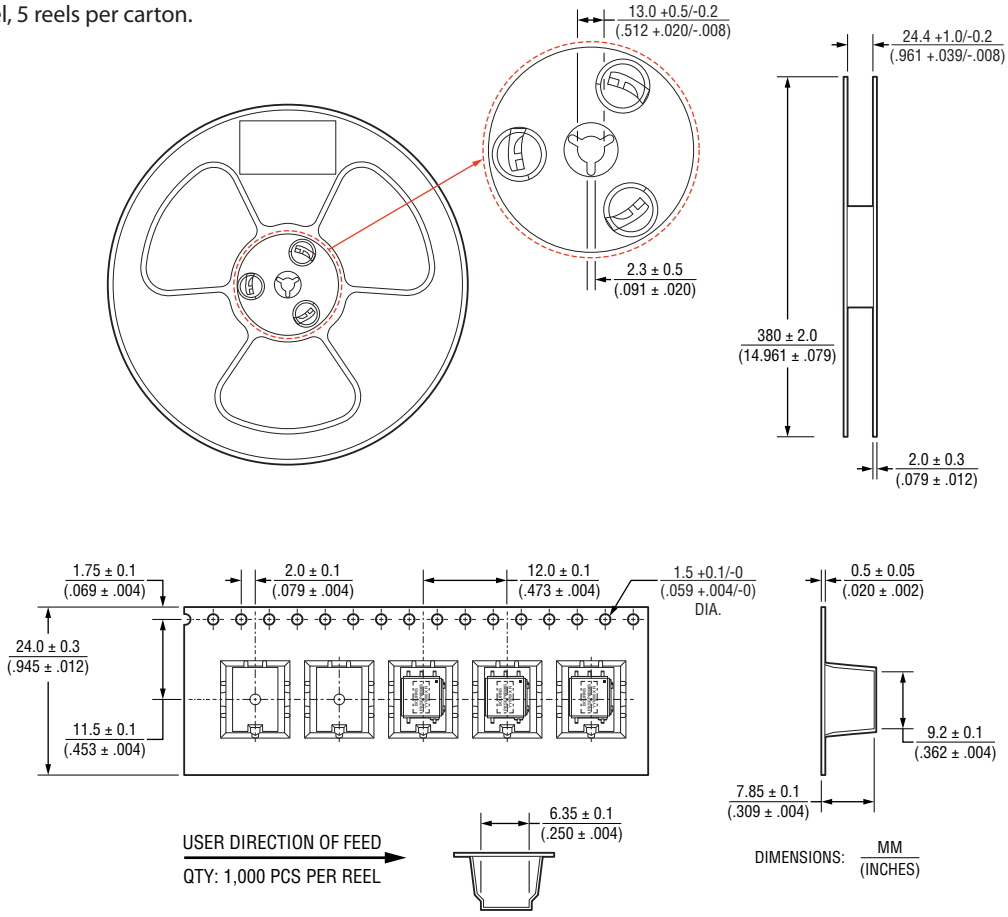

Specifications are subject to change without notice.
Users should verify actual device performance in their specific applications.

The products described herein and this document are subject to specific legal disclaimers as set forth on the last page of this document, and at www.bourns.com/docs/legal/disclaimer.pdf.

Legal Disclaimer Notice

This legal disclaimer applies to purchasers and users of Bourns® products manufactured by or on behalf of Bourns, Inc. and its affiliates (collectively, "Bourns").

Unless otherwise expressly indicated in writing, Bourns® products and data sheets relating thereto are subject to change without notice. Users should check for and obtain the latest relevant information and verify that such information is current and complete before placing orders for Bourns® products.

The characteristics and parameters of a Bourns® product set forth in its data sheet are based on laboratory conditions, and statements regarding the suitability of products for certain "typical" applications are based on Bourns' knowledge of typical requirements in generic applications. Bourns assumes that "typical" applications include failsafe/backup features to address critical risks to users and are designed to allow rework of Bourns® product to avoid scrap of a device solely due to malfunctioning Bourns® product. The characteristics and parameters of a Bourns® product in a user application may vary from the data sheet characteristics and parameters due to (i) the combination of the Bourns® product with other components in the user's application, or (ii) the environment of the user application itself. The characteristics and parameters of a Bourns® product also can and do vary in different applications and actual performance may vary over time. Thus, users should always verify the actual performance of the Bourns® product in their specific devices and applications and make their own independent judgments regarding the suitability of Bourns® product and the amount of additional test margin to design into their device or application to compensate for differences between laboratory and real-world conditions.

Unless Bourns has explicitly designated an individual Bourns® product as meeting the requirements of a particular industry standard (e.g., IATF 16949) or a particular qualification (e.g., UL listed or recognized), Bourns is not responsible for any failure of an individual Bourns® product to meet the requirements of such industry standard or particular qualification even if such industry standard or qualification is a "state of art". Users of Bourns® products are responsible for ensuring compliance with safety-related requirements and standards applicable to their devices or applications.

Bourns® products are not recommended, authorized or intended for use in applications where failure or malfunction may result in personal injury, death, or severe property or environmental damage, such as without limitation nuclear, life-critical medical and certain automotive and aviation applications. Except as set forth in the bullet points below or unless expressly and specifically approved in writing on a case-by-case basis by an authorized Bourns' representative, use of any Bourns® products in such unauthorized high-risk applications is at the user's sole risk.

- Bourns considers implantable/invasive devices and devices/procedures designed as life-supporting or life-sustaining by the U.S. Food and Drug Administration or equivalent organizations outside of the United States as "life-critical" medical applications. Bourns expressly identifies those Bourns® standard products that are suitable for use in typical medical applications that are not life-critical in its publication entitled "Bourns Medical Grade Component Guide."

- Bourns expressly identifies those Bourns® standard products that are suitable for use in typical automotive applications associated with any Automotive Safety Integrity Level (ASIL) in its publication entitled "Bourns Automotive Grade Component Guide." Bourns' designation of Bourns® product as compliant with the AEC-Q standard does not by itself mean that Bourns has approved such product for use in an automotive application.

- Bourns expressly identifies Bourns® standard products that are suitable for use in the typical aviation applications/systems requiring System Design Assurance Level (RTCA DO-254 DAL) of C, D or E in its publication entitled "Bourns Civilian Aerospace/Aviation Grade Component Guide." Bourns does not test its products for compliance with United States Federal Aviation Administration standards or any other generally equivalent governmental organization standard applicable to products designed or manufactured for use in aviation applications. Use of Bourns® standard components in aviation applications associated with RTCA DO-254 DAL A or B without proper approval noted above shall be at the user's sole risk.

- Bourns will review and authorize on a case-by-case basis the use of Bourns® standard products which are at least AEC-Q compliant in space-related civil applications (rockets, satellites) with a negotiated cross-waiver and indemnity agreement.

The use and level of testing applicable to Bourns® custom products shall be negotiated on a case-by-case basis by Bourns and the user for which such Bourns® custom products are specially designed. Absent a written agreement between Bourns and the user regarding the use and level of such testing, the above provisions applicable to Bourns® standard products shall also apply to such Bourns® custom products.

Use of Bourns® products or Bourns' technology in military/defense applications must be reviewed with Bourns for compliance with applicable export control laws and embargoes. Users shall not sell, transfer, export or re-export (which includes transfers within a country) any Bourns® products or technology or technical data for use in activities which involve the design, development, production, use or stockpiling of nuclear, chemical or biological weapons or missiles, nor shall they use Bourns® products or technology or technical data in any facility which engages in activities relating to such devices. Further, Bourns® products and Bourns' technology and technical data may not under any circumstance be exported or re-exported to countries subject to international sanctions or embargoes. Bourns® products and technology may not, without prior authorization from Bourns and/or the Government of a country where such product/technology is designed and/or manufactured, be resold, transferred, or re-exported (including within the same country) to any party not eligible to receive commodities, software, and technical data originating in such country.

To the maximum extent permitted by applicable law, Bourns disclaims (i) any and all liability for special, punitive, consequential, incidental or indirect damages or lost revenues or lost profits, and (ii) any and all implied warranties (those not based on parameters specified in Bourns' data sheets and/or specifications), including implied warranties of fitness for a particular purpose, non-infringement and merchantability.

For your convenience, copies of this Legal Disclaimer Notice with German, Spanish, Japanese, Traditional Chinese and Simplified Chinese bilingual versions are available at:
Web Page: https://www.bourns.com/legal/disclaimers-terms-and-policies
PDF: https://www.bourns.com/docs/Legal/disclaimer.pdf

K2540 08/26R

CALIFORNIA WARNING: Can expose you to lead, a carcinogen and reproductive toxicant.
See www.P65Warnings.ca.gov