Wire Wound Common Mode Choke for HDMI

ACM-21H

RoHS/RoHS II compliant



2.0 x 1.2 x 1.2mm

FEATURES:

- Small size and low profile
- Virtually no effect on high speed signals due to suppressed differential mode impedance
- Elimination of common mode noise in high speed, differential mode signal transmission lines such as HDMI

APPLICATIONS:

- HDMI, DVI, etc

STANDARD SPECIFICATIONS

Abracon P/N:	ACM-21H
Operating Temperature & Humidity:	-40˚C to +85˚C
Storage Temperature & Humidity:	-10˚C to +40˚C, Humidity < 70%RH (In tape and reel)

Part Number	Impedance @100MHz	DCR	I_R	Rated Voltage	Insulation Resistance
Units	Ω ± 25%	Ω (max.)	mA	Vdc	MΩ (min.)
ACM-21H-670	67	0.30	320	20	10
ACM-21H-900	90	0.40	280	20	10
ACM-21H-121	120	0.40	280	20	10

Test Conditions

Impedance (Common mode and differential mode): LCR Meter Agilent 4287A/E4991A
DCR: Agilent 4338B/34420
I_R: Electric power, Electrical current meter, Thermometer
Definition of Rated Current (I_R): The direct electric current as chip surface temperature rise just 20°C against chip initial surface temperature.
Insertion Loss: Network Analyzer Agilent E5071C
Insulation Resistance: High resistance meter Agilent 4339B

EOL

PART IDENTIFICATION:

ACM-21H- ☐ - ☐

Impedance Code	Packaging
Please refer to the table above	Blank: bulk T: Tape and Reel (2k pcs/reel)

30332 Esperanza, Rancho Santa Margarita, California 92688
tel 949-546-8000 | fax 949-546-8001 | www.abracon.com

Wire Wound Common Mode Choke for HDMI

ACM-21H

RoHS/RoHS II compliant



2.0 x 1.2 x 1.2mm

ELECTRICAL CHARACTERISTIC CURVE:

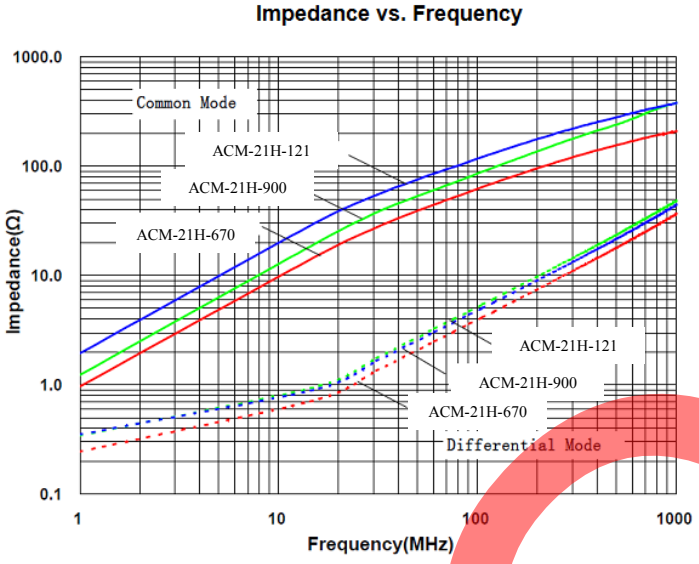

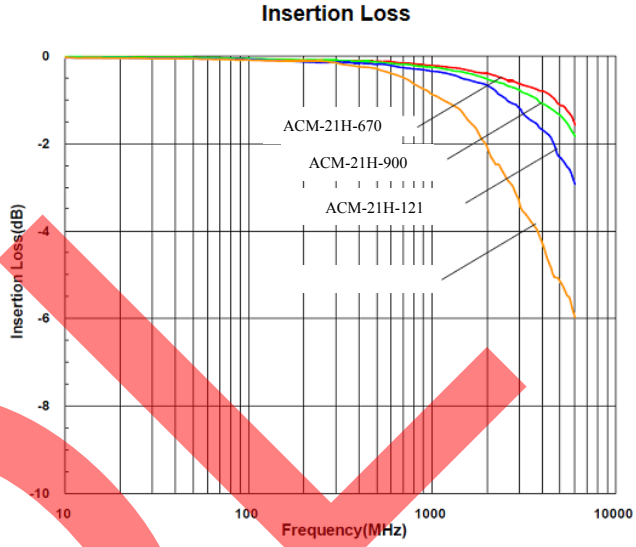

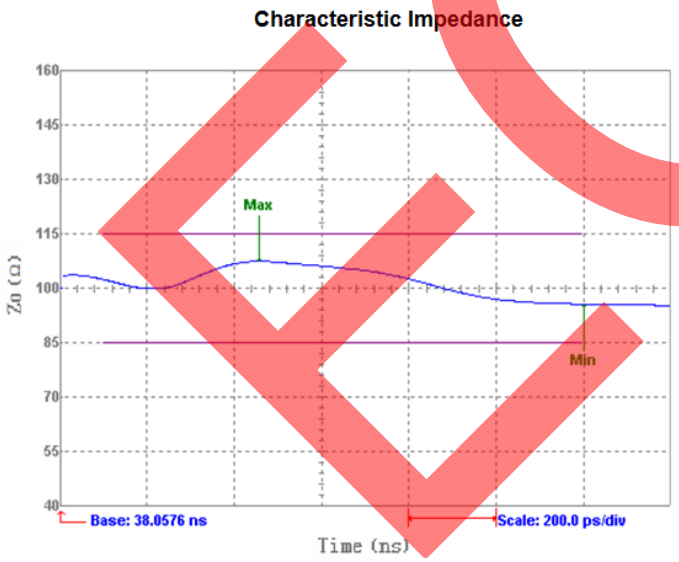

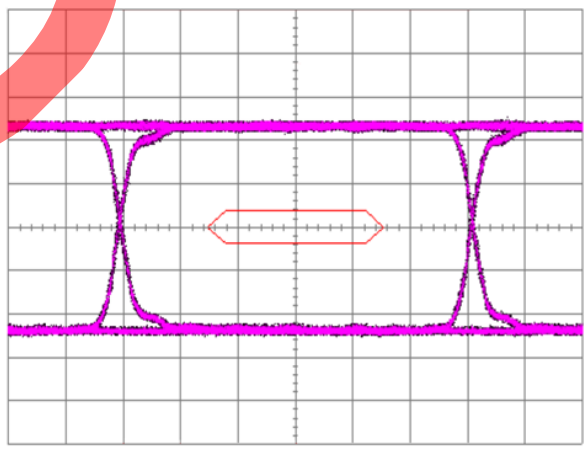

EOL

30332 Esperanza, Rancho Santa Margarita, California 92688
tel 949-546-8000 | fax 949-546-8001 | www.abracon.com

Wire Wound Common Mode Choke for HDMI

ACM-21H

RoHS/RoHS II compliant



2.0 x 1.2 x 1.2mm

OUTLINE DIMENSIONS:

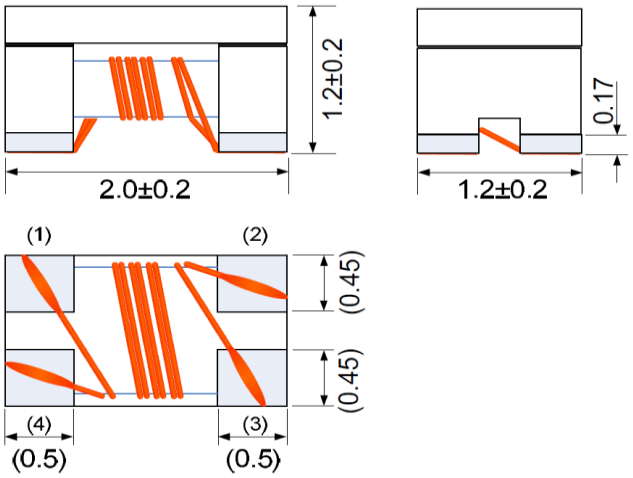

Recommended Land Pattern

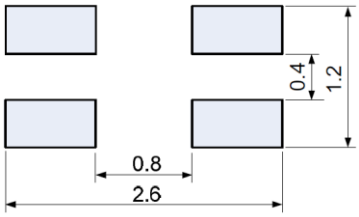

Schematic

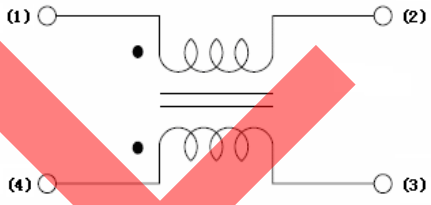

Materials

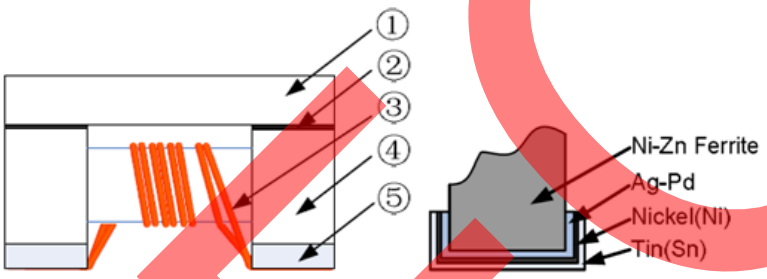

No.	Part Name	Material Name
①	Lid	Ni-Zn Ferrite
②	Epoxy	Epoxy resin
③	Wire	Polyurethane system enameled copper wire
④	Core	Ni-Zn Ferrite
⑤	Electrode structure	(Ag-Pd)+Ni+Sn plating

EOL

o

REFLOW PROFILE:

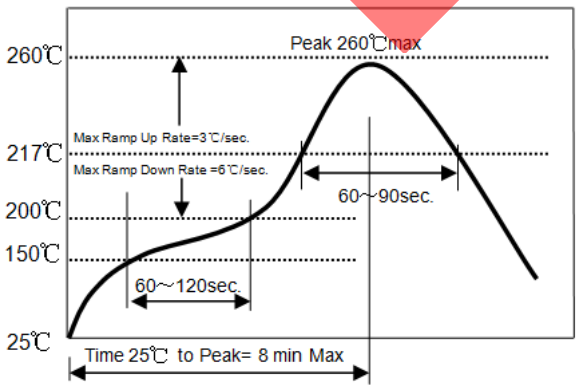

- Δ Preheat condition: 150~200 C/60~120sec.
- Δ Allowed time above 217C: 60~90sec.
- Δ Max temp: 260°C
- Δ Max time at max temp: 10sec.
- Δ Solder paste: Sn/3.0Ag/0.5Cu
- Δ Allowed Reflow time: 2 times max.

30332 Esperanza, Rancho Santa Margarita, California 92688
tel 949-546-8000| fax 949-546-8001 | www.abracon.com

Wire Wound Common Mode Choke for HDMI

ACM-21H

RoHS/RoHS II compliant



2.0 x 1.2 x 1.2mm

TAPE & REEL: 2000pcs/reel

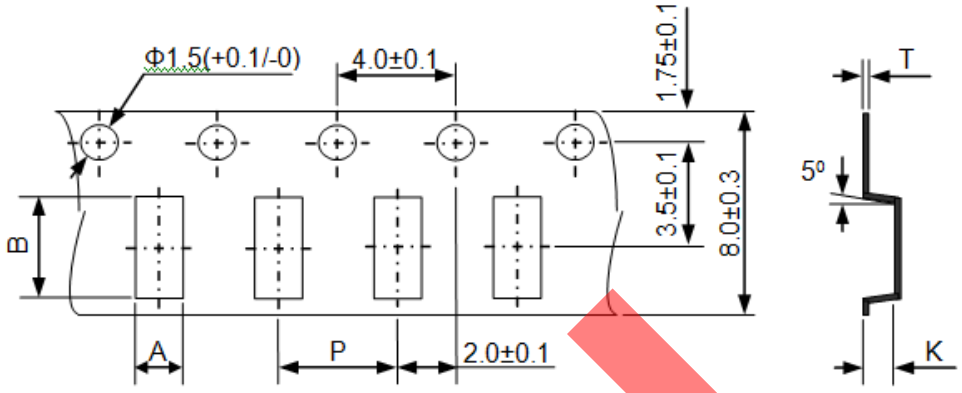

A	B	P	K	T
1.55±0.2	2.25±0.2	4.0±0.1	1.45±0.1	0.2±0.1

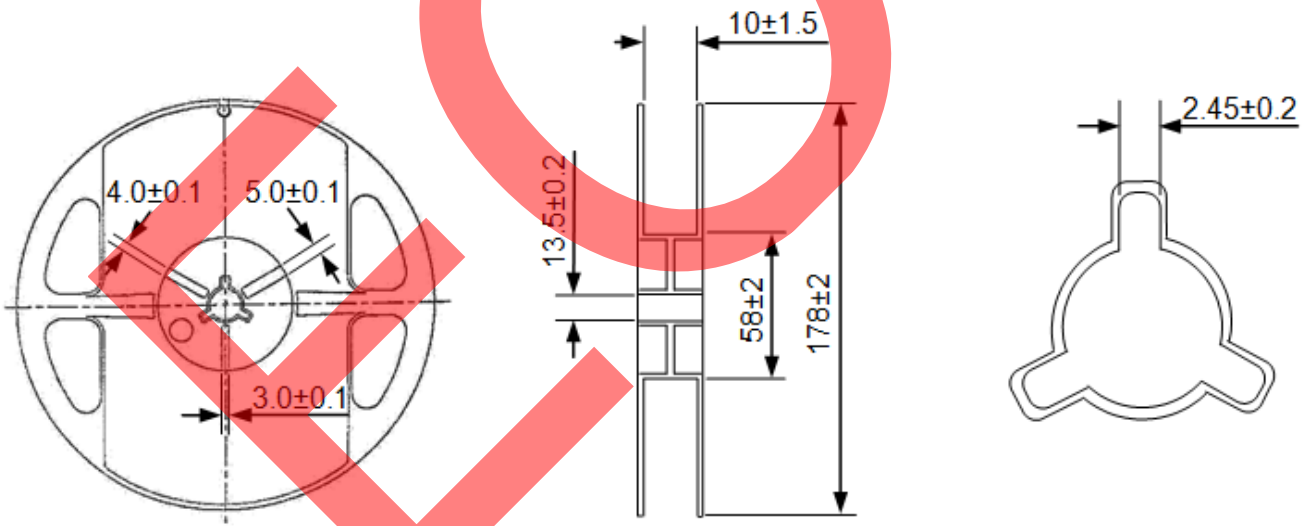

EOL

Dimension: mm

ATTENTION: Abracon Corporation's products are COTS – Commercial-Off-The-Shelf products; suitable for Commercial, Industrial and, where designated, Automotive Applications. Abracon's products are not specifically designed for Military, Aviation, Aerospace, Life-dependant Medical applications or any application requiring high reliability where component failure could result in loss of life and/or property. For applications requiring high reliability and/or presenting an extreme operating environment, written consent and authorization from Abracon Corporation is required. Please contact Abracon Corporation for more information.

30332 Esperanza, Rancho Santa Margarita, California 92688
tel 949-546-8000 | fax 949-546-8001 | www.abracon.com