SERIES PBH SWITCHES

PUSHBUTTON SWITCHES

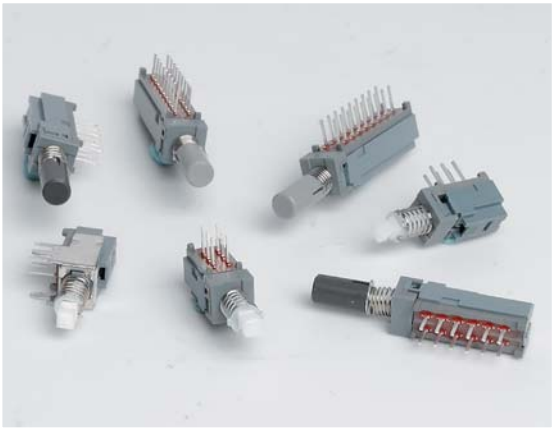

FEATURES & BENEFITS

- Up to 6 poles available
- Latching & momentary functions
- UL 94VO material option available

APPLICATIONS/MARKETS

- Telecommunications
- Networking
- Computers/servers
- Performance audio
- Instrumentation
- Low power on/off designs
- External hard drives and modems

SPECIFICATIONS

Contact Rating:	100mA @ 30 VDC
Life Expectancy (Mechanical):	30,000 cycles min.
Life Expectancy (Electrical):	10,000 cycles min.
Contact Resistance:	100mΩ max.
Insulation Resistance:	100MΩ min.
Dielectric Strength:	250 VAC for 60 seconds
Actuation Force:	2 Pole: 230 ± 50 g 4 Pole: 280 ± 50 g 6 Pole: 380 ± 50 g
Operating Temperature:	-20° to + 70°C

MATERIALS

Housing:	PBT (UL94-HB) Standard or (UL94-VO)
Actuator:	POM Standard or PA66 (UL94-VO)
Terminal Base:	PA66 (UL94-HB) Standard or (UL94-VO)
Moving Contacts:	Silver Copper alloy
Terminals:	Silver over Brass

HOW TO ORDER

SERIES	POLE	MECHANICAL CONFIGURATION	BRACKET/ TERMINATION	TIMING	CONTACT MATERIAL	HOUSING/ ACTUATOR MTL	CAP	CAP COLOR
PBH	2U = DPDT 4U = 4PDT 6U = 6PDT	EE = Latching OA = Momentary	(None) = Std. PC Pin SNP = Snap-In PC Pin KZX = Mounting Bracket	N = Non-shorting	AG = Silver	(None) = UL94-HB V = UL94-V0	X / (None) 1C 1D 1R 1S	(None) BLK WHT RED LGR DGR BLU

Example Ordering Number

PBH–6U–EE–SNP–N–AG–V–1R–LGR

Specifications subject to change without notice.



SERIES PBH SWITCHES

PUSHBUTTON SWITCHES

OPTIONS

2U



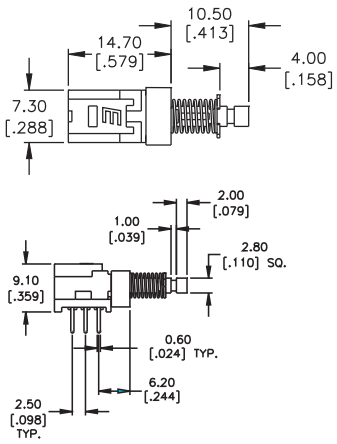

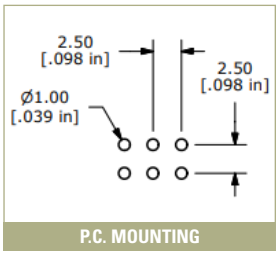

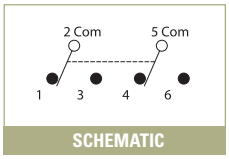

4U



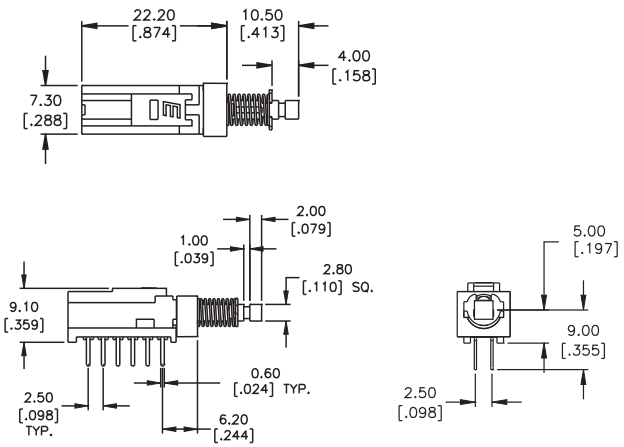

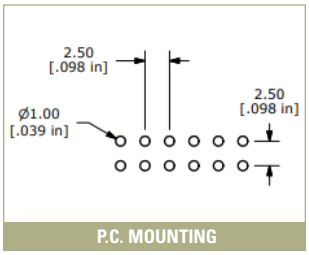

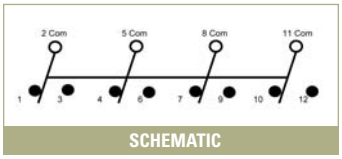

6U



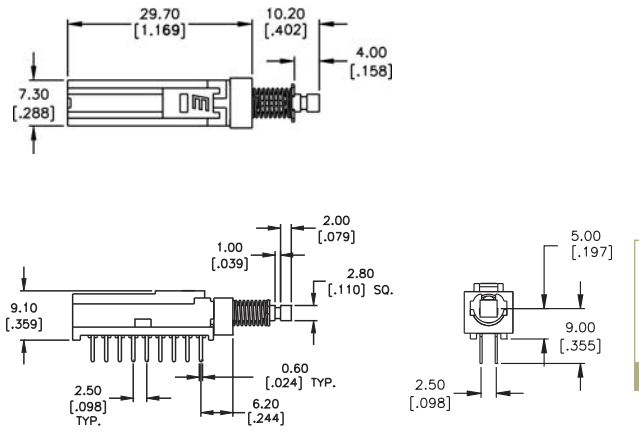

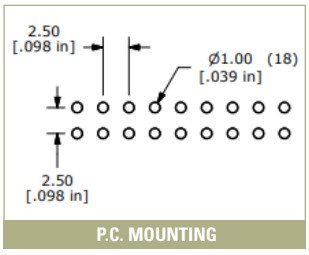

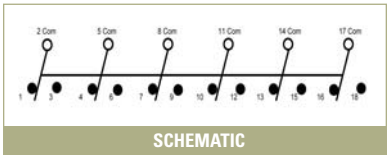

BRACKET/TERMINATION OPTIONS

SNP

SNAP-IN



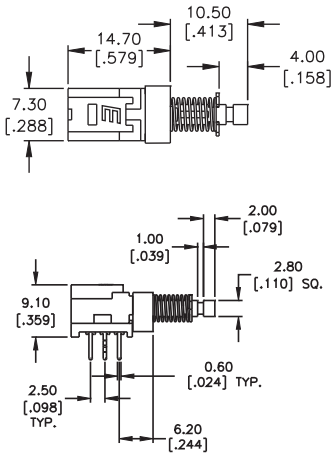

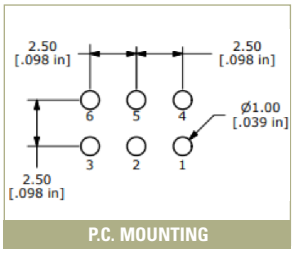

P.C. MOUNTING

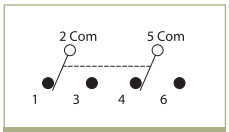

SCHEMATIC

KZX

MOUNTING BRACKET



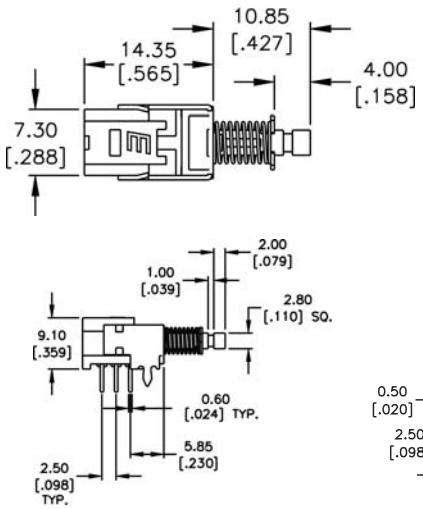

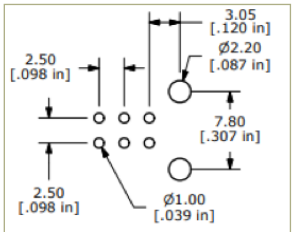

P.C. MOUNTING

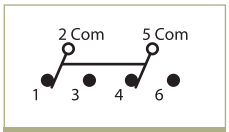

SCHEMATIC

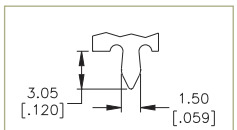

BRACKET LEG