A Product Line of
Diodes Incorporated

PI6C39X020401

Low Skew 1 to 4 Clock Buffer

Description

The PI6C39X020401 is a low skew, low additive jitter single input to four output clock buffer.

Block Diagram

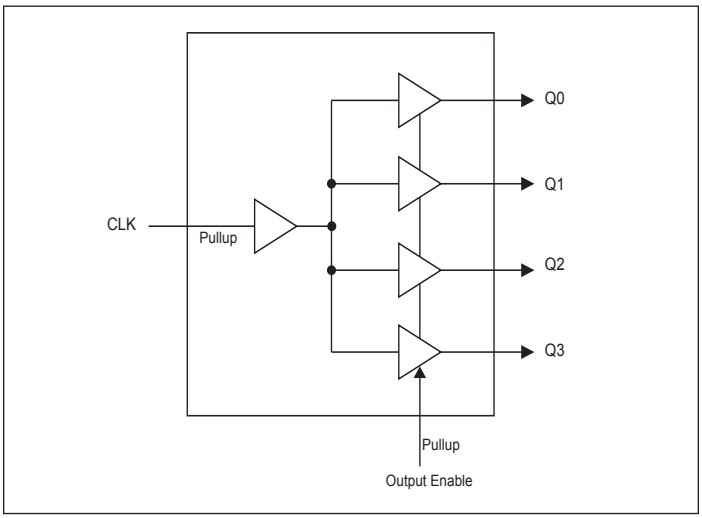

Features

- Low Skew Outputs (50ps)
- Low Additive Jitter RMS: 50fs
- Input/Output Frequency up to 250MHz
- Operating Voltages of 1.5V to 3.3V
- Output Enable Pin Tri-states Outputs
- 3.3V Tolerant Input Clock
- Extended Temperature Range: -40°C to 105°C
- Packaging (Pb-free & Green):
  - 8-pin, X1DFN (XEC)
- Totally Lead-Free & Fully RoHS Compliant (Notes 1 & 2)
- Halogen and Antimony Free. "Green" Device (Note 3)
- For automotive applications requiring specific change control (i.e. parts qualified to AEC-Q100/101/104/200, PPAP capable, and manufactured in IATF 16949 certified facilities), please contact us or your local Diodes representative.
  https://www.diodes.com/quality/product-definitions/

Notes:
1. No purposely added lead. Fully EU Directive 2002/95/EC (RoHS), 2011/65/EU (RoHS 2) & 2015/863/EU (RoHS 3) compliant.
2. See https://www.diodes.com/quality/lead-free/ for more information about Diodes Incorporated's definitions of Halogen- and Antimony-free, "Green" and Lead-free.
3. Halogen- and Antimony-free "Green" products are defined as those which contain <900ppm bromine, <900ppm chlorine (<1500ppm total Br + Cl) and <1000ppm antimony compounds.

© 2025 Copyright Diodes Incorporated. All Rights Reserved.

Pin Configuration

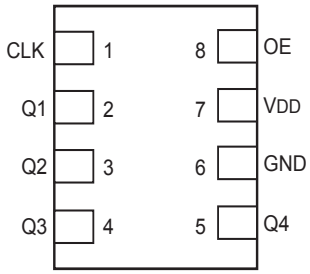

Pin Descriptions

Pin Number	Pin Name	Type	Description
1	CLK	Input	Clock Input. 3.3V tolerant input. Internal pull-up resistor.
2	Q1	Output	Clock Output 1.
3	Q2	Output	Clock Output 2.
4	Q3	Output	Clock Output 3.
5	Q4	Output	Clock Output 4.
6	GND	Power	Connect to ground.
7	VDD	Power	Connect to 1.5V, 1.8V, 2.5V or 3.3V.
8	OE	Input	Output Enable. Tri-states outputs when low. Internal pull-up resistor.

External Components

A minimum number of external components are required for proper operation. A decoupling capacitor of 0.01µF should be connected between VDD on pin 7 and GND on pin 6, as close to the device as possible. A 33Ω series terminating resistor may be used on each clock output if the trace is longer than 1 inch.

© 2025 Copyright Diodes Incorporated. All Rights Reserved.

Maximum Ratings

(Above which useful life may be impaired. For user guidelines, not tested.)

Storage Temperature . . . . . -65°C to +150°C
Junction Temperature . . . . . 125°C Max.
Supply Voltage, VDD. 4.6V
Output Enable and All Outputs . . . . . -0.5V to VDD+0.5V
CLK . . . . . -0.5V to 3.6V (VDD > 0V)
ESD Protection (HBM). 2000V

Note:

Stresses greater than those listed under MAXIMUM RATINGS may cause permanent damage to the device. This is a stress rating only and functional operation of the device at these or any other conditions above those indicated in the operational sections of this specification is not implied. Exposure to absolute maximum rating conditions for extended periods may affect reliability.

Recommended Operation Conditions

Parameter	Min.	Typ.	Max.	Units
Ambient Operating Temperature (Extended)	-40		+105	°C
Power Supply Voltage (measured in respect to GND)	+1.425		+3.465	V

DC Electrical Characteristics

VDD = 1.5V ±5%, Ambient Temperature -40°C to +105°C, unless stated otherwise.

Symbol	Parameter	Conditions	Min.	Typ.	Max.	Units
VDD	Operating Voltage		1.425	1.5	1.575	V
V_{IH}	Input High Voltage(1)	CLK, OE	0.7xVDD		3.465	V
V_{IL}	Input Low Voltage(1)	CLK, OE			0.3xVDD	V
I_{IH}	Input High Current	CLK, OE	-1		30	µA
I_{IL}	Input Low Current	CLK, OE	-40			µA
V_{OH}	Output High Voltage	I_{OH} = -6mA	0.95			V
V_{OL}	Output Low Voltage	I_{OL} = 6mA			0.45	V
IDD	Operating Supply Current	No load, 133MHz		10	18	mA
Z_O	Nominal Output Impedance			20		Ω
C_{IN}	Input Capacitance	CLK, OE pin		5		pF

Note:
1. Nominal switching threshold is VDD/2.

VDD = 1.8V ±5%, Ambient Temperature -40°C to +105°C, unless stated otherwise.

Symbol	Parameter	Conditions	Min.	Typ.	Max.	Units
VDD	Operating Voltage		1.7	1.8	1.89	V
V_{IH}	Input High Voltage(1)	CLK, OE	0.7xVDD		3.465	V
V_{IL}	Input Low Voltage(1)	CLK, OE			0.3xVDD	V
I_{IH}	Input High Current	CLK, OE	-1		30	µA
I_{IL}	Input Low Current	CLK, OE	-40			µA
V_{OH}	Output High Voltage	I_{OH} = -10mA	1.4			V
V_{OL}	Output Low Voltage	I_{OL} = 10mA			0.4	V

© 2025 Copyright Diodes Incorporated. All Rights Reserved.

Symbol	Parameter	Conditions	Min.	Typ.	Max.	Units
IDD	Operating Supply Current	No load, 133MHz		13	21	mA
Z_O	Nominal Output Impedance			20		Ω
C_{IN}	Input Capacitance	CLK, OE pin		5		pF

Note:
1. Nominal switching threshold is VDD/2.

VDD = 2.5V ±5%, Ambient Temperature -40°C to +105°C, unless stated otherwise.

Symbol	Parameter	Conditions	Min.	Typ.	Max.	Units
VDD	Operating Voltage		2.375	2.5	2.625	V
V_{IH}	Input High Voltage(1)	CLK, OE	0.7xVDD		3.465	V
V_{IL}	Input Low Voltage(1)	CLK, OE			0.3xVDD	V
I_{IH}	Input High Current	CLK, OE	-1		30	µA
I_{IL}	Input Low Current	CLK, OE	-60			µA
V_{OH}	Output High Voltage	I_{OH} = -16mA	1.8			V
V_{OL}	Output Low Voltage	I_{OL} = 16mA			0.4	V
IDD	Operating Supply Current	No load, 133MHz		18	26	mA
Z_O	Nominal Output Impedance			20		Ω
C_{IN}	Input Capacitance	CLK, OE pin		5		pF

Notes:
1. Nominal switching threshold is VDD/2.

VDD = 3.3V ±5%, Ambient Temperature -40°C to +105°C, unless stated otherwise.

Symbol	Parameter	Conditions	Min.	Typ.	Max.	Units
VDD	Operating Voltage		3.135	3.3	3.465	V
V_{IH}	Input High Voltage(1)	CLK, OE	0.7xVDD		3.465	V
V_{IL}	Input Low Voltage(1)	CLK, OE			0.3xVDD	V
I_{IH}	Input High Current	CLK, OE	-1		30	µA
I_{IL}	Input Low Current	CLK, OE	-70			µA
V_{OH}	Output High Voltage	I_{OH} = -25mA	2.2			V
V_{OL}	Output Low Voltage	I_{OL} = 25mA			0.7	V
IDD	Operating Supply Current	No load, 133MHz		22	35	mA
Z_O	Nominal Output Impedance			20		Ω
C_{IN}	Input Capacitance	CLK, OE pin		5		pF

Notes:
1. Nominal switching threshold is VDD/2.

© 2025 Copyright Diodes Incorporated. All Rights Reserved.

AC Electrical Characteristics

VDD = 1.5V ±5%, Ambient Temperature -40°C to +105°C, unless stated otherwise.

Symbol	Parameter	Conditions	Min.	Typ.	Max.	Units
F_{OUT}	Output Frequency		0		200	MHz
tOR	Output Rise Time	0.3V to 1.2V		1	1.6	ns
tOF	Output Fall Time	1.2V to 0.3V		1	1.6	ns
T_{PD}	Propagation Delay(1)		2	3	5	ns
T_{SK}	Output to Output Skew(2)	Rising edges at VDD/2		50	65	ps
$t_{START-UP}$	Start-up Time	Part start-up time for valid outputs after VDD ramp-up			2	ms
t_{EN}	Output Enable Time	C_L < 5pF			3	cycles
t_{DIS}	Output Disable Time	C_L < 5pF			3	cycles

Notes:
1. With rail to rail input clock
2. Between any 2 outputs with equal loading.

VDD = 1.8V ±5%, Ambient Temperature -40°C to +105°C, unless stated otherwise.

Symbol	Parameter	Conditions	Min.	Typ.	Max.	Units
F_{OUT}	Output Frequency		0		250	MHz
tOR	Output Rise Time	0.36V to 1.44V		0.6	1	ns
tOF	Output Fall Time	1.44V to 0.36V		0.6	1	ns
T_{PD}	Propagation Delay(1)		1.3	2	4	ns
T_{SK}	Output to Output Skew(2)	Rising edges at VDD/2		50	65	ps
J_{ADD}	Additive Jitter	@156.25MHz, 12k to 20MHz		0.03	0.05	ps
$t_{START-UP}$	Start-up Time	Part start-up time for valid outputs after VDD ramp-up			2	ms
t_{EN}	Output Enable Time	C_L < 5pF			3	cycles
t_{DIS}	Output Disable Time	C_L < 5pF			3	cycles

Notes:
1. With rail to rail input clock.
2. Between any 2 outputs with equal loading.

VDD = 2.5V ±5%, Ambient Temperature -40°C to +105°C, unless stated otherwise.

Symbol	Parameter	Conditions	Min.	Typ.	Max.	Units
F_{OUT}	Output Frequency		0		250	MHz
tOR	Output Rise Time	0.5V to 2V		0.6	1	ns
tOF	Output Fall Time	2V to 0.5V		0.6	1	ns
T_{PD}	Propagation Delay(1)		0.8	1.5	3	ns
T_{SK}	Output to Output Skew(1)	Rising edges at VDD/2		50	65	ps
J_{ADD}	Additive Jitter	@156.25MHz, 12k to 20MHz		0.035	0.05	ps
$t_{START-UP}$	Start-up Time	Part start-up time for valid outputs after VDD ramp-up			2	ms

© 2025 Copyright Diodes Incorporated. All Rights Reserved.

Symbol	Parameter	Conditions	Min.	Typ.	Max.	Units
t_{EN}	Output Enable Time	C_L < 5pF			3	cycles
t_{DIS}	Output Disable Time	C_L < 5pF			3	cycles

Notes:
1. With rail to rail input clock.
2. Between any 2 outputs with equal loading.

VDD = 3.3V ±10%, Ambient Temperature -40°C to +105°C, unless stated otherwise.

Symbol	Parameter	Conditions	Min.	Typ.	Max.	Units
F_{OUT}	Output Frequency		0		250	MHz
tOR	Output Rise Time	0.66V to 2.64V		0.6	1	ns
tOF	Output Fall Time	2.64V to 0.66V		0.6	1	ns
T_{PD}	Propagation Delay (1)		0.8	1.0	2.5	ns
T_{SK}	Output to Output Skew(2)	Rising edges at VDD/2		50	65	ps
J_{ADD}	Additive Jitter	@156.25MHz, 12k to 20MHz		0.037	0.05	ps
$t_{START-UP}$	Start-up Time	Part start-up time for valid outputs after VDD ramp-up			2	ms
t_{EN}	Output Enable Time	C_L < 5pF			3	cycles
t_{DIS}	Output Disable Time	C_L < 5pF			3	cycles

Notes:
1. With rail to rail input clock.
2. Between any 2 outputs with equal loading.

Thermal Characteristics

Symbol	Parameter	Conditions	Min.	Typ.	Max.	Units
θJA	Thermal Resistance Junction to Ambient	Still air		157		°C/W
θJC	Thermal Resistance Junction to Case			42		°C/W

© 2025 Copyright Diodes Incorporated. All Rights Reserved.

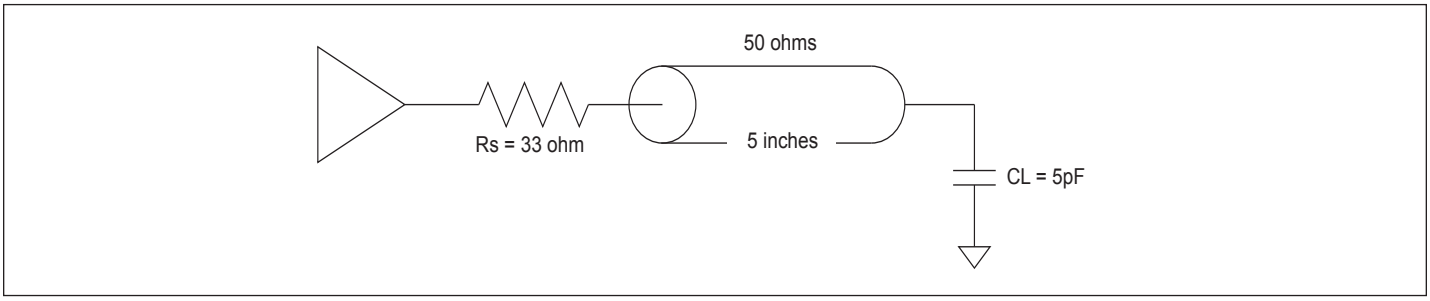

Figure 1. Test Circuit

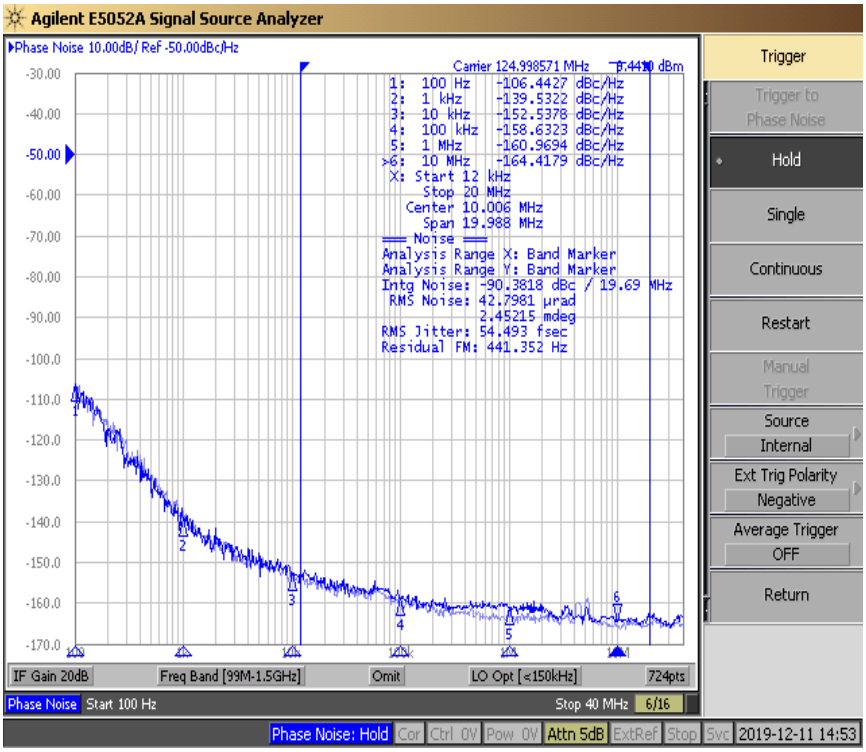

Figure 2. Additive Phase Noise Plot

© 2025 Copyright Diodes Incorporated. All Rights Reserved.

Application Information

Suggest for Unused Inputs and Outputs

LVCMOS Input Control Pins

It is suggested to add pull-up = 4.7k and pull-down = 1k for LVCMOS pins even though they have internal pull-up/down but with much higher value (≥50k) for higher design reliability.

Outputs

All unused outputs are suggested to be left open and not connected to any trace. This can lower the IC power consumption.

Power Decoupling & Routing

VDD Pin Decoupling

Each VDD pin must have a 0.1uF decoupling capacitor. For better decoupling, 1uF can be used. Locating the decoupling capacitor on the component side has better decoupling filter result as shown.

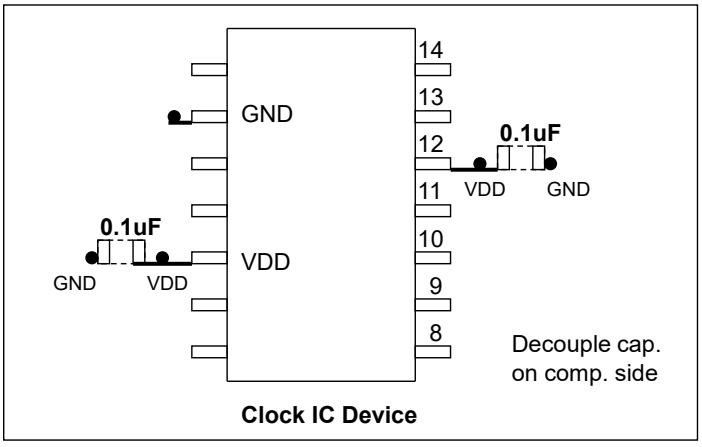

Placement of Decoupling Caps

CMOS Clock Trace Routing

Please ensure that there is a sufficient keep-out area to the adjacent trace (>20mil.). In an example using a 125MHz XO driving a buffer IC, it is better to route the clock trace on the component side with a 33Ω termination resistor.

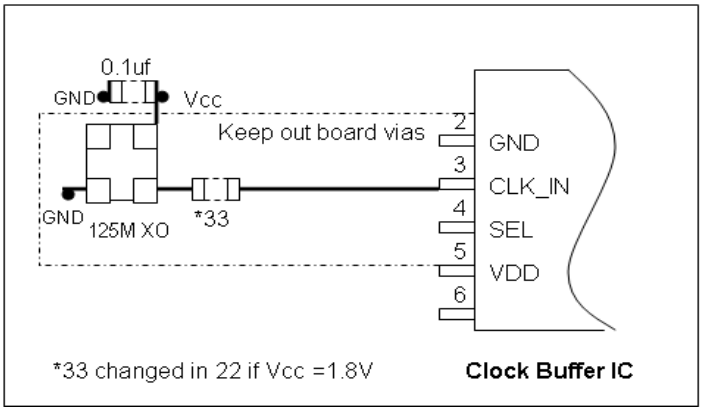

© 2025 Copyright Diodes Incorporated. All Rights Reserved.

CMOS Output Termination

Popular CMOS Output Termination

The most popular CMOS termination is a serial resistor close to the output pin (≤200mil). It is simple and balances the drive strength. The resistor's value can be fine tuned for best performance during board bring-up based on VDDO voltage used.

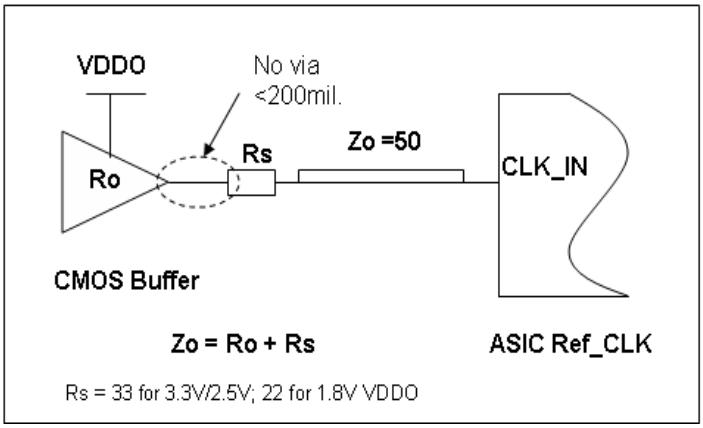

Combining Serial and Parallel Termination

Designers can also use a parallel termination for CMOS outputs. For example, a 50Ω pull-down resistor can be used at the Rx side to reduce signal reflection, but it reduces the signals V_swing in half. This pull-down can be combined with a serial resistor to form a smaller clock voltage difference. The following diagram shows how to transition a 2.5V clock into 1.8V clock.

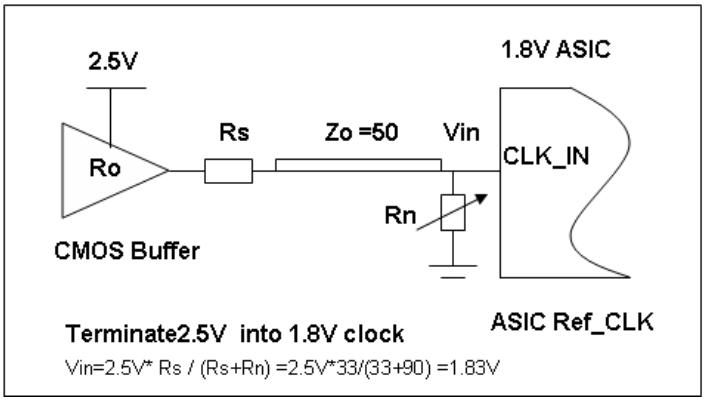

Rs = 33Ω with Rn = 100Ω, to transition 3.3V CMOS to 2.5V

Rs = 43Ω with Rn =70Ω to transition 3.3V CMOS to 1.8V

© 2025 Copyright Diodes Incorporated. All Rights Reserved.

Clock Jitter Definitions

Total Jitter = RJ + DJ

Random Jitter (RJ) is unpredictable and unbounded timing noise that can fit in a Gaussian math distribution in RMS. RJ test values are directly related with how long or how many test samples are available. Deterministic Jitter (DJ) is timing jitter that is predictable and periodic in fixed interference frequency. Total Jitter (TJ) is the combination of random jitter and deterministic jitter, where is a factor based on total test sample count. JEDEC std. specifies digital clock TJ in 10k random samples.

Phase Jitter

Phase noise is short-term random noise attached on the clock carrier and it is a function of the clock offset from the carrier, for example dBc/Hz@10kHz which is phase noise power in 1-Hz normalized bandwidth vs. the carrier power @10kHz offset. Integration of phase noise in plot over a given frequency band yields RMS phase jitter, for example, to specify phase jitter ≤1ps at 12k to 20MHz offset band as SONET standard specification.

Device Thermal Calculation

The JEDEC thermal model in a 4-layer PCB is shown below.

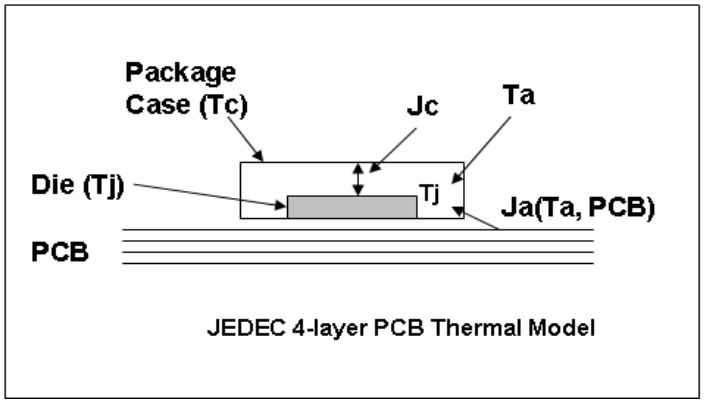

JEDEC IC Thermal Model

Important factors to influence device operating temperature are:

1) The power dissipation from the chip (P_chip) is after subtracting power dissipation from external loads. Generally it can be the no-load device IDD

2) Package type and PCB stack-up structure, for example, 1oz 4 layer board. PCB with more layers and are thicker has better heat dissipation

3) Chassis air flow and cooling mechanism. More air flow M/s and adding heat sink on device can reduce device final die junction temperature Tj

The individual device thermal calculation formula:

Tj = Ta + Pchip x Ja

Tc = Tj - Pchip x Jc

Ja ___ Package thermal resistance from die to the ambient air in C/W unit; This data is provided in JEDEC model simulation. An air flow of 1m/s will reduce Ja (still air) by 20~30%

Jc ___ Package thermal resistance from die to the package case in C/W unit

Tj ___ Die junction temperature in C (industry limit <125C max.)

Ta ___ Ambient air temperature in C

Tc ___ Package case temperature in C

Pchip___ IC actually consumes power through Iee/GND current

© 2025 Copyright Diodes Incorporated. All Rights Reserved.

Part Marking



FZ: PI6C39X020401XECIE
Y: Year
W: Workweek
Line above first character denotes Lead-free and Green

© 2025 Copyright Diodes Incorporated. All Rights Reserved.

Packaging Mechanical

8-X1DFN (XEC)

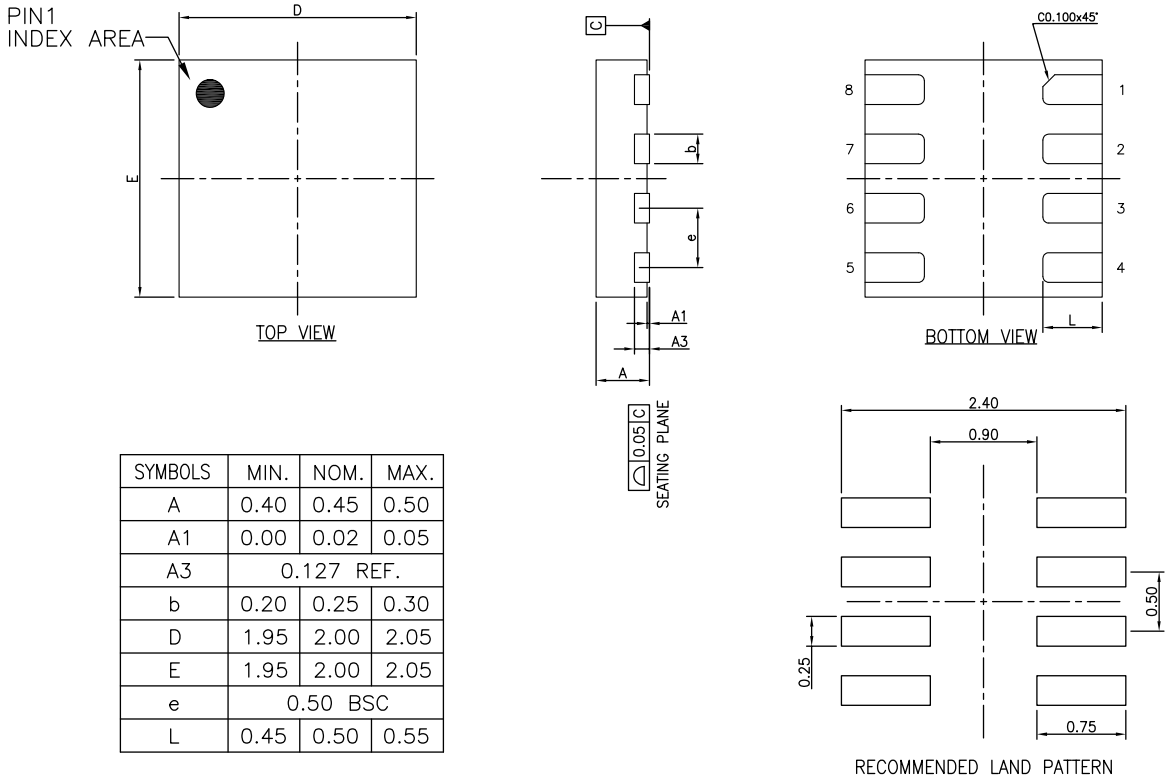

SYMBOLS	MIN.	NOM.	MAX.
A	0.40	0.45	0.50
A1	0.00	0.02	0.05
A3	0.127 REF.		
b	0.20	0.25	0.30
D	1.95	2.00	2.05
E	1.95	2.00	2.05
e	0.50 BSC		
L	0.45	0.50	0.55

NOTE :
1. ALL DIMENSIONS ARE IN mm. ANGLES IN DEGREES.
2. Ref JEDEC MO-287
3. RECOMMENDED LAND PATTERN IS FOR REFERENCE ONLY.

DIODES INCORPORATED | PERICOM A PRODUCT LINE OF DIODES INCORPORATED — ENABLING SERIAL CONNECTIVITY

DATE: 09/10/19

DESCRIPTION: 8-Contact, Extra Thin Dual Flat No-Lead (X1DFN)

PACKAGE CODE: XEC (XEC8)

DOCUMENT CONTROL #: PD-2242 **REVISION: --**

For latest package info.
please check: http://www.diodes.com/design/support/packaging/pericom-packaging/packaging-mechanicals-and-thermal-characteristics/

Mechanical Data

- Moisture Sensitivity: Level 1 per J-STD-020
- Terminals: Finish - Matte Tin (Sn) Plated Leads. Solderable per MIL-STD-202, Method 208 e3
- Weight: 0.0055 grams (Approximate)

© 2025 Copyright Diodes Incorporated. All Rights Reserved.

Ordering Information

Orderable Part Number	Package Code	Package Description
PI6C39X020401XECIEX	XEC	8-contact, Extra Thin Dual Flat No-Lead (X1DFN)

Notes:

1. No purposely added lead. Fully EU Directive 2002/95/EC (RoHS), 2011/65/EU (RoHS 2) & 2015/863/EU (RoHS 3) compliant.
2. See https://www.diodes.com/quality/lead-free/ for more information about Diodes Incorporated's definitions of Halogen- and Antimony-free, "Green" and Lead-free.
3. Halogen- and Antimony-free "Green" products are defined as those which contain <900ppm bromine, <900ppm chlorine (<1500ppm total Br + Cl) and <1000ppm antimony compounds.
4. I = Industrial
5. E = Pb-free and Green
6. X suffix = Tape/Reel

© 2025 Copyright Diodes Incorporated. All Rights Reserved.

IMPORTANT NOTICE

1. DIODES INCORPORATED (Diodes) AND ITS SUBSIDIARIES MAKE NO WARRANTY OF ANY KIND, EXPRESS OR IMPLIED, WITH REGARDS TO ANY INFORMATION CONTAINED IN THIS DOCUMENT, INCLUDING, BUT NOT LIMITED TO, THE IMPLIED WARRANTIES OF MERCHANTABILITY, FITNESS FOR A PARTICULAR PURPOSE OR NON-INFRINGEMENT OF THIRD PARTY INTELLECTUAL PROPERTY RIGHTS (AND THEIR EQUIVALENTS UNDER THE LAWS OF ANY JURISDICTION).

2. The Information contained herein is for informational purpose only and is provided only to illustrate the operation of Diodes' products described herein and application examples. Diodes does not assume any liability arising out of the application or use of this document or any product described herein. This document is intended for skilled and technically trained engineering customers and users who design with Diodes' products. Diodes' products may be used to facilitate safety-related applications; however, in all instances customers and users are responsible for (a) selecting the appropriate Diodes products for their applications, (b) evaluating the suitability of Diodes' products for their intended applications, (c) ensuring their applications, which incorporate Diodes' products, comply the applicable legal and regulatory requirements as well as safety and functional-safety related standards, and (d) ensuring they design with appropriate safeguards (including testing, validation, quality control techniques, redundancy, malfunction prevention, and appropriate treatment for aging degradation) to minimize the risks associated with their applications.

3. Diodes assumes no liability for any application-related information, support, assistance or feedback that may be provided by Diodes from time to time. Any customer or user of this document or products described herein will assume all risks and liabilities associated with such use, and will hold Diodes and all companies whose products are represented herein or on Diodes' websites, harmless against all damages and liabilities.

4. Products described herein may be covered by one or more United States, international or foreign patents and pending patent applications. Product names and markings noted herein may also be covered by one or more United States, international or foreign trademarks and trademark applications. Diodes does not convey any license under any of its intellectual property rights or the rights of any third parties (including third parties whose products and services may be described in this document or on Diodes' website) under this document.

5. Diodes' products are provided subject to Diodes' Standard Terms and Conditions of Sale (https://www.diodes.com/about/company/terms-and-conditions/terms-and-conditions-of-sales/) or other applicable terms. This document does not alter or expand the applicable warranties provided by Diodes. Diodes does not warrant or accept any liability whatsoever in respect of any products purchased through unauthorized sales channel.

6. Diodes' products and technology may not be used for or incorporated into any products or systems whose manufacture, use or sale is prohibited under any applicable laws and regulations. Should customers or users use Diodes' products in contravention of any applicable laws or regulations, or for any unintended or unauthorized application, customers and users will (a) be solely responsible for any damages, losses or penalties arising in connection therewith or as a result thereof, and (b) indemnify and hold Diodes and its representatives and agents harmless against any and all claims, damages, expenses, and attorney fees arising out of, directly or indirectly, any claim relating to any noncompliance with the applicable laws and regulations, as well as any unintended or unauthorized application.

7. While efforts have been made to ensure the information contained in this document is accurate, complete and current, it may contain technical inaccuracies, omissions and typographical errors. Diodes does not warrant that information contained in this document is error-free and Diodes is under no obligation to update or otherwise correct this information. Notwithstanding the foregoing, Diodes reserves the right to make modifications, enhancements, improvements, corrections or other changes without further notice to this document and any product described herein. This document is written in English but may be translated into multiple languages for reference. Only the English version of this document is the final and determinative format released by Diodes.

8. Any unauthorized copying, modification, distribution, transmission, display or other use of this document (or any portion hereof) is prohibited. Diodes assumes no responsibility for any losses incurred by the customers or users or any third parties arising from any such unauthorized use.

9. This Notice may be periodically updated with the most recent version available at https://www.diodes.com/about/company/terms-and-conditions/important-notice

The Diodes logo is a registered trademark of Diodes Incorporated in the United States and other countries.
All other trademarks are the property of their respective owners.
© 2025 Diodes Incorporated. All Rights Reserved.

www.diodes.com

© 2025 Copyright Diodes Incorporated. All Rights Reserved.