DS240S-320



- MOV Technology
- UL1449 Type 4CA
- 40kA Surge Current Rating
- Visual fault indicator and remote contacts
- 10-Year warranty

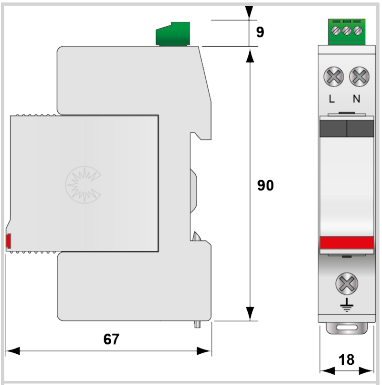

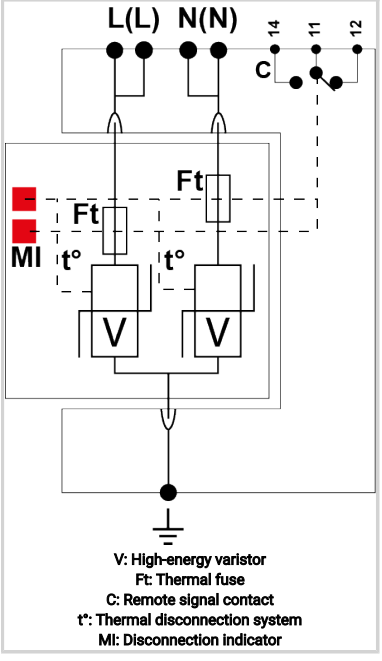

V: High-energy varistor
Ft: Thermal fuse
C: Remote signal contact
t°: Thermal disconnection system
MI: Disconnection indicator

Electrical Characteristics		
Network		230/400V
Nominal line voltage	Un	230 Vac
Max. AC operating voltage	Uc	320 Vac
Max. load current *if series connection*	IL	20 A
Max. discharge current *max. withstand @ 8/20 µs by pole*	Imax	40 kA
Total Maximum discharge current *max. total withstand @ 8/20 µs*	Imax Total	80 kA
Connection mode(s)		L/PE and N/PE
Protection mode(s)		Common mode
Residual voltage at 5 kA *@ 5 kA (8/20µs)*	Up-5kA	1 kV
POWER SPD TYPE		UL1449 5th Ed. TYPE 4CA
AC/DC/DC PV/RF		AC
PHASE	(PH)	1S
AMPS	(A)	N/A
AMBIENT MIN	(C)	-40
AMBIENT MAX	(C)	+85
MODES		L-L, L-G, L-N, N-G
IN *15 impulses 8/20µs*	(kA)	20
SCCR	(kA)	n/a
IMAX *8/20µs*	(kA)	40
Mechanical Characteristics		
Technology		MOV
Connection to Network		By screw terminals: 1.5-10mm² (L/N) or 2.5-25mm² (PE)
Format		Plug-in modular box
Mounting		Symmetrical rail 35 mm (EN 60715)
Operating temperature	Tu	-40/+85°C
Protection rating		IP20
Failsafe mode		Disconnection from AC network
CONNECTION METHOD		Screw Terminal, 15-5AWG Solid Wire, 15-7AWG Stranded Wire
MOUNTING		Din Rail
MATERIAL		Thermoplastic UL94-V0
NEMA RATING (IP RATING)		NEMA 2 (IP20)
FAIL-SAFE BEHAVIOR		Disconnection via fuse-link
REAL-TIME DIAGNOSTICS		Visual indicator and remote contacts
DIMENSIONS		See diagram
WEIGHT		0.30 lbs
Standards		
Certification		UL Recognized
Environmental standards		EU RoHS

DS240S-320

UL STANDARD		UL1449 5th Edition
UL CATEGORY		VZCA2, VZCA8
UL FILE NUMBER		E326289
STANDARDS		NOM-003-SCFI-2014, NOM-001-SCFI-1993
Part number		
311911		