REVISIONS				
SYM	ZONE	ECN, ERN NO.	DATE	APPRD.
A		PROPOSAL	NOV 13/08	L.CHAN
B		FIX THE PACKING QUANTITY	MAR 13/13	L.CHAN

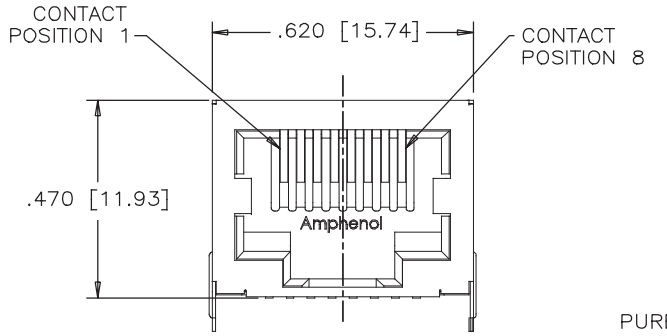

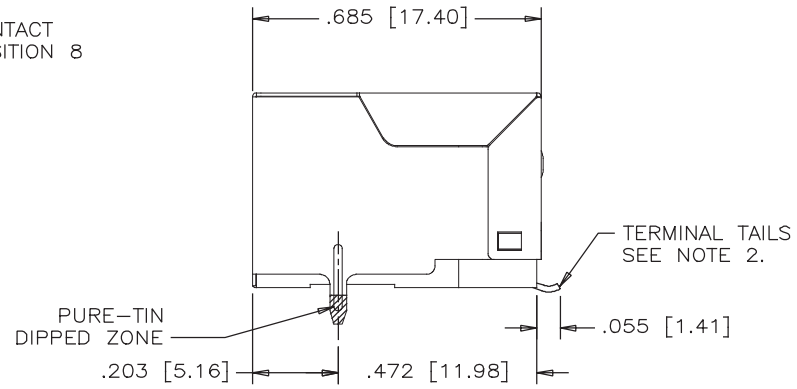

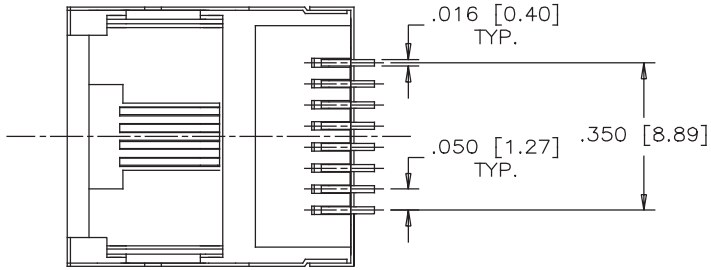

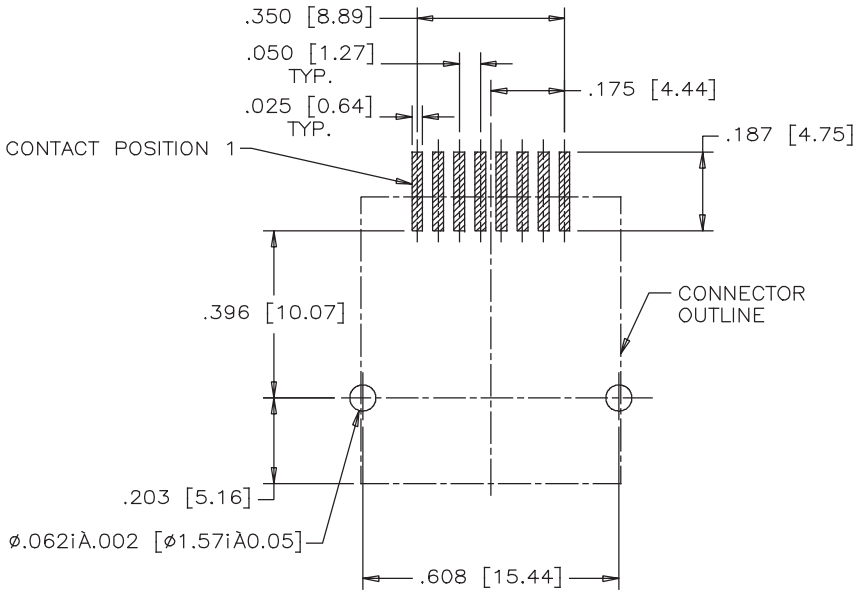

RECOMMENDED P.C.B. LAYOUT
(COMPONENT SIDE OF BOARD)

NOTES:

1. MATERIALS:
   - HOUSING: HIGH TEMPERATURE RESISTANT NYLON. FLAMMABILITY RATING UL 94V–0 COLOUR: RED (PANTONE #201C)
   - CONTACTS: PHOSPHOR BRONZE
   - PLATING: GOLD PLATED REFER TO PART NUMBER ON MATING SURFACES. 50 U" [1.27 MICRONS] MIN. NICKEL UNDERPLATE. 100 U" [2.54 MICRONS] MIN. MATTE–TIN ON CONTACT TAILS.
   - SHIELD: COPPER ALLOY, NICKEL PLATED WITH PURE–TIN DIPPED ON SOLDER TAIL

2. COPLANARITY SPECIFICATION:
   WITH THE MODULAR JACK SITTING ON A LEVEL SURFACE, THE MAXIMUM GAP BETWEEN THE LEVEL SURFACE AND ALL TERMINAL TAILS IS .004 [0.10].

AMPHENOL PART NO.: RJLSE–4X383–01T

GOLD PLATING
0 = 06 u"
1 = 15 u"
2 = 30 u"
3 = 50 u"

DRAWN	J.OUYANG	NOV 13/08
DESIGNED	MT.CHAN	NOV 13/08
CHECKED	L.CHAN	NOV 13/08
I. E. APPRD.		
Q. A. APPRD.		
DWG. APPRD.		
ENG. REL. NO.		
REF.	EAR #13412	
DIMENSIONS ARE IN	INCHES [mm]	
CODE ID. NO.	03554	

Amphenol Canada Corp.

TITLE: SURFACE MOUNT MODULAR JACK ,8 POSITION, 8 CONTACTS, WITH SHIELD,WITH TAPE & REEL PACKAGING–ROHS COMPLIANT

DWG	DRAWING NO.	REV.
	P–RJLSE–4X383–01T	B

SCALE | WT. ——— | SURF. ——— | SHEET 1 OF 2

THIS DOCUMENT CONTAINS PROPRIETARY INFORMATION AND SUCH INFORMATION MAY NOT BE DISCLOSED TO OTHERS FOR ANY PURPOSE OR USED FOR MANUFACTURING PURPOSES WITHOUT WRITTEN PERMISSION FROM AMPHENOL CANADA CORP.

REVISIONS				
SYM	ZONE	ECN, ERN NO.	DATE	APPRD.
A		PROPOSAL	NOV 13/08	L.CHAN
B		FIX THE PACKING QUANTITY	MAR 13/13	L.CHAN

AMPHENOL CANADA CORP
RoHS COMPLIANT
2011/65/EU RECAST

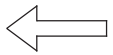

DIRECTION OF CONNECTOR LOADED INTO MACHINE.
LEADS FACING FRONT SIDE

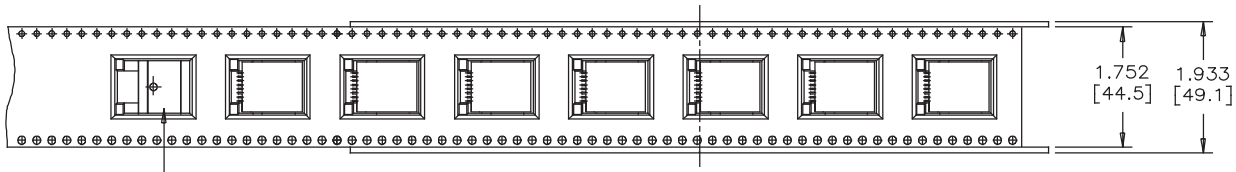

SEE DETAIL 'A' BELOW
FOR CARRIER TAPE DETAIL

TOP VIEW
(COVER TAPE NOT SHOWN)
(SHOWN WITH RJLSE 8 POSITION CONNECTOR)

PACKAGING NOTES:

1. ONE REEL SHOULD HOLD 100 CONNECTORS.
2. 25 EMPTY CAVITIES FOR CARRIER TAPE LEADER & 10 EMPTY CAVITIES FOR CARRIER TAPE TRAILER.
3. A FULLY LOADED CARTON SHOULD CONTAIN 5 REELS (500 PCS) OF CONNECTORS.

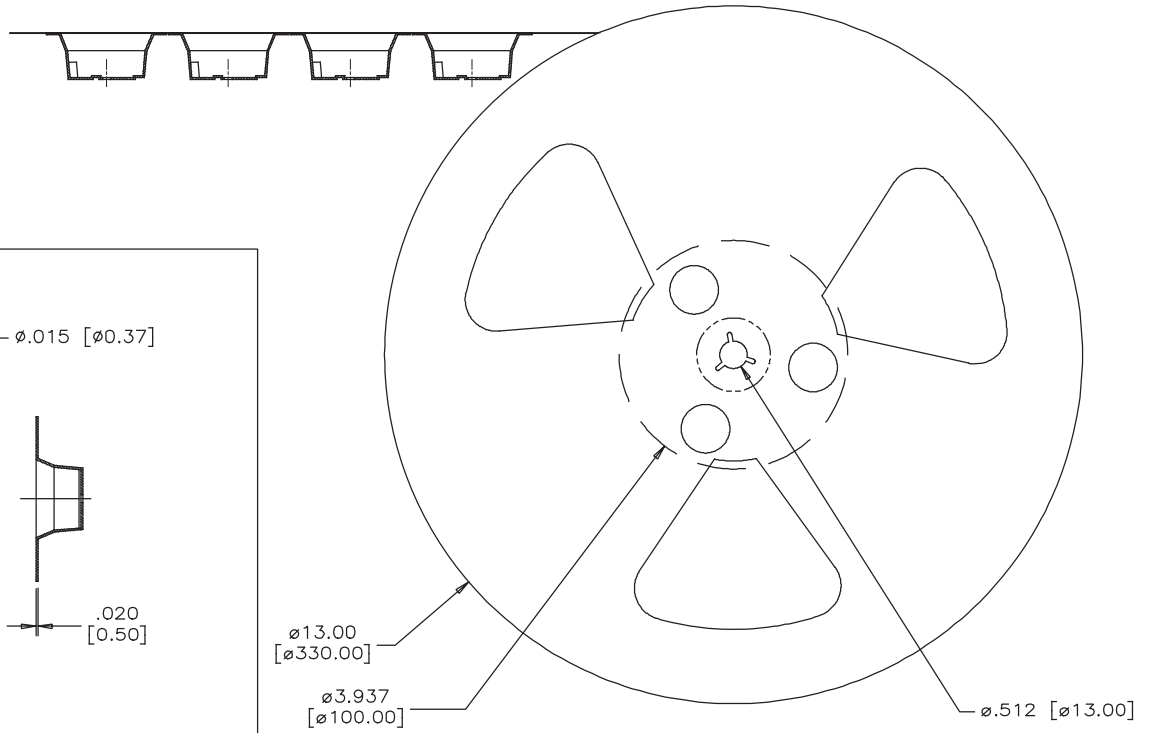

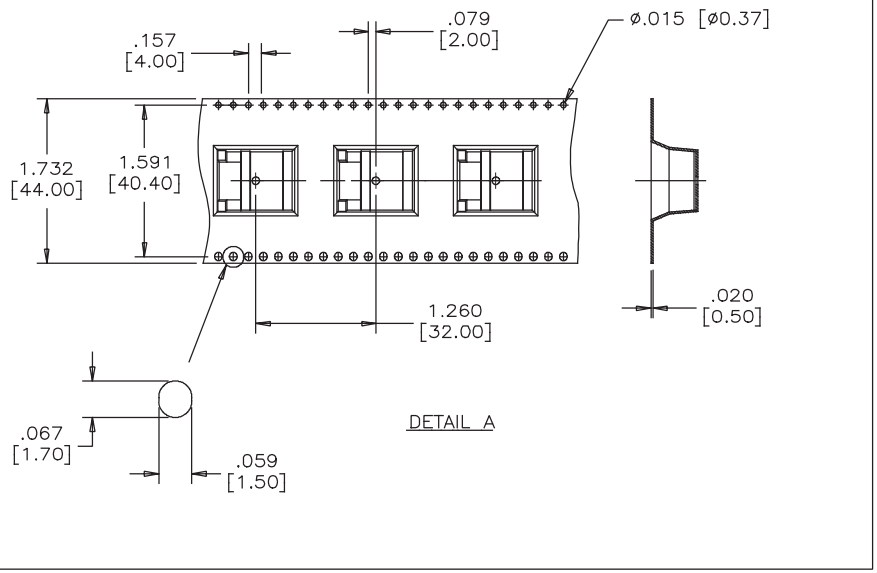

DETAIL A

THIS DOCUMENT CONTAINS PROPRIETARY INFORMATION AND SUCH INFORMATION MAY NOT BE DISCLOSED TO OTHERS FOR ANY PURPOSE OR USED FOR MANUFACTURING PURPOSES WITHOUT WRITTEN PERMISSION FROM AMPHENOL CANADA CORP.

DRAWN	J.OUYANG	DATE NOV 13/08
DESIGNED	MT.CHAN	NOV 13/08
CHECKED	L.CHAN	NOV 13/08
I. E. APPRD.		
Q. A. APPRD.		
DWG. APPRD.		
ENG. REL. NO.		
REF.	EAR #13412	
DIMENSIONS ARE IN	INCHES [mm]	CODE ID. NO. 03554

Amphenol Canada Corp.

TITLE: SURFACE MOUNT MODULAR JACK ,8 POSITION, 8 CONTACTS, WITH SHIELD,WITH TAPE & REEL PACKAGING–ROHS COMPLIANT

DWG	DRAWING NO.	REV.
	P–RJLSE–4X383–01T	B

SCALE NTS | WT. ------ | SURF. ----- | SHEET 2 OF 2