GlobTek, Inc.
www.globtek.com
186 Veterans Drive,
Northvale, NJ 07647
Tel. (201) 784-1000
Fax (201) 784-0111

Drawing Title: FERRITE CORE TYPE: 90B	
Model No. Transformer component	
Part No./Ordering No. 311-00000020(R)	Rev A

In Addition to GlobTek Inc.'s renewed ISO9001:2008 - Quality Management System Certification, GlobTek Inc. is now certified to:

ISO13485:2003 - Medical Devices Quality Management System Certification
ISO14001:2004 - Environmental Management System Certification

ISO Certificates are available online at http://www.globtek.com/iso-certificates/

The acceptance of this specification and use of the product described in this document indicates the acceptance and binding of the customer to Globtek TERMS AND CONDITIONS (attached to the end of this document), which supersede all other agreements, terms, and conditions (http://www.globtek.com/terms-and-conditions/).
Prop 65 Statement:https://www.globtek.com/prop-65-statement.pdf

Footnote:

GlobTek Inc. will not be liable for the safety and performance of these power supplies if unauthorized access and repair occurs. End user should consult applicable UL, CSA or EN standards for proper installation instruction.

Limitation of Use:

GlobTek products are intended for use with commercial, medical, and/or industrial equipment only. GlobTek product are not authorized for use as mission critical components in life support hazardous environment, nuclear or aircraft applications without prior written approval from the CEO of GlobTek Inc.
Contents of this document are subject to change without prior notice.

Customer Approval of Specification:

Please approve, sign and send back to GlobTek so we can complete order processing.
A delay in receipt of this form will delay delivery schedule.

Company Name:	Customer P/N:
Quote Number:	Date:
Authorized Representative Name:	Authorized Representative Signature:

PROPRIETARY INFORMATION
PROPRIETARY OF GLOBTEK, INC. ANY REPRODUCTION, DISCLOSURE OR USE OF THIS DRAWING, IN WHOLE OR IN PART, IS HEREBY PROHIBITED EXCEPT AS SPECIFIED IN WRITING BY GLOBTEK, INC. © GlobTek, Inc. 2018 - 2026
guest /10/24/2026 4:29:59 AM

GlobTek, Inc.
www.globtek.com
186 Veterans Drive,
Northvale, NJ 07647
Tel. (201) 784-1000
Fax (201) 784-0111

Drawing Title: FERRITE CORE TYPE: 90B	
Model No. Transformer component	
Part No./Ordering No. 311-00000020(R)	Rev A

REVISION HISTORY

REV	DESCRIPTION	SUB	DATE	APPROVED
A	Initial release	QA	03/07/2025	QA

AGENCY ONLINE DOCUMENTS	
RoHS/RoHS3 Declaration	https://www.globtek.com/dcs/SPJ8VNR/xWwFLnJZym74eAz12ntBcg
REACH Declaration	https://www.globtek.com/r2/eM2co8
Conflict Minerals Declaration	https://www.globtek.com/r2/SNw6P3
Prop 65 Statement	https://www.globtek.com/r2/VMPRnr

IPXY rating is based on 3rd party testing and customers should check suitability and test system level IPXY rating before ordering.

FERRITE CORE TYPE: 90B

DIMENSION (UNIT : m/m)

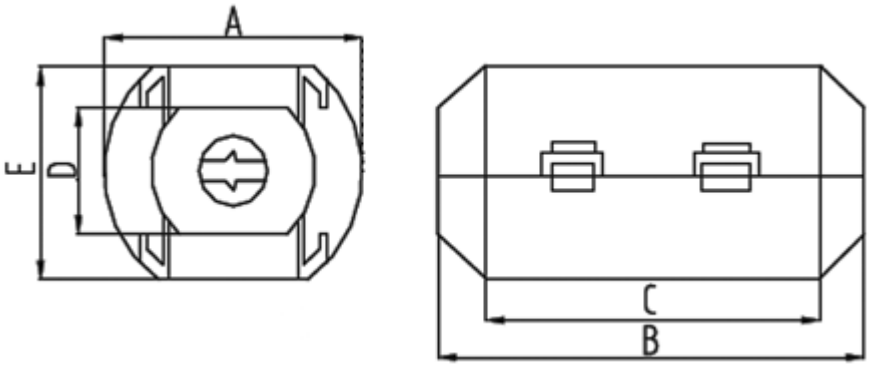

A	20 + \ - 1.0 m/m
B	35 + \ - 1.0 m/m
C	28 + \ - 1.0 m/m
D	9.5 + \ - 1.0 m/m
E	18 + \ - 1.0 m/m

ELECTRICAL REQUIREMENTS : Impedance (Min.) / Ω

Z1	72 (0 to 25MHz)
Z2	110 (0 to 100MHz)

PROPRIETARY INFORMATION
PROPRIETARY OF GLOBTEK, INC. ANY REPRODUCTION, DISCLOSURE OR USE OF THIS DRAWING, IN WHOLE OR IN PART, IS HEREBY PROHIBITED EXCEPT AS SPECIFIED IN WRITING BY GLOBTEK, INC. © GlobTek, Inc. 2018 - 2026
guest /10/24/2026 4:29:59 AM

GlobTek, Inc.
www.globtek.com
186 Veterans Drive,
Northvale, NJ 07647
Tel. (201) 784-1000
Fax (201) 784-0111

Drawing Title: FERRITE CORE TYPE: 90B	
Model No. Transformer component	
Part No./Ordering No. 311-00000020(R)	Rev A

MATERIAL CHARACTERISTICS GRAPH (for reference only)
Curie Temperature: 130 °C

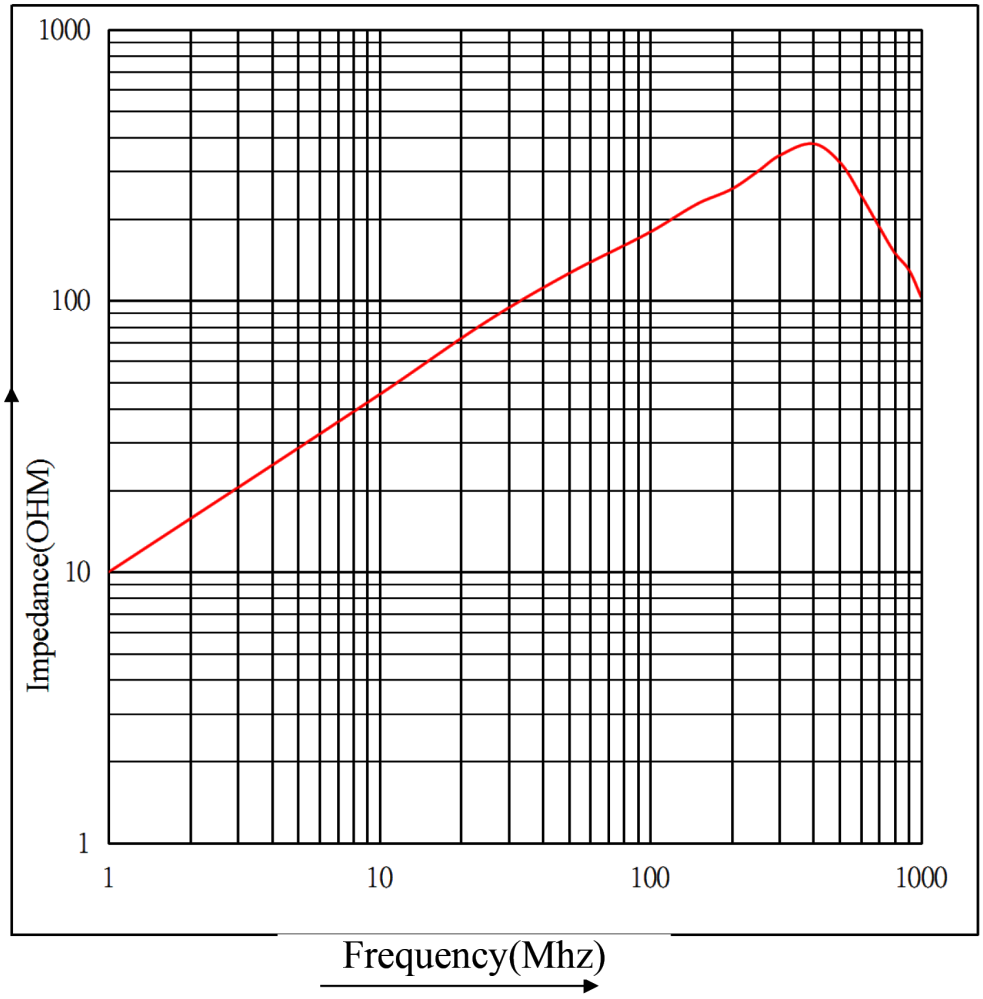

PROPRIETARY INFORMATION
PROPRIETARY OF GLOBTEK, INC. ANY REPRODUCTION, DISCLOSURE OR USE OF THIS DRAWING, IN WHOLE OR IN PART, IS HEREBY PROHIBITED EXCEPT AS SPECIFIED IN WRITING BY GLOBTEK, INC. © GlobTek, Inc. 2018 - 2026
guest /10/24/2026 4:29:59 AM

GlobTek, Inc. www.globtek.com 186 Veterans Drive, Northvale, NJ 07647 Tel. (201) 784-1000 Fax (201) 784-0111	Drawing Title: FERRITE CORE TYPE: 90B	
	Model No. Transformer component	
	Part No./Ordering No. 311-00000020(R)	Rev A

Note:

1. Outside carton: 6mm corrugated fiberboard, dim. measured exterior face
2. Partition: 3mm corrugated fiberboard
3. Gift box: 3mm corrugated fiberboard, no printing on the outside.
4. Actual dim. of outside carton subject to change at time of manufacture.

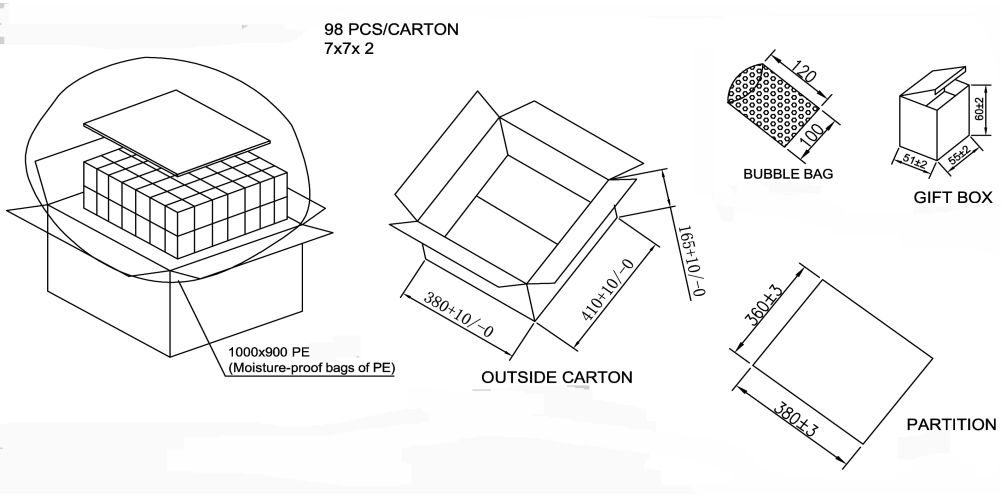

PROPRIETARY INFORMATION
PROPRIETARY OF GLOBTEK, INC. ANY REPRODUCTION, DISCLOSURE OR USE OF THIS DRAWING, IN WHOLE OR IN PART, IS HEREBY PROHIBITED EXCEPT AS SPECIFIED IN WRITING BY GLOBTEK, INC. © GlobTek, Inc. 2018 - 2026
guest /10/24/2026 4:29:59 AM

GlobTek, Inc.
www.globtek.com
186 Veterans Drive,
Northvale, NJ 07647
Tel. (201) 784-1000
Fax (201) 784-0111

Drawing Title: FERRITE CORE TYPE: 90B	
Model No. Transformer component	
Part No./Ordering No. 311-00000020(R)	Rev A

PACKAGING

Packing Spec P/N:	Ferrite packing 311-000000XX(R)
Box Qty:	98
Gift Box Size (mm):	60*55*51
Gift Box Color:	White
Master Carton Size (mm):	410 x 380 x 165
Master Carton Cubic Volume (m^3):	0.03
Master GW (Kg):	kg
wt Ea. (Kg):	kg
wt Ea. (Kg):	kg

LABEL SPECS: Standard GT,L-1186

PACK SPEC: Ferrite packing 311-000000XX(R)

PROPRIETARY INFORMATION
PROPRIETARY OF GLOBTEK, INC. ANY REPRODUCTION, DISCLOSURE OR USE OF THIS DRAWING, IN WHOLE OR IN PART, IS HEREBY PROHIBITED EXCEPT AS SPECIFIED IN WRITING BY GLOBTEK, INC. © GlobTek, Inc. 2018 - 2026
guest /10/24/2026 4:29:59 AM