THE INFORMATION CONTAINED HEREIN IS CONSIDERED "PROPRIETARY" TO BEL FUSE INC. AND SHALL NOT BE COPIED, REPRODUCED OR DISCLOSED WITHOUT THE WRITTEN APPROVAL OF BEL FUSE INC.

RoHS

ELECTRICAL SPECIFICATIONS

(pin 11 - RJ1),(pin 10 - RJ2),(pin 4 - RJ3),(pin 5 - RJ6), CONTINUITY

(pin 3 - RJ4),(pin 2 - RJ5), (pin 8 - RJ7), (pin 9 - RJ8), CONTINUITY

USB ELECTRICAL:

INSULATION RESISTANCE:	1000 MEGΩ(MIN)
CONTACT RESISTANCE:	25 MILLIΩ(MAX)
DIELECTRIC WITHSTANDING:	750 VAC

SCHEMATIC

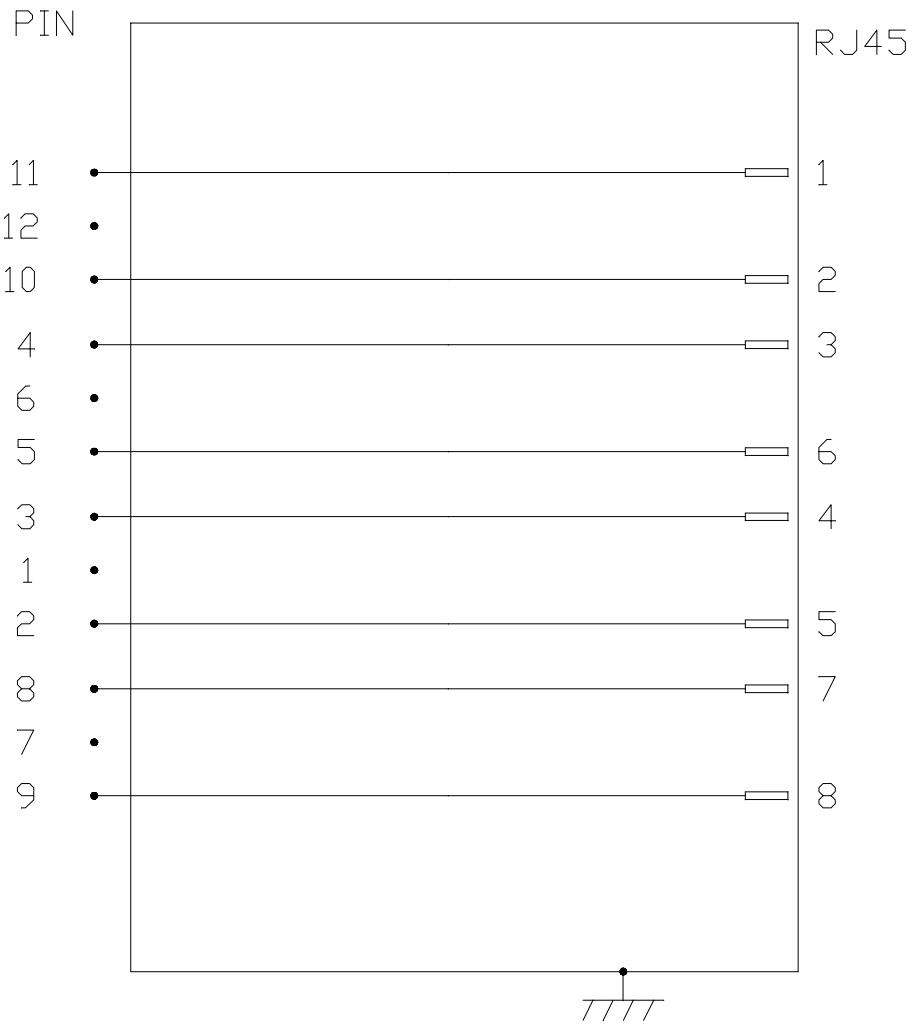

ORIGINATED BY: CHOW WANCHUNG DATE: 2014-12-19	TITLE: Passive Combo Connector 0820-1X1T-00-F	PART NO. / DRAWING NO.: 08201X1T00-F	STANDARD DIM. TOL. IN INCH	[ ] METRIC DIM. AS REF.	REV. : B / PAGE : 2
DRAWN BY: HU XIANG DATE: 2014-12-19		FILE NAME: 08201X1T00-F_B.DWG	.X / .XX / .XXX	UNIT : INCH [mm] SCALE : N/A SIZE : A4	bel MAGNETIC SOLUTIONS a bel group

This document is electronically generated. This is a controlled copy if used internally

Please read our datasheet & drawing disclaimer here.

THE INFORMATION CONTAINED HEREIN IS CONSIDERED "PROPRIETARY" TO BEL FUSE INC. AND SHALL NOT BE COPIED, REPRODUCED OR DISCLOSED WITHOUT THE WRITTEN APPROVAL OF BEL FUSE INC.

MECHANICAL SPECIFICATION

RoHS

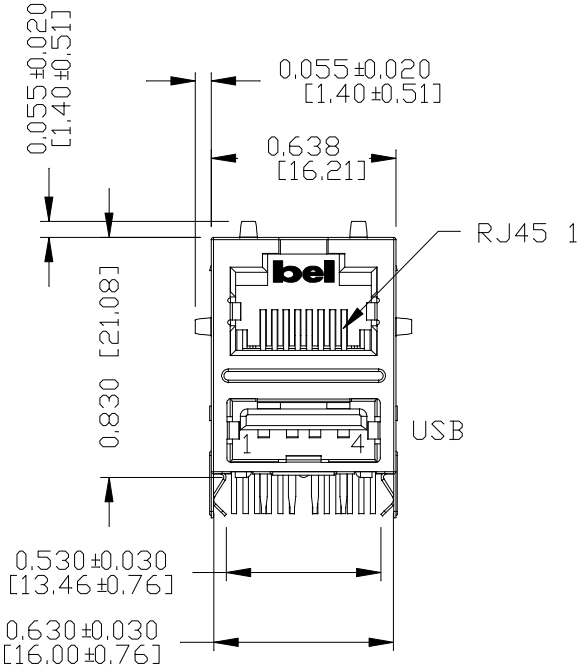

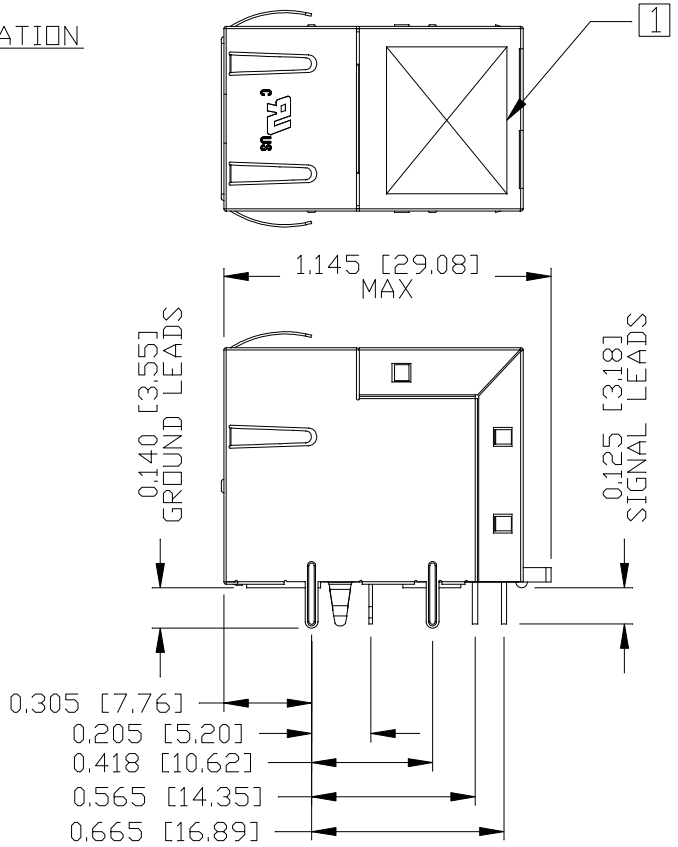

RJ45 MECHANICAL:

PLASTIC HOUSING:	THERMOPLASTIC PBT FLAMMABILITY RATING UL 94V-0
CONTACT PLATING:	30 MICRO-INCH HARD GOLD PLATING OR EQUIVALENT
PINS:	TIN-COATED COPPER WIRE, DIA 0.018 INCH.
METAL SHIELD:	NICKEL PLATED ON COPPER ALLOY. (ALL GROUND LEADS ARE SOLDER DIPPED)

1. MARK PART WITH MFG LOGO, MFG NAME, PART NUMBER, DATE CODE.
2. THE PRODUCT IS RoHS COMPLIANT.

c UL us UL RECOGNIZED - FILE #E196366 AND E169987.

USB MECHANICAL:

MATING FORCE:	35 NEWTONS MAXIMUM
UNMATING FORCE:	10 NEWTONS MINIMUM
CONTACT:	PROSPHER BRONZE GOLD PLATING ON CONTACT AREA AND TIN ON SOLDER TAIL. 30 MICRO-INCH GOLD PLATING ON CONTACT AREA

REV. : B | PAGE : 3

ORIGINATED BY: ANTON LIAO DATE: 2014-12-19	TITLE: Passive Combo Connector 0820-1X1T-00-F	PART NO. / DRAWING NO.: 08201X1T00-F FILE NAME: 08201X1T00-F_B.DWG	STANDARD DIM. TOL. IN INCH: .X, .XX, .XXX ±0.010 [ ] METRIC DIM. AS REF. UNIT : INCH [mm] SCALE : N/A SIZE : A4
DRAWN BY: JESSE LI DATE: 2014-12-19			

bel MAGNETIC SOLUTIONS
a bel group

This document is electronically generated. This is a controlled copy if used internally

THE INFORMATION CONTAINED HEREIN IS CONSIDERED "PROPRIETARY" TO BEL FUSE INC. AND SHALL NOT BE COPIED, REPRODUCED OR DISCLOSED WITHOUT THE WRITTEN APPROVAL OF BEL FUSE INC.

RoHS

RECOMMENDED PCB FOOTPRINT
COMPONENT SIDE VIEW

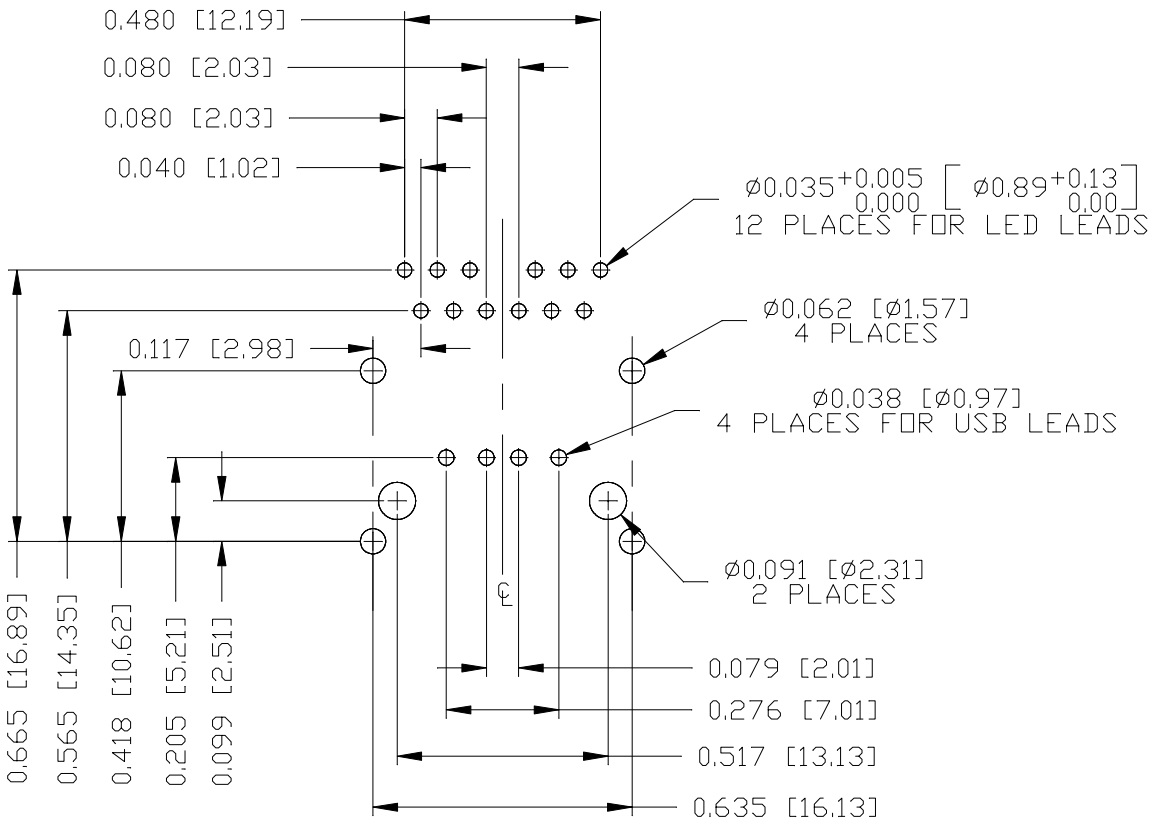

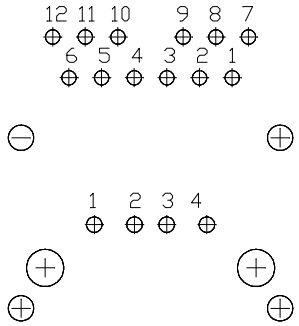

ORIGINATED BY ANTON LIAO DATE 2014-12-19	TITLE Passive Combo Connector 0820-1X1T-00-F	PART NO. / DRAWING NO. 08201X1T00-F	REV. : B
DRAWN BY JESSE LI DATE 2014-12-19		FILE NAME 08201X1T00-F_B.DWG	PAGE : 4

STANDARD DIM. TOL. IN INCH		[ ] METRIC DIM. AS REF.
.X		UNIT : INCH [mm]
.XX		SCALE : N/A
.XXX	±0.004	SIZE : A4

bel MAGNETIC SOLUTIONS
a bel group

This document is electronically generated. This is a controlled copy if used internally

THE INFORMATION CONTAINED HEREIN IS CONSIDERED "PROPRIETARY" TO BEL FUSE INC. AND SHALL NOT BE COPIED, REPRODUCED OR DISCLOSED WITHOUT THE WRITTEN APPROVAL OF BEL FUSE INC.

RoHS

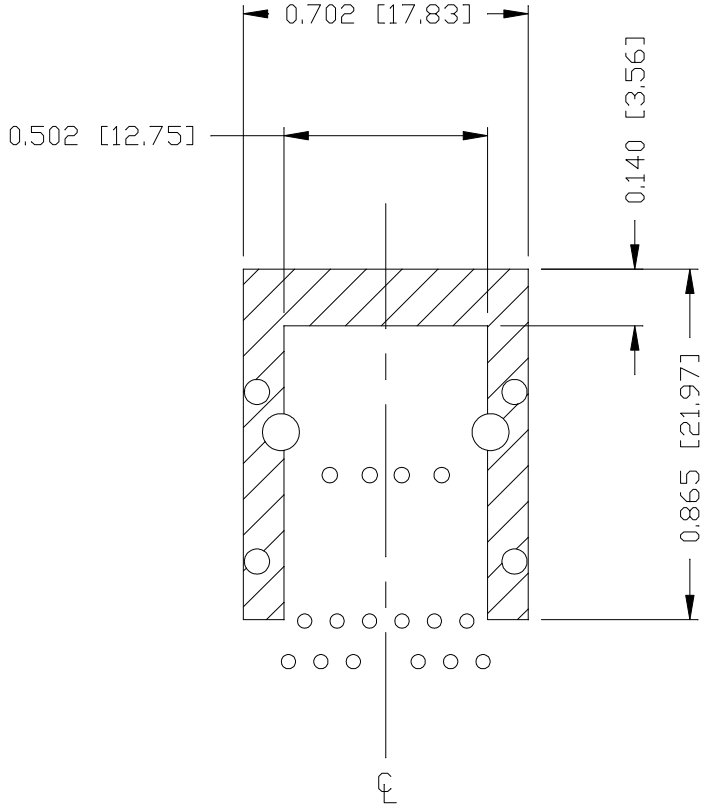

NOTES

THE SHADED AREA ON THE CUSTOMER BOARD ARE RECOMMENDED TO BE CLEAR OFF ANY VIA HOLE OR COMPONENT PAD.

				REV. : B	PAGE : 5
ORIGINATED BY ANTON LIAO DATE 2014-12-19	TITLE Passive Combo Connector 0820-1X1T-00-F	PART NO. / DRAWING NO. 08201X1T00-F	STANDARD DIM. TOL. IN INCH	[ ] METRIC DIM. AS REF.	bel MAGNETIC SOLUTIONS a bel group
DRAWN BY JESSE LI DATE 2014-12-19		FILE NAME 08201X1T00-F_B.DWG	.X / .XX / .XXX ±0.004	UNIT : INCH [mm] SCALE : N/A SIZE : A4	

This document is electronically generated. This is a controlled copy if used internally

THE INFORMATION CONTAINED HEREIN IS CONSIDERED "PROPRIETARY" TO BEL FUSE INC. AND SHALL NOT BE COPIED, REPRODUCED OR DISCLOSED WITHOUT THE WRITTEN APPROVAL OF BEL FUSE INC.

RoHS

SUGGESTED PANEL OPENING

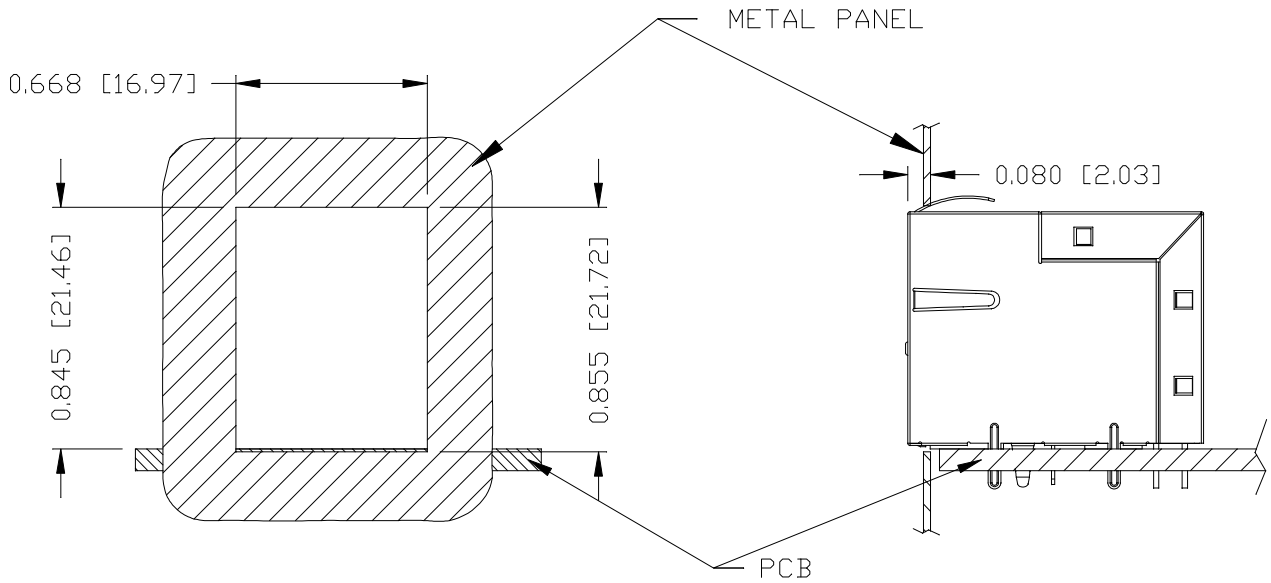

NOTES:

THE DISTANCE OF PANEL INSIDE SURFACE RELATIVE TO FRONT SURFACE OF PART IS ONLY A SUGGESTION. IN CASE THIS DISTANCE IS DIFFERENT, THE REQUIRED PANEL OPENING DIMENSIONS CHANGE ACCORDINGLY.

PACKING INFORMATION

PACKING TRAY : 0200-0148-48 (TOP)
0200-0148-49 (BOTTOM)

PACKING QUANTITY : 60 PCS FINISHED GOODS PER TRAY
8 TRAYS (480 PCS FINISHED GOODS) PER CARTON BOX

NOTE : CARDBOARDS ARE PLACED BETWEEN LAYERS OF PACKING TRAY INSIDE CARTON BOX (INCLUDE THE UPPERMOST AND LOWERMOST TRAY)

ORIGINATED BY ANTON LIAO DATE 2014-12-19	TITLE Passive Combo Connector 0820-1X1T-00-F	PART NO. / DRAWING NO. 08201X1T00-F	STANDARD DIM. TOL. IN INCH		[ ] METRIC DIM. AS REF.
DRAWN BY JESSE LI DATE 2014-12-19		FILE NAME 08201X1T00-F_B.DWG	.X		UNIT : INCH [mm]
			.XX		SCALE : N/A
			.XXX	±0.004	SIZE : A4

bel MAGNETIC SOLUTIONS
a bel group

This document is electronically generated. This is a controlled copy if used internally