Transfer or duplication of this document as well as the utilization or communication of its contents are prohibited unless explicit authorization is granted. Violations will be liable for compensation. All rights reserved for patent, utility model or designs registrations. 除非给予明确授权，否则禁止转让、复制、利用、交流本文件的内容。侵犯者将负赔偿责任。本公司保留对涉及发明、实用新型和外观专利的所有权利。

please refer to the 3D model, for those unmarked dimensions

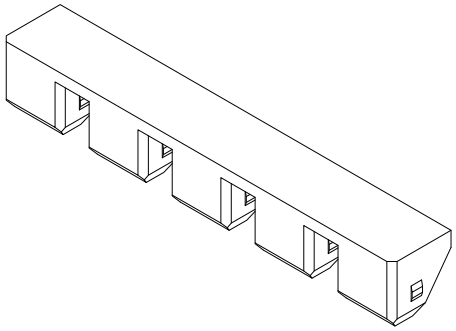

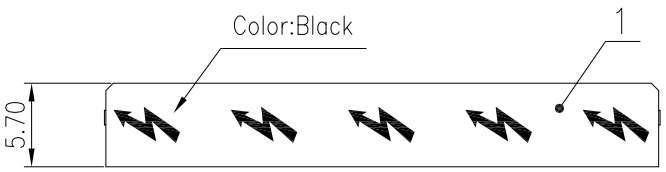

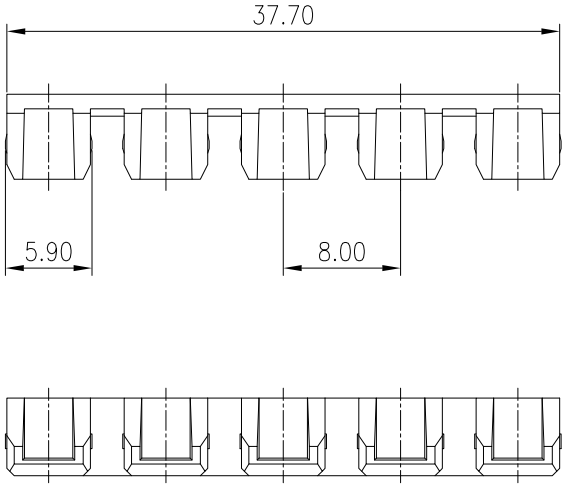

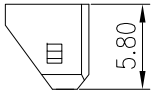

未注公差/General tolerances(mm)														
0 ~ 3	>3 ~ 6	>6 ~ 10	>10 ~ 18	>18 ~ 30	>30 ~ 50	>50 ~ 80	>80 ~ 120	>120 ~ 180	>180 ~ 250	>250 ~ 315	>315 ~ 400	>400 ~ 500	>500	0.1/10
±0.12	±0.18	±0.22	±0.26	±0.31	±0.37	±0.57	±0.80	±0.93	±1.05	±1.15	±1.60	±2.20	±2.50	±2°

Cut the layout

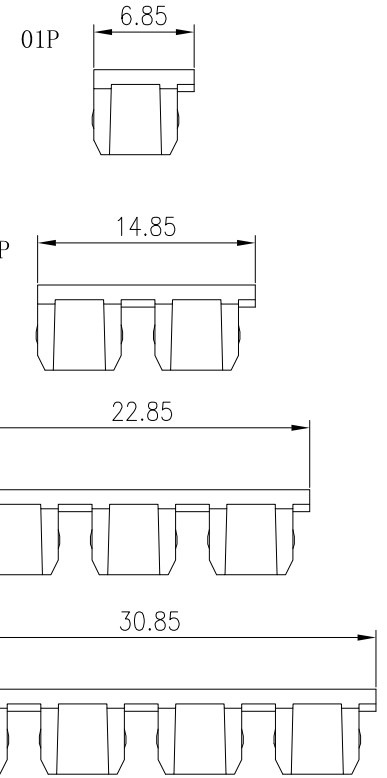

ITEM	NAME OF PART	MATERIAL	NOTES
1	Housing	PA66	UL94V-0

线数范围/Poles	N=01~05P
使用温度范围/Operating temperature(°C)	-40~+105
符合RoHS环保要求/Conform to RoHS	Yes

MATERIAL: /		SURFACE: /	
MAT NO.:	DEGSON®	宁波高松电子有限公司 NINGBO DEGSON ELECTRICAL CO., LTD	
STATUS: /	NAME:	EEA6-XXP-1Y-00L(H)	
APPD: Li GL 2021.02.23			
CHKD: MaEK 2021.02.23			
DRFT: WangW 2021.02.02	DRAWING NO.: EEA6-C01	REV	T0
SIZE: A4 mm (inch)	TYPE: CUSTOMER DRAWING	SCALE: 2:1	SHEET 1/1

REV	ECN	DESCRIPTION	DRFT	DATE